Hill International North Africa Ltd.
Plot 140, NCFC Building,
Banks Zone, 1st District,
Fifth Settlement, New Cairo,
Cairo, Egypt
Tel: +202 2322 0000
Fax: +202 2322 0022
www.hillintl.com

Date: January 4, 2025

Ref: PEG-1155-93M-CN-HI-BOA-LET-RS-11881
Jean Marc Decloquement
Consortium Director
Blocks 277-278,2nd business sector,
Teseen st, Shaker Consultancy Building
New Cairo, Egypt.

Project: Engineering, Procurement and Construction of the New Administrative Capital Monorail and 6th October City Monorail (Contract 93/Metro).

Subject: Comments on shop drawings. // 93M-BOA-NAT-LOT- 28937

References:

1. Hill's Letter ref. PEG-1155-93M-CN-HI-BOA-LET-JB-0164
2. Hill's Letter no- PEG-1155-93M-CN-HI-BOA-LET-JB-0205
3. Contractor's Transmittal ref. 93M-BOA-NAT-LOT-28937

Dear Sir,

We note that the below shop drawings (in the Annexure) were uploaded on Aconex with status "closed". We note that there are some comments within the drawings needed to be addressed before commencing the site work.

The comments on the shop drawings as per attached annexure.

The Contractor is advised to correct the above into the shop drawings before any issuance to his site staff.

The Contractor is hereby further notified that in any such eventuality of rework, dismantling of constructed structure on account of such omission on the part of Contractor, it will be to Contractor's account and we re-iterate that any deviations from the approved drawings will triggers withholding from the upcoming payments pursuant to Sub-Clause 14.6 (b) of Conditions of Contract.

For and on behalf of
Hill International (Africa) Ltd

Navendu Lad
Acting Project Director
Attachments:

1. Comments table.
2. Stamped Drawings listed in the attached "Comments table".

Initial /reviewed by: RS
Reply Required: (X) Yes ( ) No
Cc: NAT

DELIVERING THE INFRASTRUCTURE OF CHANGE

93M-BOA-NAT-LOT-28937

S. No.	Drawing no	Comments
1	93M-0407-ACC-60L11-DWG-90001-A	- It is the contractor responsibility to ensure and revise all Dimensions and levels with the approved design drawings besides the coordination package before commencing any site Works. Approval is subjected to the approval of coordination package between multi-discipline.
2	93M-0407-ACC-60L11-DWG-90002-A	Approval is subjected to the approval of coordination package between multi-discipline.
3	93M-0407-ACC-60L11-DWG-90003-A	Approval is subjected to the approval of coordination package between multi-discipline.
4	93M-0407-ACC-60L11-DWG-90004-A	Approval is subjected to the approval of coordination package between multi-discipline.
5	93M-0407-ACC-60L11-DWG-90005-A	-Profile is not matching with the design reference. 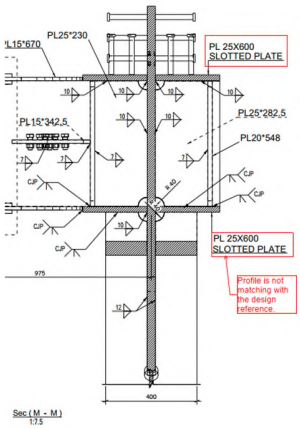 -Please clarify. 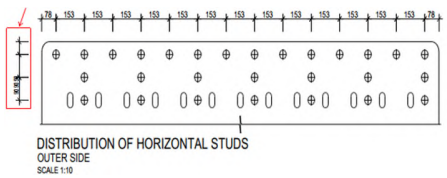
6	93M-0407-ACC-60L11-DWG-90006-A	-Profile is not matching with the design reference.

		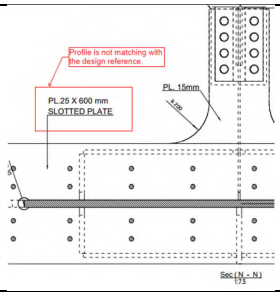
7	93M-0407-ACC-60L11-DWG-90007-A	-Bearings should be submitted to be revised and approved, before being supplied. Contractor is responsible for closing this comment. 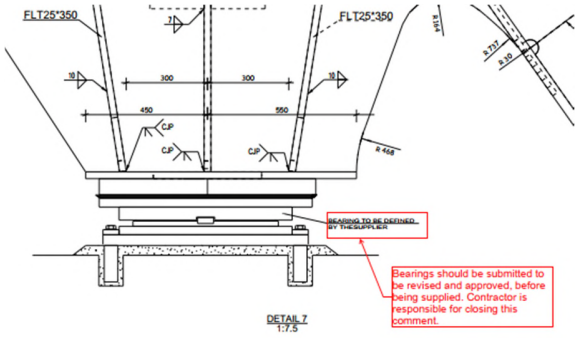
8	93M-0407-ACC-60L11-DWG-90008-A	-Bearings should be submitted to be revised and approved, before being supplied. Contractor is responsible for closing this comment. 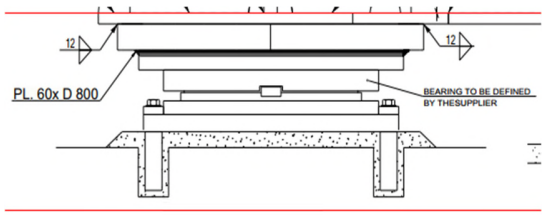 -PL25*600. 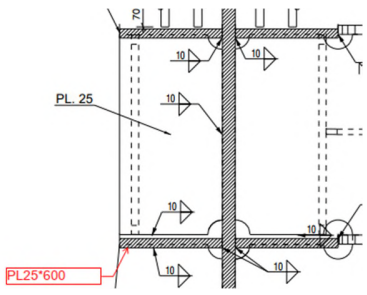 -PL25*185 Both sides

		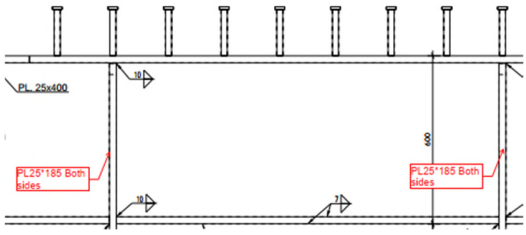
9	93M-0407-ACC-60L11-DWG-90009-A	-The connection is not matching with the design reference. 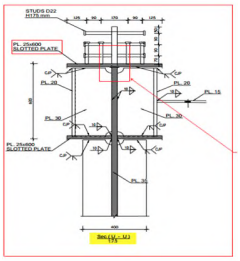 -kindly provide the location of the highlighted connections. 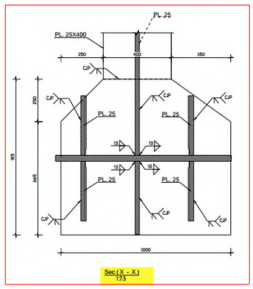 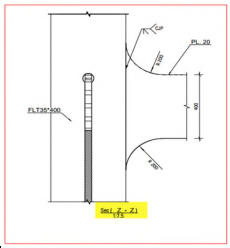 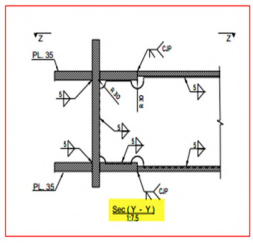
10	93M-0407-ACC-60L11-DWG-90010-A	Approval is subjected to the approval of coordination package between multi-discipline.
11	93M-0407-ACC-60L11-DWG-90011-A	Approval is subjected to the approval of coordination package between multi-discipline.
12	93M-0407-ACC-60L11-DWG-90012-A	Approval is subjected to the approval of coordination package between multi-discipline.
13	93M-0407-ACC-60L11-DWG-90013-A	Highlighted items have a material that is not matching with the design reference.

		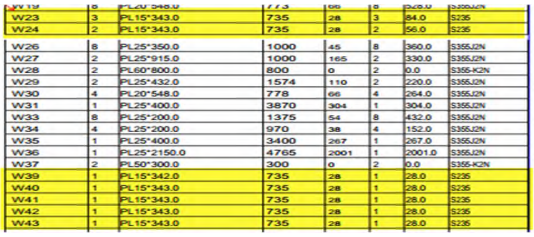
14	93M-0407-ACC-60L11-DWG-90014-A	-Drawing shall be updated according to the comments on the GA drawing. -Approval is subjected to the approval of coordination package between multi-discipline.
15	93M-0407-ACC-60L11-DWG-90015-A	-Drawing shall be updated according to the comments on the GA drawing. -Approval is subjected to the approval of coordination package between multi-discipline.
16	93M-0407-ACC-60L11-DWG-90016-A	-Drawing shall be updated according to the comments on the GA drawing. -Approval is subjected to the approval of coordination package between multi-discipline.
17	93M-0407-ACC-60L11-DWG-90017-A	Highlighted items have a material that is not matching with the design reference. 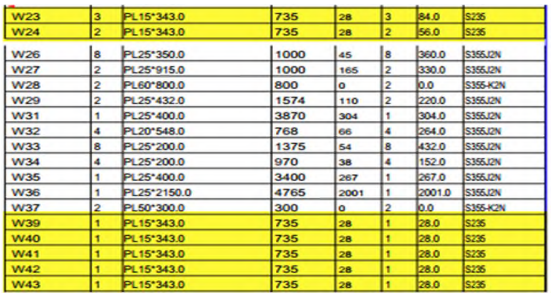
18	93M-0407-ACC-60L11-DWG-90018-A	-Drawing shall be updated according to the comments on the GA drawing. -Approval is subjected to the approval of coordination package between multi-discipline.
19	93M-0407-ACC-60L11-DWG-90019-A	-Drawing shall be updated according to the comments on the GA drawing. -Approval is subjected to the approval of coordination package between multi-discipline.
20	93M-0407-ACC-60L11-DWG-90020-A	-Drawing shall be updated according to the comments on the GA drawing. -Approval is subjected to the approval of coordination package between multi-discipline.
21	93M-0407-ACC-60L11-DWG-90021-A	Highlighted items have a material that is not matching with the design reference.

		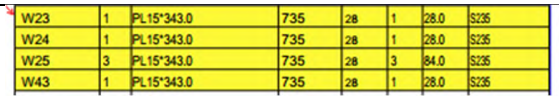
22	93M-0407-ACC-60L11-DWG-90022-A	-Drawing shall be updated according to the comments on the GA drawing. -Approval is subjected to the approval of coordination package between multi-discipline.
23	93M-0407-ACC-60L11-DWG-90023-A	Highlighted items have a material that is not matching with the design reference. 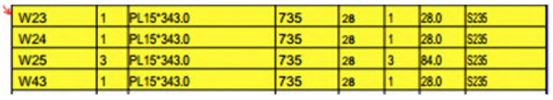
24	93M-0407-ACC-60L11-DWG-90024-A	-Drawing shall be updated according to the comments on the GA drawing. -Approval is subjected to the approval of coordination package between multi-discipline.
25	93M-0407-ACC-60L11-DWG-90025-A	-Drawing shall be updated according to the comments on the GA drawing. -Approval is subjected to the approval of coordination package between multi-discipline. -Please clarify. 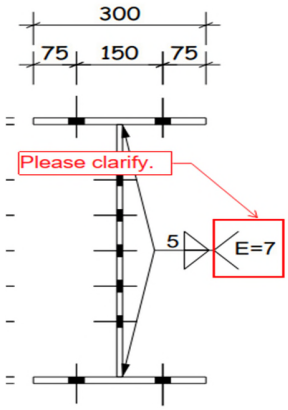
26	93M-0407-ACC-60L11-DWG-90026-A	-Drawing shall be updated according to the comments on the GA drawing. -Approval is subjected to the approval of coordination package between multi-discipline. -Please clarify.

		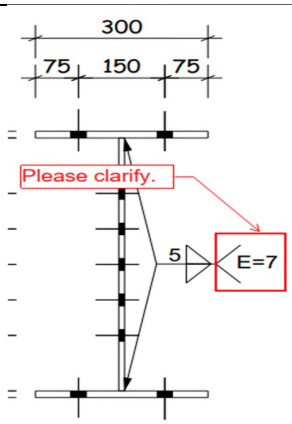
27	93M-0407-ACC-60L11-DWG-90027-A	-Drawing shall be updated according to the comments on the GA drawing. -Approval is subjected to the approval of coordination package between multi-discipline.
28	93M-0407-ACC-60L11-DWG-90028-A	-Drawing shall be updated according to the comments on the GA drawing. -Approval is subjected to the approval of coordination package between multi-discipline.
29	93M-0407-ACC-60L11-DWG-90029-A	-Drawing shall be updated according to the comments on the GA drawing. -Approval is subjected to the approval of coordination package between multi-discipline.
30	93M-0407-ACC-60L11-DWG-90030-A	-Drawing shall be updated according to the comments on the GA drawing. -Approval is subjected to the approval of coordination package between multi-discipline.
31	93M-0407-ACC-60L11-DWG-90031-A	-Drawing shall be updated according to the comments on the GA drawing. -Approval is subjected to the approval of coordination package between multi-discipline.
32	93M-0407-ACC-60L11-DWG-90032-A	-Drawing shall be updated according to the comments on the GA drawing. -Approval is subjected to the approval of coordination package between multi-discipline.
33	93M-0407-ACC-60L11-DWG-90033-A	-Drawing shall be updated according to the comments on the GA drawing. -Approval is subjected to the approval of coordination package between multi-discipline.
34	93M-0407-ACC-60L11-DWG-90034-A	-Drawing shall be updated according to the comments on the GA drawing. -Approval is subjected to the approval of coordination package between multi-discipline.
35	93M-0407-ACC-60L11-DWG-90035-A	-Drawing shall be updated according to the comments on the GA drawing. -Approval is subjected to the approval of

		coordination package between multi-discipline.
36	93M-0407-ACC-60L11-DWG-90036-A	-Drawing shall be updated according to the comments on the GA drawing. -Approval is subjected to the approval of coordination package between multi-discipline.
37	93M-0407-ACC-60L11-DWG-90037-A	-Drawing shall be updated according to the comments on the GA drawing. -Approval is subjected to the approval of coordination package between multi-discipline.
38	93M-0407-ACC-60L11-DWG-90038-A	-Drawing shall be updated according to the comments on the GA drawing. -Approval is subjected to the approval of coordination package between multi-discipline.
39	93M-0407-ACC-60L11-DWG-90039-A	-Drawing shall be updated according to the comments on the GA drawing. -Approval is subjected to the approval of coordination package between multi-discipline.
40	93M-0407-ACC-60L11-DWG-90040-A	-Drawing shall be updated according to the comments on the GA drawing. -Approval is subjected to the approval of coordination package between multi-discipline.
41	93M-0407-ACC-60L11-DWG-90041-A	-Drawing shall be updated according to the comments on the GA drawing. -Approval is subjected to the approval of coordination package between multi-discipline.
42	93M-0407-ACC-60L11-DWG-90042-A	-Drawing shall be updated according to the comments on the GA drawing. -Approval is subjected to the approval of coordination package between multi-discipline.
43	93M-0407-ACC-60L11-DWG-90043-A	-Drawing shall be updated according to the comments on the GA drawing. -Approval is subjected to the approval of coordination package between multi-discipline.
44	93M-0407-ACC-60L11-DWG-90044-A	-Drawing shall be updated according to the comments on the GA drawing. -Approval is subjected to the approval of coordination package between multi-discipline.
45	93M-0407-ACC-60L11-DWG-90045-A	-Drawing shall be updated according to the comments on the GA drawing. -Approval is subjected to the approval of coordination package between multi-discipline.
46	93M-0407-ACC-60L11-DWG-90046-A	-Drawing shall be updated according to the comments on the GA drawing. -Approval is subjected to the approval of coordination package between multi-discipline.

47	93M-0407-ACC-60L11-DWG-90047-A	-Drawing shall be updated according to the comments on the GA drawing. -Approval is subjected to the approval of coordination package between multi-discipline.
48	93M-0407-ACC-60L11-DWG-90048-A	-Drawing shall be updated according to the comments on the GA drawing. -Approval is subjected to the approval of coordination package between multi-discipline.
49	93M-0407-ACC-60L11-DWG-90049-A	-Drawing shall be updated according to the comments on the GA drawing. -Approval is subjected to the approval of coordination package between multi-discipline.
50	93M-0407-ACC-60L11-DWG-90050-A	-Drawing shall be updated according to the comments on the GA drawing. -Approval is subjected to the approval of coordination package between multi-discipline.
51	93M-0407-ACC-60L11-DWG-90051-A	-Drawing shall be updated according to the comments on the GA drawing. -Approval is subjected to the approval of coordination package between multi-discipline.
52	93M-0407-ACC-60L11-DWG-90052-A	-Drawing shall be updated according to the comments on the GA drawing. -Approval is subjected to the approval of coordination package between multi-discipline.
53	93M-0407-ACC-60L11-DWG-90053-A	-Drawing shall be updated according to the comments on the GA drawing. -Approval is subjected to the approval of coordination package between multi-discipline.
54	93M-0407-ACC-60L11-DWG-90054-A	-Drawing shall be updated according to the comments on the GA drawing. -Approval is subjected to the approval of coordination package between multi-discipline.
55	93M-0407-ACC-60L11-DWG-90055-A	-Drawing shall be updated according to the comments on the GA drawing. -Approval is subjected to the approval of coordination package between multi-discipline.
56	93M-0407-ACC-60L11-DWG-90056-A	-Drawing shall be updated according to the comments on the GA drawing. -Approval is subjected to the approval of coordination package between multi-discipline.
57	93M-0407-ACC-60L11-DWG-90057-A	-Drawing shall be updated according to the comments on the GA drawing. -Approval is subjected to the approval of coordination package between multi-discipline.
58	93M-0407-ACC-60L11-DWG-90058-A	-Drawing shall be updated according to the comments on the GA drawing. -Approval is subjected to the approval of

		coordination package between multi-discipline.
59	93M-0407-ACC-60L11-DWG-90059-A	-Drawing shall be updated according to the comments on the GA drawing. -Approval is subjected to the approval of coordination package between multi-discipline.
60	93M-0407-ACC-60L11-DWG-90060-A	-Drawing shall be updated according to the comments on the GA drawing. -Approval is subjected to the approval of coordination package between multi-discipline.
61	93M-0407-ACC-60L11-DWG-90061-A	-Drawing shall be updated according to the comments on the GA drawing. -Approval is subjected to the approval of coordination package between multi-discipline.
62	93M-0407-ACC-60L11-DWG-90062-A	-Drawing shall be updated according to the comments on the GA drawing. -Approval is subjected to the approval of coordination package between multi-discipline.
63	93M-0407-ACC-60L11-DWG-90063-A	-Drawing shall be updated according to the comments on the GA drawing. -Approval is subjected to the approval of coordination package between multi-discipline.
64	93M-0407-ACC-60L11-DWG-90064-A	-Drawing shall be updated according to the comments on the GA drawing. -Approval is subjected to the approval of coordination package between multi-discipline.
65	93M-0407-ACC-60L11-DWG-90065-A	-Drawing shall be updated according to the comments on the GA drawing. -Approval is subjected to the approval of coordination package between multi-discipline.
66	93M-0407-ACC-60L11-DWG-90066-A	-Drawing shall be updated according to the comments on the GA drawing. -Approval is subjected to the approval of coordination package between multi-discipline.
67	93M-0407-ACC-60L11-DWG-90067-A	-Drawing shall be updated according to the comments on the GA drawing. -Approval is subjected to the approval of coordination package between multi-discipline.
68	93M-0407-ACC-60L11-DWG-90068-A	-Drawing shall be updated according to the comments on the GA drawing. -Approval is subjected to the approval of coordination package between multi-discipline.
69	93M-0407-ACC-60L11-DWG-90069-A	-Drawing shall be updated according to the comments on the GA drawing. -Approval is subjected to the approval of coordination package between multi-discipline.

70	93M-0407-ACC-60L11-DWG-90070-A	-Drawing shall be updated according to the comments on the GA drawing. -Approval is subjected to the approval of coordination package between multi-discipline.
71	93M-0407-ACC-60L11-DWG-90071-A	-Drawing shall be updated according to the comments on the GA drawing. -Approval is subjected to the approval of coordination package between multi-discipline.
72	93M-0407-ACC-60L11-DWG-90072-A	-Drawing shall be updated according to the comments on the GA drawing. -Approval is subjected to the approval of coordination package between multi-discipline.
73	93M-0407-ACC-60L11-DWG-90073-A	-Drawing shall be updated according to the comments on the GA drawing. -Approval is subjected to the approval of coordination package between multi-discipline.
74	93M-0407-ACC-60L11-DWG-90074-A	-Drawing shall be updated according to the comments on the GA drawing. -Approval is subjected to the approval of coordination package between multi-discipline.
75	93M-0407-ACC-60L11-DWG-90075-A	-Drawing shall be updated according to the comments on the GA drawing. -Approval is subjected to the approval of coordination package between multi-discipline.
76	93M-0407-ACC-60L11-DWG-90076-A	-Drawing shall be updated according to the comments on the GA drawing. -Approval is subjected to the approval of coordination package between multi-discipline.
77	93M-0407-ACC-60L11-DWG-90077-A	-Drawing shall be updated according to the comments on the GA drawing. -Approval is subjected to the approval of coordination package between multi-discipline.
78	93M-0407-ACC-60L11-DWG-90078-A	-Drawing shall be updated according to the comments on the GA drawing. -Approval is subjected to the approval of coordination package between multi-discipline.
79	93M-0407-ACC-60L11-DWG-90079-A	-Drawing shall be updated according to the comments on the GA drawing. -Approval is subjected to the approval of coordination package between multi-discipline.
80	93M-0407-ACC-60L11-DWG-90080-A	-Drawing shall be updated according to the comments on the GA drawing. -Approval is subjected to the approval of coordination package between multi-discipline.
81	93M-0407-ACC-60L11-DWG-90081-A	-Drawing shall be updated according to the comments on the GA drawing. -Approval is subjected to the approval of

		coordination package between multi-discipline.
82	93M-0407-ACC-60L11-DWG-90082-A	-Drawing shall be updated according to the comments on the GA drawing. -Approval is subjected to the approval of coordination package between multi-discipline.
83	93M-0407-ACC-60L11-DWG-90083-A	-Drawing shall be updated according to the comments on the GA drawing. -Approval is subjected to the approval of coordination package between multi-discipline.
84	93M-0407-ACC-60L11-DWG-90084-A	-Drawing shall be updated according to the comments on the GA drawing. -Approval is subjected to the approval of coordination package between multi-discipline.
85	93M-0407-ACC-60L11-DWG-90085-A	-Drawing shall be updated according to the comments on the GA drawing. -Approval is subjected to the approval of coordination package between multi-discipline.
86	93M-0407-ACC-60L11-DWG-90086-A	-Drawing shall be updated according to the comments on the GA drawing. -Approval is subjected to the approval of coordination package between multi-discipline.
87	93M-0407-ACC-60L11-DWG-90087-A	-Drawing shall be updated according to the comments on the GA drawing. -Approval is subjected to the approval of coordination package between multi-discipline.
88	93M-0407-ACC-60L11-DWG-90088-A	-Drawing shall be updated according to the comments on the GA drawing. -Approval is subjected to the approval of coordination package between multi-discipline.
89	93M-0407-ACC-60L11-DWG-90089-A	-Drawing shall be updated according to the comments on the GA drawing. -Approval is subjected to the approval of coordination package between multi-discipline.
90	93M-0407-ACC-60L11-DWG-90090-A	-Drawing shall be updated according to the comments on the GA drawing. -Approval is subjected to the approval of coordination package between multi-discipline.
91	93M-0407-ACC-60L11-DWG-90091-A	-Drawing shall be updated according to the comments on the GA drawing. -Approval is subjected to the approval of coordination package between multi-discipline.
92	93M-0407-ACC-60L11-DWG-90092-A	-Drawing shall be updated according to the comments on the GA drawing. -Approval is subjected to the approval of coordination package between multi-discipline.

93	93M-0407-ACC-60L11-DWG-90093-A	-Drawing shall be updated according to the comments on the GA drawing. -Approval is subjected to the approval of coordination package between multi-discipline.
94	93M-0407-ACC-60L11-DWG-90094-A	-Drawing shall be updated according to the comments on the GA drawing. -Approval is subjected to the approval of coordination package between multi-discipline.
95	93M-0407-ACC-60L11-DWG-90095-A	-Drawing shall be updated according to the comments on the GA drawing. -Approval is subjected to the approval of coordination package between multi-discipline.
96	93M-0407-ACC-60L11-DWG-90096-A	-Drawing shall be updated according to the comments on the GA drawing. -Approval is subjected to the approval of coordination package between multi-discipline.
97	93M-0407-ACC-60L11-DWG-90097-A	-Drawing shall be updated according to the comments on the GA drawing. -Approval is subjected to the approval of coordination package between multi-discipline.
98	93M-0407-ACC-60L11-DWG-90098-A	-Drawing shall be updated according to the comments on the GA drawing. -Approval is subjected to the approval of coordination package between multi-discipline.
99	93M-0407-ACC-60L11-DWG-90099-A	-Drawing shall be updated according to the comments on the GA drawing. -Approval is subjected to the approval of coordination package between multi-discipline.
100	93M-0407-ACC-60L11-DWG-90100-A	-Drawing shall be updated according to the comments on the GA drawing. -Approval is subjected to the approval of coordination package between multi-discipline.
101	93M-0407-ACC-60L11-DWG-90101-A	-Drawing shall be updated according to the comments on the GA drawing. -Approval is subjected to the approval of coordination package between multi-discipline.
102	93M-0407-ACC-60L11-DWG-90102-A	-Drawing shall be updated according to the comments on the GA drawing. -Approval is subjected to the approval of coordination package between multi-discipline.
103	93M-0407-ACC-60L11-DWG-90103-A	-Drawing shall be updated according to the comments on the GA drawing. -Approval is subjected to the approval of coordination package between multi-discipline.
104	93M-0407-ACC-60L11-DWG-90104-A	-Drawing shall be updated according to the comments on the GA drawing. -Approval is subjected to the approval of

		coordination package between multi-discipline.
105	93M-0407-ACC-60L11-DWG-90105-A	-Drawing shall be updated according to the comments on the GA drawing. -Approval is subjected to the approval of coordination package between multi-discipline.
106	93M-0407-ACC-60L11-DWG-90106-A	-Drawing shall be updated according to the comments on the GA drawing. -Approval is subjected to the approval of coordination package between multi-discipline.
107	93M-0407-ACC-60L11-DWG-90107-A	-Drawing shall be updated according to the comments on the GA drawing. -Approval is subjected to the approval of coordination package between multi-discipline.
108	93M-0407-ACC-60L11-DWG-90108-A	-Drawing shall be updated according to the comments on the GA drawing. -Approval is subjected to the approval of coordination package between multi-discipline.
109	93M-0407-ACC-60L11-DWG-90109-A	-Drawing shall be updated according to the comments on the GA drawing. -Approval is subjected to the approval of coordination package between multi-discipline.
110	93M-0407-ACC-60L11-DWG-90110-A	-Drawing shall be updated according to the comments on the GA drawing. -Approval is subjected to the approval of coordination package between multi-discipline.
111	93M-0407-ACC-60L11-DWG-90111-A	-Drawing shall be updated according to the comments on the GA drawing. -Approval is subjected to the approval of coordination package between multi-discipline.
112	93M-0407-ACC-60L11-DWG-90112-A	-Drawing shall be updated according to the comments on the GA drawing. -Approval is subjected to the approval of coordination package between multi-discipline.
113	93M-0407-ACC-60L11-DWG-90113-A	-Drawing shall be updated according to the comments on the GA drawing. -Approval is subjected to the approval of coordination package between multi-discipline.
114	93M-0407-ACC-60L11-DWG-90114-A	-Drawing shall be updated according to the comments on the GA drawing. -Approval is subjected to the approval of coordination package between multi-discipline.
115	93M-0407-ACC-60L11-DWG-90115-A	-Drawing shall be updated according to the comments on the GA drawing. -Approval is subjected to the approval of coordination package between multi-discipline.

116	93M-0407-ACC-60L11-DWG-90116-A	-Drawing shall be updated according to the comments on the GA drawing. -Approval is subjected to the approval of coordination package between multi-discipline.
117	93M-0407-ACC-60L11-DWG-90117-A	-Drawing shall be updated according to the comments on the GA drawing. -Approval is subjected to the approval of coordination package between multi-discipline.
118	93M-0407-ACC-60L11-DWG-90118-A	-Drawing shall be updated according to the comments on the GA drawing. -Approval is subjected to the approval of coordination package between multi-discipline.
119	93M-0407-ACC-60L11-DWG-90119-A	-Drawing shall be updated according to the comments on the GA drawing. -Approval is subjected to the approval of coordination package between multi-discipline.
120	93M-0407-ACC-60L11-DWG-90120-A	-Drawing shall be updated according to the comments on the GA drawing. -Approval is subjected to the approval of coordination package between multi-discipline.
121	93M-0407-ACC-60L11-DWG-90121-A	-Drawing shall be updated according to the comments on the GA drawing. -Approval is subjected to the approval of coordination package between multi-discipline.
122	93M-0407-ACC-60L11-DWG-90122-A	-Drawing shall be updated according to the comments on the GA drawing. -Approval is subjected to the approval of coordination package between multi-discipline.
123	93M-0407-ACC-60L11-DWG-90123-A	-Drawing shall be updated according to the comments on the GA drawing. -Approval is subjected to the approval of coordination package between multi-discipline.
124	93M-0407-ACC-60L11-DWG-90124-A	-Drawing shall be updated according to the comments on the GA drawing. -Approval is subjected to the approval of coordination package between multi-discipline.
125	93M-0407-ACC-60L11-DWG-90125-A	-Drawing shall be updated according to the comments on the GA drawing. -Approval is subjected to the approval of coordination package between multi-discipline.
126	93M-0407-ACC-60L11-DWG-90126-A	-Drawing shall be updated according to the comments on the GA drawing. -Approval is subjected to the approval of coordination package between multi-discipline.
127	93M-0407-ACC-60L11-DWG-90127-A	-Drawing shall be updated according to the comments on the GA drawing. -Approval is subjected to the approval of

		coordination package between multi-discipline.
128	93M-0407-ACC-60L11-DWG-90128-A	-Drawing shall be updated according to the comments on the GA drawing. -Approval is subjected to the approval of coordination package between multi-discipline.
129	93M-0407-ACC-60L11-DWG-90129-A	-Drawing shall be updated according to the comments on the GA drawing. -Approval is subjected to the approval of coordination package between multi-discipline.
130	93M-0407-ACC-60L11-DWG-90130-A	-Drawing shall be updated according to the comments on the GA drawing. -Approval is subjected to the approval of coordination package between multi-discipline.
131	93M-0407-ACC-60L11-DWG-90131-A	-Drawing shall be updated according to the comments on the GA drawing. -Approval is subjected to the approval of coordination package between multi-discipline.
132	93M-0407-ACC-60L11-DWG-90132-A	-Drawing shall be updated according to the comments on the GA drawing. -Approval is subjected to the approval of coordination package between multi-discipline.
133	93M-0407-ACC-60L11-DWG-90133-A	-Drawing shall be updated according to the comments on the GA drawing. -Approval is subjected to the approval of coordination package between multi-discipline.
134	93M-0407-ACC-60L11-DWG-90134-A	-Drawing shall be updated according to the comments on the GA drawing. -Approval is subjected to the approval of coordination package between multi-discipline.
135	93M-0407-ACC-60L11-DWG-90135-A	-Drawing shall be updated according to the comments on the GA drawing. -Approval is subjected to the approval of coordination package between multi-discipline.
136	93M-0407-ACC-60L11-DWG-90136-A	-Drawing shall be updated according to the comments on the GA drawing. -Approval is subjected to the approval of coordination package between multi-discipline.
137	93M-0407-ACC-60L11-DWG-90137-A	-Drawing shall be updated according to the comments on the GA drawing. -Approval is subjected to the approval of coordination package between multi-discipline.
138	93M-0407-ACC-60L11-DWG-90138-A	-Drawing shall be updated according to the comments on the GA drawing. -Approval is subjected to the approval of coordination package between multi-discipline.

139	93M-0407-ACC-60L11-DWG-90139-A	-Drawing shall be updated according to the comments on the GA drawing. -Approval is subjected to the approval of coordination package between multi-discipline.
140	93M-0407-ACC-60L11-DWG-90140-A	-Drawing shall be updated according to the comments on the GA drawing. -Approval is subjected to the approval of coordination package between multi-discipline.
141	93M-0407-ACC-60L11-DWG-90141-A	-Drawing shall be updated according to the comments on the GA drawing. -Approval is subjected to the approval of coordination package between multi-discipline.
142	93M-0407-ACC-60L11-DWG-90142-A	-Drawing shall be updated according to the comments on the GA drawing. -Approval is subjected to the approval of coordination package between multi-discipline.
143	93M-0407-ACC-60L11-DWG-90143-A	-Drawing shall be updated according to the comments on the GA drawing. -Approval is subjected to the approval of coordination package between multi-discipline.
144	93M-0407-ACC-60L11-DWG-90144-A	-Drawing shall be updated according to the comments on the GA drawing. -Approval is subjected to the approval of coordination package between multi-discipline.
145	93M-0407-ACC-60L11-DWG-90145-A	-Drawing shall be updated according to the comments on the GA drawing. -Approval is subjected to the approval of coordination package between multi-discipline.
146	93M-0407-ACC-60L11-DWG-90146-A	-Drawing shall be updated according to the comments on the GA drawing. -Approval is subjected to the approval of coordination package between multi-discipline.
147	93M-0407-ACC-60L11-DWG-90147-A	-Drawing shall be updated according to the comments on the GA drawing. -Approval is subjected to the approval of coordination package between multi-discipline.
148	93M-0407-ACC-60L11-DWG-90148-A	-Drawing shall be updated according to the comments on the GA drawing. -Approval is subjected to the approval of coordination package between multi-discipline.
149	93M-0407-ACC-60L11-DWG-90149-A	-Drawing shall be updated according to the comments on the GA drawing. -Approval is subjected to the approval of coordination package between multi-discipline.
150	93M-0407-ACC-60L11-DWG-90150-A	-Drawing shall be updated according to the comments on the GA drawing. -Approval is subjected to the approval of

		coordination package between multi-discipline.
151	93M-0407-ACC-60L11-DWG-90151-A	-Drawing shall be updated according to the comments on the GA drawing. -Approval is subjected to the approval of coordination package between multi-discipline.
152	93M-0407-ACC-60L11-DWG-90152-A	-Drawing shall be updated according to the comments on the GA drawing. -Approval is subjected to the approval of coordination package between multi-discipline.
153	93M-0407-ACC-60L11-DWG-90153-A	-Drawing shall be updated according to the comments on the GA drawing. -Approval is subjected to the approval of coordination package between multi-discipline.
154	93M-0407-ACC-60L11-DWG-90154-A	-Drawing shall be updated according to the comments on the GA drawing. -Approval is subjected to the approval of coordination package between multi-discipline.
155	93M-0407-ACC-60L11-DWG-90155-A	-Drawing shall be updated according to the comments on the GA drawing. -Approval is subjected to the approval of coordination package between multi-discipline.
156	93M-0407-ACC-60L11-DWG-90156-A	-Drawing shall be updated according to the comments on the GA drawing. -Approval is subjected to the approval of coordination package between multi-discipline.
157	93M-0407-ACC-60L11-DWG-90157-A	-Drawing shall be updated according to the comments on the GA drawing. -Approval is subjected to the approval of coordination package between multi-discipline.
158	93M-0407-ACC-60L11-DWG-90158-A	-Drawing shall be updated according to the comments on the GA drawing. -Approval is subjected to the approval of coordination package between multi-discipline.
159	93M-0407-ACC-60L11-DWG-90159-A	-Drawing shall be updated according to the comments on the GA drawing. -Approval is subjected to the approval of coordination package between multi-discipline.
160	93M-0407-ACC-60L11-DWG-90160-A	-Drawing shall be updated according to the comments on the GA drawing. -Approval is subjected to the approval of coordination package between multi-discipline.
161	93M-0407-ACC-60L11-DWG-90161-A	-Drawing shall be updated according to the comments on the GA drawing. -Approval is subjected to the approval of coordination package between multi-discipline.

162	93M-0407-ACC-60L11-DWG-90162-A	-Drawing shall be updated according to the comments on the GA drawing. -Approval is subjected to the approval of coordination package between multi-discipline.
163	93M-0407-ACC-60L11-DWG-90163-A	-Drawing shall be updated according to the comments on the GA drawing. -Approval is subjected to the approval of coordination package between multi-discipline.
164	93M-0407-ACC-60L11-DWG-90164-A	-Drawing shall be updated according to the comments on the GA drawing. -Approval is subjected to the approval of coordination package between multi-discipline.
165	93M-0407-ACC-60L11-DWG-90165-A	-Drawing shall be updated according to the comments on the GA drawing. -Approval is subjected to the approval of coordination package between multi-discipline.
166	93M-0407-ACC-60L11-DWG-90166-A	-Drawing shall be updated according to the comments on the GA drawing. -Approval is subjected to the approval of coordination package between multi-discipline.
167	93M-0407-ACC-60L11-DWG-90167-A	-Drawing shall be updated according to the comments on the GA drawing. -Approval is subjected to the approval of coordination package between multi-discipline.
168	93M-0407-ACC-60L11-DWG-90168-A	-Drawing shall be updated according to the comments on the GA drawing. -Approval is subjected to the approval of coordination package between multi-discipline.
169	93M-0407-ACC-60L11-DWG-90169-A	-Drawing shall be updated according to the comments on the GA drawing. -Approval is subjected to the approval of coordination package between multi-discipline.
170	93M-0407-ACC-60L11-DWG-90170-A	-Drawing shall be updated according to the comments on the GA drawing. -Approval is subjected to the approval of coordination package between multi-discipline.
171	93M-0407-ACC-60L11-DWG-90171-A	-Drawing shall be updated according to the comments on the GA drawing. -Approval is subjected to the approval of coordination package between multi-discipline.
172	93M-0407-ACC-60L11-DWG-90172-A	-Drawing shall be updated according to the comments on the GA drawing. -Approval is subjected to the approval of coordination package between multi-discipline.
173	93M-0407-ACC-60L11-DWG-90173-A	-Drawing shall be updated according to the comments on the GA drawing. -Approval is subjected to the approval of

		coordination package between multi-discipline.
174	93M-0407-ACC-60L11-DWG-90174-A	-Drawing shall be updated according to the comments on the GA drawing. -Approval is subjected to the approval of coordination package between multi-discipline.
175	93M-0407-ACC-60L11-DWG-90175-A	-Drawing shall be updated according to the comments on the GA drawing. -Approval is subjected to the approval of coordination package between multi-discipline.
176	93M-0407-ACC-60L11-DWG-90176-A	-Drawing shall be updated according to the comments on the GA drawing. -Approval is subjected to the approval of coordination package between multi-discipline.
177	93M-0407-ACC-60L11-DWG-90177-A	-Drawing shall be updated according to the comments on the GA drawing. -Approval is subjected to the approval of coordination package between multi-discipline.
178	93M-0407-ACC-60L11-DWG-90178-A	-Drawing shall be updated according to the comments on the GA drawing. -Approval is subjected to the approval of coordination package between multi-discipline.
179	93M-0407-ACC-60L11-DWG-90179-A	-Drawing shall be updated according to the comments on the GA drawing. -Approval is subjected to the approval of coordination package between multi-discipline.
180	93M-0407-ACC-60L11-DWG-90180-A	- It is the contractor responsibility to ensure and revise all Dimensions and levels with the approved design drawings besides the coordination package before commencing any site Works.
181	93M-0407-ACC-60L11-DWG-90181-A	-Approval is subjected to the approval of coordination package between multi-discipline. -Clear this view. 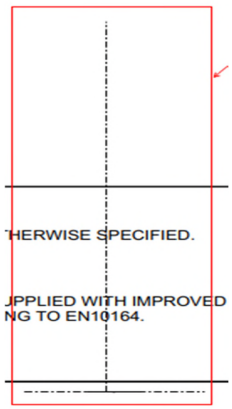

182	93M-0407-ACC-60L11-DWG-90182-A	-Approval is subjected to the approval of coordination package between multi-discipline. -Web thickness=10mm. 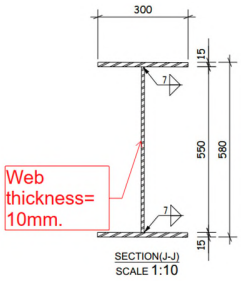
183	93M-0407-ACC-60L11-DWG-90183-A	-Should be PL45 as per the design reference and as shown in detail 4A View. 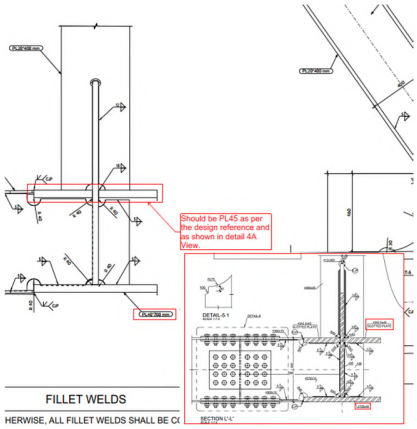
184	93M-0407-ACC-60L11-DWG-90184-A	-These plates appear to be PL30 in section M-M please clarify this conflict. 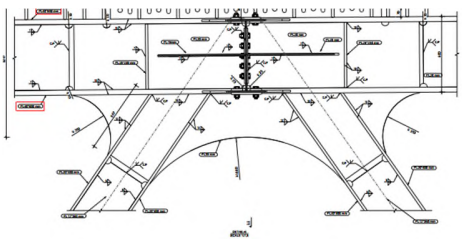 -Please clarify. 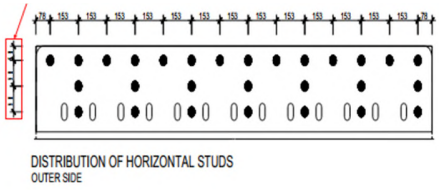

185	93M-0407-ACC-60L11-DWG-90185-A	-Bolts are missing from this section please clarify. 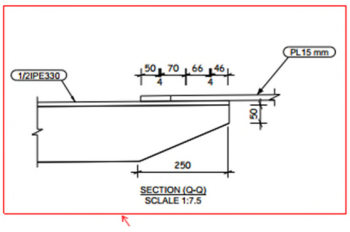
186	93M-0407-ACC-60L11-DWG-90186-A	-Please clarify adding this member as it is not found in the design reference. 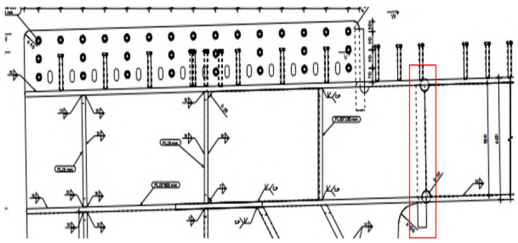
187	93M-0407-ACC-60L11-DWG-90187-A	-PL25*600 slotted plate. -Plate should be PL35. 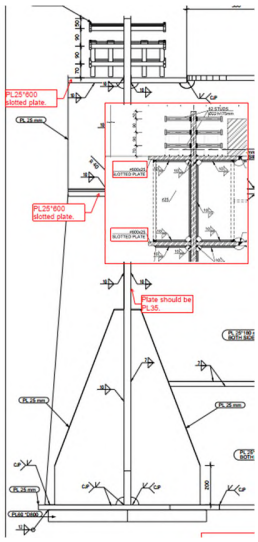 -PL25*185 Both sides. 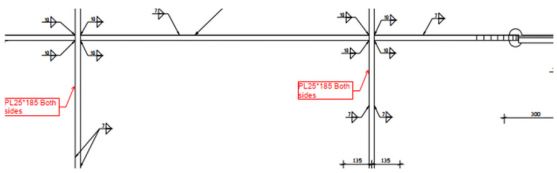

		-Kindly clarify these part marks.
188	93M-0407-ACC-60L11-DWG-90188-A	-PL25*282.5 slotted plate. -Plate should be PL35*400. -Plate should be PL15*330. 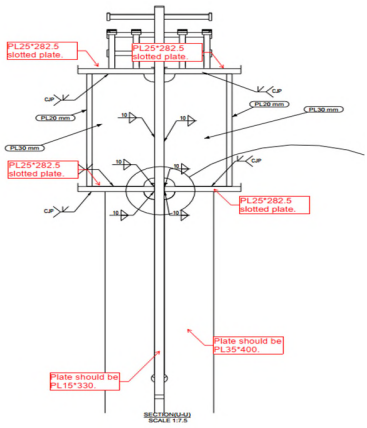 -Bolts should be M20. 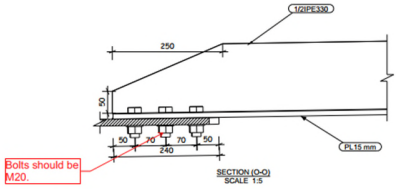 -This detail is not matching with the design reference. 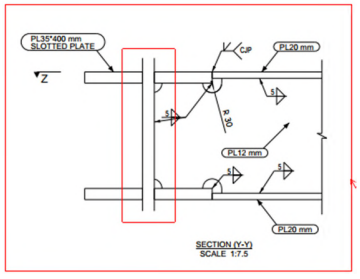
189	93M-0407-ACC-60L11-DWG-90189-A	-Approval is subjected to the approval of coordination package between multi-discipline.

190	93M-0407-ACC-60L11-DWG-90190-A	-Approval is subjected to the approval of coordination package between multi-discipline.
191	93M-0407-ACC-60L11-DWG-90191-A	-Approval is subjected to the approval of coordination package between multi-discipline. -Clear this view. 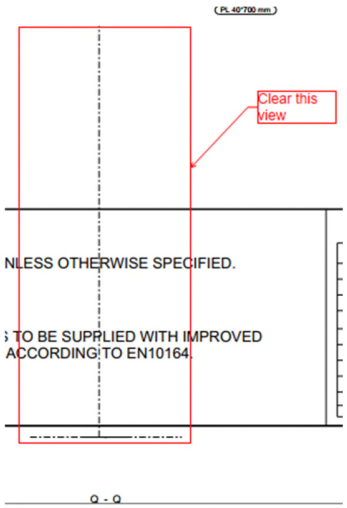
192	93M-0407-ACC-60L11-DWG-90192-A	-Drawing shall be updated according to the comments on the GA drawing. -Approval is subjected to the approval of coordination package between multi-discipline.
193	93M-0407-ACC-60L11-DWG-90193-A	-Drawing shall be updated according to the comments on the GA drawing. -Approval is subjected to the approval of coordination package between multi-discipline.
194	93M-0407-ACC-60L11-DWG-90194-A	-Drawing shall be updated according to the comments on the GA drawing. -Approval is subjected to the approval of coordination package between multi-discipline.
195	93M-0407-ACC-60L11-DWG-90195-A	-Drawing shall be updated according to the comments on the GA drawing. -Approval is subjected to the approval of coordination package between multi-discipline.
196	93M-0407-ACC-60L11-DWG-90196-A	-Drawing shall be updated according to the comments on the GA drawing. -Approval is subjected to the approval of coordination package between multi-discipline.
197	93M-0407-ACC-60L11-DWG-90197-A	-Drawing shall be updated according to the comments on the GA drawing. -Approval is subjected to the approval of coordination package between multi-discipline.
198	93M-0407-ACC-60L11-DWG-90198-A	-Drawing shall be updated according to the comments on the GA drawing.

		-Approval is subjected to the approval of coordination package between multi-discipline.
199	93M-0407-ACC-60L11-DWG-90199-A	-Drawing shall be updated according to the comments on the GA drawing. -Approval is subjected to the approval of coordination package between multi-discipline.
200	93M-0407-ACC-60L11-DWG-90200-A	-Drawing shall be updated according to the comments on the GA drawing. -Approval is subjected to the approval of coordination package between multi-discipline.
201	93M-0407-ACC-60L11-DWG-90201-A	-Drawing shall be updated according to the comments on the GA drawing. -Approval is subjected to the approval of coordination package between multi-discipline.
202	93M-0407-ACC-60L11-DWG-90202-A	-Drawing shall be updated according to the comments on the GA drawing. -Approval is subjected to the approval of coordination package between multi-discipline.
203	93M-0407-ACC-60L11-DWG-90203-A	-Drawing shall be updated according to the comments on the GA drawing. -Approval is subjected to the approval of coordination package between multi-discipline.
204	93M-0407-ACC-60L11-DWG-90204-A	-Drawing shall be updated according to the comments on the GA drawing. -Approval is subjected to the approval of coordination package between multi-discipline. - Please clarify. 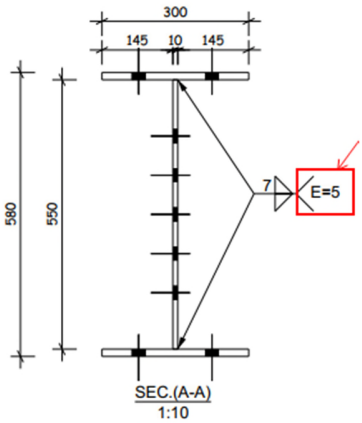
205	93M-0407-ACC-60L11-DWG-90205-A	Same comments as 93M-0407-ACC-60L11-DWG-90204-A.
206	93M-0407-ACC-60L11-DWG-90206-A	Same comments as 93M-0407-ACC-60L11-DWG-90204-A.
207	93M-0407-ACC-60L11-DWG-90207-A	Same comments as 93M-0407-ACC-60L11-DWG-90204-A.

208	93M-0407-ACC-60L11-DWG-90208-A	Same comments as 93M-0407-ACC-60L11-DWG-90204-A.
209	93M-0407-ACC-60L11-DWG-90209-A	Same comments as 93M-0407-ACC-60L11-DWG-90204-A.
210	93M-0407-ACC-60L11-DWG-90210-A	Same comments as 93M-0407-ACC-60L11-DWG-90204-A.
211	93M-0407-ACC-60L11-DWG-90211-A	Same comments as 93M-0407-ACC-60L11-DWG-90204-A.
212	93M-0407-ACC-60L11-DWG-90212-A	Same comments as 93M-0407-ACC-60L11-DWG-90204-A.
213	93M-0407-ACC-60L11-DWG-90213-A	-Drawing shall be updated according to the comments on the GA drawing. -Approval is subjected to the approval of coordination package between multi-discipline.
214	93M-0407-ACC-60L11-DWG-90214-A	-Drawing shall be updated according to the comments on the GA drawing. -Approval is subjected to the approval of coordination package between multi-discipline.
215	93M-0407-ACC-60L11-DWG-90215-A	-Drawing shall be updated according to the comments on the GA drawing. -Approval is subjected to the approval of coordination package between multi-discipline.
216	93M-0407-ACC-60L11-DWG-90216-A	-Drawing shall be updated according to the comments on the GA drawing. -Approval is subjected to the approval of coordination package between multi-discipline.
217	93M-0407-ACC-60L11-DWG-90217-A	-Drawing shall be updated according to the comments on the GA drawing. -Approval is subjected to the approval of coordination package between multi-discipline.
218	93M-0407-ACC-60L11-DWG-90218-A	-Drawing shall be updated according to the comments on the GA drawing. -Approval is subjected to the approval of coordination package between multi-discipline.
219	93M-0407-ACC-60L11-DWG-90219-A	-Drawing shall be updated according to the comments on the GA drawing. -Approval is subjected to the approval of coordination package between multi-discipline.
220	93M-0407-ACC-60L11-DWG-90220-A	-Drawing shall be updated according to the comments on the GA drawing. -Approval is subjected to the approval of coordination package between multi-discipline.
221	93M-0407-ACC-60L11-DWG-90221-A	-Drawing shall be updated according to the comments on the GA drawing. -Approval is subjected to the approval of coordination package between multi-discipline.

222	93M-0407-ACC-60L11-DWG-90222-A	-Drawing shall be updated according to the comments on the GA drawing. -Approval is subjected to the approval of coordination package between multi-discipline.
223	93M-0407-ACC-60L11-DWG-90223-A	-Drawing shall be updated according to the comments on the GA drawing. -Approval is subjected to the approval of coordination package between multi-discipline.
224	93M-0407-ACC-60L11-DWG-90224-A	-Drawing shall be updated according to the comments on the GA drawing. -Approval is subjected to the approval of coordination package between multi-discipline.
225	93M-0407-ACC-60L11-DWG-90225-A	-Drawing shall be updated according to the comments on the GA drawing. -Approval is subjected to the approval of coordination package between multi-discipline.
226	93M-0407-ACC-60L11-DWG-90226-A	-Drawing shall be updated according to the comments on the GA drawing. -Approval is subjected to the approval of coordination package between multi-discipline.
227	93M-0407-ACC-60L11-DWG-90227-A	-Drawing shall be updated according to the comments on the GA drawing. -Approval is subjected to the approval of coordination package between multi-discipline.
228	93M-0407-ACC-60L11-DWG-90228-A	-Drawing shall be updated according to the comments on the GA drawing. -Approval is subjected to the approval of coordination package between multi-discipline.
229	93M-0407-ACC-60L11-DWG-90229-A	-Drawing shall be updated according to the comments on the GA drawing. -Approval is subjected to the approval of coordination package between multi-discipline.
230	93M-0407-ACC-60L11-DWG-90230-A	-Drawing shall be updated according to the comments on the GA drawing. -Approval is subjected to the approval of coordination package between multi-discipline.
231	93M-0407-ACC-60L11-DWG-90231-A	-Drawing shall be updated according to the comments on the GA drawing. -Approval is subjected to the approval of coordination package between multi-discipline.
232	93M-0407-ACC-60L11-DWG-90232-A	-Drawing shall be updated according to the comments on the GA drawing. -Approval is subjected to the approval of coordination package between multi-discipline.
233	93M-0407-ACC-60L11-DWG-90233-A	-Drawing shall be updated according to the comments on the GA drawing. -Approval is subjected to the approval of

		coordination package between multi-discipline.
234	93M-0407-ACC-60L11-DWG-90234-A	-Drawing shall be updated according to the comments on the GA drawing. -Approval is subjected to the approval of coordination package between multi-discipline.
235	93M-0407-ACC-60L11-DWG-90235-A	-Drawing shall be updated according to the comments on the GA drawing. -Approval is subjected to the approval of coordination package between multi-discipline.
236	93M-0407-ACC-60L11-DWG-90236-A	-Drawing shall be updated according to the comments on the GA drawing. -Approval is subjected to the approval of coordination package between multi-discipline.
237	93M-0407-ACC-60L11-DWG-90237-A	-Drawing shall be updated according to the comments on the GA drawing. -Approval is subjected to the approval of coordination package between multi-discipline.
238	93M-0407-ACC-60L11-DWG-90238-A	-Drawing shall be updated according to the comments on the GA drawing. -Approval is subjected to the approval of coordination package between multi-discipline.
239	93M-0407-ACC-60L11-DWG-90239-A	-Drawing shall be updated according to the comments on the GA drawing. -Approval is subjected to the approval of coordination package between multi-discipline.
240	93M-0407-ACC-60L11-DWG-90240-A	-Drawing shall be updated according to the comments on the GA drawing. -Approval is subjected to the approval of coordination package between multi-discipline.
241	93M-0407-ACC-60L11-DWG-90241-A	-Drawing shall be updated according to the comments on the GA drawing. -Approval is subjected to the approval of coordination package between multi-discipline.
242	93M-0407-ACC-60L11-DWG-90242-A	-Drawing shall be updated according to the comments on the GA drawing. -Approval is subjected to the approval of coordination package between multi-discipline.
243	93M-0407-ACC-60L11-DWG-90243-A	-Drawing shall be updated according to the comments on the GA drawing. -Approval is subjected to the approval of coordination package between multi-discipline.
244	93M-0407-ACC-60L11-DWG-90244-A	-Drawing shall be updated according to the comments on the GA drawing. -Approval is subjected to the approval of coordination package between multi-discipline.

245	93M-0407-ACC-60L11-DWG-90245-A	-Drawing shall be updated according to the comments on the GA drawing. -Approval is subjected to the approval of coordination package between multi-discipline.
246	93M-0407-ACC-60L11-DWG-90246-A	-Drawing shall be updated according to the comments on the GA drawing. -Approval is subjected to the approval of coordination package between multi-discipline.
247	93M-0407-ACC-60L11-DWG-90247-A	-Drawing shall be updated according to the comments on the GA drawing. -Approval is subjected to the approval of coordination package between multi-discipline.
248	93M-0407-ACC-60L11-DWG-90248-A	-Drawing shall be updated according to the comments on the GA drawing. -Approval is subjected to the approval of coordination package between multi-discipline.
249	93M-0407-ACC-60L11-DWG-90249-A	-Drawing shall be updated according to the comments on the GA drawing. -Approval is subjected to the approval of coordination package between multi-discipline.
250	93M-0407-ACC-60L11-DWG-90250-A	-Drawing shall be updated according to the comments on the GA drawing. -Approval is subjected to the approval of coordination package between multi-discipline.
251	93M-0407-ACC-60L11-DWG-90251-A	-Drawing shall be updated according to the comments on the GA drawing. -Approval is subjected to the approval of coordination package between multi-discipline.
252	93M-0407-ACC-60L11-DWG-90252-A	-Drawing shall be updated according to the comments on the GA drawing. -Approval is subjected to the approval of coordination package between multi-discipline.
253	93M-0407-ACC-60L11-DWG-90253-A	-Drawing shall be updated according to the comments on the GA drawing. -Approval is subjected to the approval of coordination package between multi-discipline.
254	93M-0407-ACC-60L11-DWG-90254-A	-Drawing shall be updated according to the comments on the GA drawing. -Approval is subjected to the approval of coordination package between multi-discipline.
255	93M-0407-ACC-60L11-DWG-90255-A	-Drawing shall be updated according to the comments on the GA drawing. -Approval is subjected to the approval of coordination package between multi-discipline.
256	93M-0407-ACC-60L11-DWG-90256-A	-Drawing shall be updated according to the comments on the GA drawing. -Approval is subjected to the approval of

		coordination package between multi-discipline.
257	93M-0407-ACC-60L11-DWG-90257-A	-Drawing shall be updated according to the comments on the GA drawing. -Approval is subjected to the approval of coordination package between multi-discipline.
258	93M-0407-ACC-60L11-DWG-90258-A	-Drawing shall be updated according to the comments on the GA drawing. -Approval is subjected to the approval of coordination package between multi-discipline.
259	93M-0407-ACC-60L11-DWG-90259-A	-Drawing shall be updated according to the comments on the GA drawing. -Approval is subjected to the approval of coordination package between multi-discipline.
260	93M-0407-ACC-60L11-DWG-90260-A	-Drawing shall be updated according to the comments on the GA drawing. -Approval is subjected to the approval of coordination package between multi-discipline.
261	93M-0407-ACC-60L11-DWG-90261-A	-Drawing shall be updated according to the comments on the GA drawing. -Approval is subjected to the approval of coordination package between multi-discipline.
262	93M-0407-ACC-60L11-DWG-90262-A	-Drawing shall be updated according to the comments on the GA drawing. -Approval is subjected to the approval of coordination package between multi-discipline.
263	93M-0407-ACC-60L11-DWG-90263-A	-Drawing shall be updated according to the comments on the GA drawing. -Approval is subjected to the approval of coordination package between multi-discipline.
264	93M-0407-ACC-60L11-DWG-90264-A	-Drawing shall be updated according to the comments on the GA drawing. -Approval is subjected to the approval of coordination package between multi-discipline.
265	93M-0407-ACC-60L11-DWG-90265-A	-Drawing shall be updated according to the comments on the GA drawing. -Approval is subjected to the approval of coordination package between multi-discipline.
266	93M-0407-ACC-60L11-DWG-90266-A	-Drawing shall be updated according to the comments on the GA drawing. -Approval is subjected to the approval of coordination package between multi-discipline.
267	93M-0407-ACC-60L11-DWG-90267-A	-Drawing shall be updated according to the comments on the GA drawing. -Approval is subjected to the approval of coordination package between multi-discipline.

268	93M-0407-ACC-60L11-DWG-90268-A	-Drawing shall be updated according to the comments on the GA drawing. -Approval is subjected to the approval of coordination package between multi-discipline.
269	93M-0407-ACC-60L11-DWG-90269-A	-Drawing shall be updated according to the comments on the GA drawing. -Approval is subjected to the approval of coordination package between multi-discipline.
270	93M-0407-ACC-60L11-DWG-90270-A	-Drawing shall be updated according to the comments on the GA drawing. -Approval is subjected to the approval of coordination package between multi-discipline.
271	93M-0407-ACC-60L11-DWG-90271-A	-Drawing shall be updated according to the comments on the GA drawing. -Approval is subjected to the approval of coordination package between multi-discipline.
272	93M-0407-ACC-60L11-DWG-90272-A	-Drawing shall be updated according to the comments on the GA drawing. -Approval is subjected to the approval of coordination package between multi-discipline.
273	93M-0407-ACC-60L11-DWG-90273-A	-Drawing shall be updated according to the comments on the GA drawing. -Approval is subjected to the approval of coordination package between multi-discipline.
274	93M-0407-ACC-60L11-DWG-90274-A	-Drawing shall be updated according to the comments on the GA drawing. -Approval is subjected to the approval of coordination package between multi-discipline.
275	93M-0407-ACC-60L11-DWG-90275-A	-Drawing shall be updated according to the comments on the GA drawing. -Approval is subjected to the approval of coordination package between multi-discipline.
276	93M-0407-ACC-60L11-DWG-90276-A	-Drawing shall be updated according to the comments on the GA drawing. -Approval is subjected to the approval of coordination package between multi-discipline.
277	93M-0407-ACC-60L11-DWG-90277-A	-Drawing shall be updated according to the comments on the GA drawing. -Approval is subjected to the approval of coordination package between multi-discipline.
278	93M-0407-ACC-60L11-DWG-90278-A	-Drawing shall be updated according to the comments on the GA drawing. -Approval is subjected to the approval of coordination package between multi-discipline.
279	93M-0407-ACC-60L11-DWG-90279-A	-Drawing shall be updated according to the comments on the GA drawing. -Approval is subjected to the approval of

		coordination package between multi-discipline.
280	93M-0407-ACC-60L11-DWG-90280-A	-Drawing shall be updated according to the comments on the GA drawing. -Approval is subjected to the approval of coordination package between multi-discipline.
281	93M-0407-ACC-60L11-DWG-90281-A	-Drawing shall be updated according to the comments on the GA drawing. -Approval is subjected to the approval of coordination package between multi-discipline.
282	93M-0407-ACC-60L11-DWG-90282-A	-Drawing shall be updated according to the comments on the GA drawing. -Approval is subjected to the approval of coordination package between multi-discipline.
283	93M-0407-ACC-60L11-DWG-90283-A	-Drawing shall be updated according to the comments on the GA drawing. -Approval is subjected to the approval of coordination package between multi-discipline.
284	93M-0407-ACC-60L11-DWG-90284-A	-Drawing shall be updated according to the comments on the GA drawing. -Approval is subjected to the approval of coordination package between multi-discipline.
285	93M-0407-ACC-60L11-DWG-90285-A	-Drawing shall be updated according to the comments on the GA drawing. -Approval is subjected to the approval of coordination package between multi-discipline.
286	93M-0407-ACC-60L11-DWG-90286-A	-Drawing shall be updated according to the comments on the GA drawing. -Approval is subjected to the approval of coordination package between multi-discipline.
287	93M-0407-ACC-60L11-DWG-90287-A	-Drawing shall be updated according to the comments on the GA drawing. -Approval is subjected to the approval of coordination package between multi-discipline.
288	93M-0407-ACC-60L11-DWG-90288-A	-Drawing shall be updated according to the comments on the GA drawing. -Approval is subjected to the approval of coordination package between multi-discipline.
289	93M-0407-ACC-60L11-DWG-90289-A	-Drawing shall be updated according to the comments on the GA drawing. -Approval is subjected to the approval of coordination package between multi-discipline.
290	93M-0407-ACC-60L11-DWG-90290-A	-Drawing shall be updated according to the comments on the GA drawing. -Approval is subjected to the approval of coordination package between multi-discipline.

291	93M-0407-ACC-60L11-DWG-90291-A	-Drawing shall be updated according to the comments on the GA drawing. -Approval is subjected to the approval of coordination package between multi-discipline.
292	93M-0407-ACC-60L11-DWG-90292-A	-Drawing shall be updated according to the comments on the GA drawing. -Approval is subjected to the approval of coordination package between multi-discipline.
293	93M-0407-ACC-60L11-DWG-90293-A	-Drawing shall be updated according to the comments on the GA drawing. -Approval is subjected to the approval of coordination package between multi-discipline.
294	93M-0407-ACC-60L11-DWG-90294-A	-Drawing shall be updated according to the comments on the GA drawing. -Approval is subjected to the approval of coordination package between multi-discipline.
295	93M-0407-ACC-60L11-DWG-90295-A	-Drawing shall be updated according to the comments on the GA drawing. -Approval is subjected to the approval of coordination package between multi-discipline.
296	93M-0407-ACC-60L11-DWG-90296-A	-Drawing shall be updated according to the comments on the GA drawing. -Approval is subjected to the approval of coordination package between multi-discipline.
297	93M-0407-ACC-60L11-DWG-90297-A	-Drawing shall be updated according to the comments on the GA drawing. -Approval is subjected to the approval of coordination package between multi-discipline.
298	93M-0407-ACC-60L11-DWG-90298-A	-Drawing shall be updated according to the comments on the GA drawing. -Approval is subjected to the approval of coordination package between multi-discipline.
299	93M-0407-ACC-60L11-DWG-90299-A	-Drawing shall be updated according to the comments on the GA drawing. -Approval is subjected to the approval of coordination package between multi-discipline.
300	93M-0407-ACC-60L11-DWG-90300-A	-Drawing shall be updated according to the comments on the GA drawing. -Approval is subjected to the approval of coordination package between multi-discipline.
301	93M-0407-ACC-60L11-DWG-90301-A	-Drawing shall be updated according to the comments on the GA drawing. -Approval is subjected to the approval of coordination package between multi-discipline.
302	93M-0407-ACC-60L11-DWG-90302-A	-Drawing shall be updated according to the comments on the GA drawing. -Approval is subjected to the approval of

		coordination package between multi-discipline.
303	93M-0407-ACC-60L11-DWG-90303-A	-Drawing shall be updated according to the comments on the GA drawing. -Approval is subjected to the approval of coordination package between multi-discipline.
304	93M-0407-ACC-60L11-DWG-90304-A	-Drawing shall be updated according to the comments on the GA drawing. -Approval is subjected to the approval of coordination package between multi-discipline.
305	93M-0407-ACC-60L11-DWG-90305-A	-Drawing shall be updated according to the comments on the GA drawing. -Approval is subjected to the approval of coordination package between multi-discipline.
306	93M-0407-ACC-60L11-DWG-90306-A	-Drawing shall be updated according to the comments on the GA drawing. -Approval is subjected to the approval of coordination package between multi-discipline.
307	93M-0407-ACC-60L11-DWG-90307-A	-Drawing shall be updated according to the comments on the GA drawing. -Approval is subjected to the approval of coordination package between multi-discipline.
308	93M-0407-ACC-60L11-DWG-90308-A	-Drawing shall be updated according to the comments on the GA drawing. -Approval is subjected to the approval of coordination package between multi-discipline.
309	93M-0407-ACC-60L11-DWG-90309-A	-Drawing shall be updated according to the comments on the GA drawing. -Approval is subjected to the approval of coordination package between multi-discipline.
310	93M-0407-ACC-60L11-DWG-90310-A	-Drawing shall be updated according to the comments on the GA drawing. -Approval is subjected to the approval of coordination package between multi-discipline.
311	93M-0407-ACC-60L11-DWG-90311-A	-Drawing shall be updated according to the comments on the GA drawing. -Approval is subjected to the approval of coordination package between multi-discipline.
312	93M-0407-ACC-60L11-DWG-90312-A	-Drawing shall be updated according to the comments on the GA drawing. -Approval is subjected to the approval of coordination package between multi-discipline.
313	93M-0407-ACC-60L11-DWG-90313-A	-Drawing shall be updated according to the comments on the GA drawing. -Approval is subjected to the approval of coordination package between multi-discipline.

314	93M-0407-ACC-60L11-DWG-90314-A	-Drawing shall be updated according to the comments on the GA drawing. -Approval is subjected to the approval of coordination package between multi-discipline.
315	93M-0407-ACC-60L11-DWG-90315-A	-Drawing shall be updated according to the comments on the GA drawing. -Approval is subjected to the approval of coordination package between multi-discipline.
316	93M-0407-ACC-60L11-DWG-90316-A	-Drawing shall be updated according to the comments on the GA drawing. -Approval is subjected to the approval of coordination package between multi-discipline.
317	93M-0407-ACC-60L11-DWG-90317-A	-Drawing shall be updated according to the comments on the GA drawing. -Approval is subjected to the approval of coordination package between multi-discipline.
318	93M-0407-ACC-60L11-DWG-90318-A	-Drawing shall be updated according to the comments on the GA drawing. -Approval is subjected to the approval of coordination package between multi-discipline.
319	93M-0407-ACC-60L11-DWG-90319-A	-Drawing shall be updated according to the comments on the GA drawing. -Approval is subjected to the approval of coordination package between multi-discipline.
320	93M-0407-ACC-60L11-DWG-90320-A	-Drawing shall be updated according to the comments on the GA drawing. -Approval is subjected to the approval of coordination package between multi-discipline.
321	93M-0407-ACC-60L11-DWG-90321-A	-Drawing shall be updated according to the comments on the GA drawing. -Approval is subjected to the approval of coordination package between multi-discipline.
322	93M-0407-ACC-60L11-DWG-90322-A	-Drawing shall be updated according to the comments on the GA drawing. -Approval is subjected to the approval of coordination package between multi-discipline.
323	93M-0407-ACC-60L11-DWG-90323-A	-Drawing shall be updated according to the comments on the GA drawing. -Approval is subjected to the approval of coordination package between multi-discipline.
324	93M-0407-ACC-60L11-DWG-90324-A	-Drawing shall be updated according to the comments on the GA drawing. -Approval is subjected to the approval of coordination package between multi-discipline.
325	93M-0407-ACC-60L11-DWG-90325-A	-Drawing shall be updated according to the comments on the GA drawing. -Approval is subjected to the approval of

		coordination package between multi-discipline.
326	93M-0407-ACC-60L11-DWG-90326-A	-Drawing shall be updated according to the comments on the GA drawing. -Approval is subjected to the approval of coordination package between multi-discipline.
327	93M-0407-ACC-60L11-DWG-90327-A	-Drawing shall be updated according to the comments on the GA drawing. -Approval is subjected to the approval of coordination package between multi-discipline.
328	93M-0407-ACC-60L11-DWG-90328-A	-Drawing shall be updated according to the comments on the GA drawing. -Approval is subjected to the approval of coordination package between multi-discipline.
329	93M-0407-ACC-60L11-DWG-90329-A	-Drawing shall be updated according to the comments on the GA drawing. -Approval is subjected to the approval of coordination package between multi-discipline.
330	93M-0407-ACC-60L11-DWG-90330-A	-Drawing shall be updated according to the comments on the GA drawing. -Approval is subjected to the approval of coordination package between multi-discipline.
331	93M-0407-ACC-60L11-DWG-90331-A	-Drawing shall be updated according to the comments on the GA drawing. -Approval is subjected to the approval of coordination package between multi-discipline.
332	93M-0407-ACC-60L11-DWG-90332-A	-Drawing shall be updated according to the comments on the GA drawing. -Approval is subjected to the approval of coordination package between multi-discipline.
333	93M-0407-ACC-60L11-DWG-90333-A	-Drawing shall be updated according to the comments on the GA drawing. -Approval is subjected to the approval of coordination package between multi-discipline.
334	93M-0407-ACC-60L11-DWG-90334-A	-Drawing shall be updated according to the comments on the GA drawing. -Approval is subjected to the approval of coordination package between multi-discipline.
335	93M-0407-ACC-60L11-DWG-90335-A	-Drawing shall be updated according to the comments on the GA drawing. -Approval is subjected to the approval of coordination package between multi-discipline.
336	93M-0407-ACC-60L11-DWG-90336-A	-Drawing shall be updated according to the comments on the GA drawing. -Approval is subjected to the approval of coordination package between multi-discipline.

337	93M-0407-ACC-60L11-DWG-90337-A	-Drawing shall be updated according to the comments on the GA drawing. -Approval is subjected to the approval of coordination package between multi-discipline.
338	93M-0407-ACC-60L11-DWG-90338-A	-Drawing shall be updated according to the comments on the GA drawing. -Approval is subjected to the approval of coordination package between multi-discipline.
339	93M-0407-ACC-60L11-DWG-90339-A	-Drawing shall be updated according to the comments on the GA drawing. -Approval is subjected to the approval of coordination package between multi-discipline.
340	93M-0407-ACC-60L11-DWG-90340-A	-Drawing shall be updated according to the comments on the GA drawing. -Approval is subjected to the approval of coordination package between multi-discipline.
341	93M-0407-ACC-60L11-DWG-90341-A	-Drawing shall be updated according to the comments on the GA drawing. -Approval is subjected to the approval of coordination package between multi-discipline.
342	93M-0407-ACC-60L11-DWG-90342-A	-Drawing shall be updated according to the comments on the GA drawing. -Approval is subjected to the approval of coordination package between multi-discipline.
343	93M-0407-ACC-60L11-DWG-90343-A	-Drawing shall be updated according to the comments on the GA drawing. -Approval is subjected to the approval of coordination package between multi-discipline.
344	93M-0407-ACC-60L11-DWG-90344-A	-Drawing shall be updated according to the comments on the GA drawing. -Approval is subjected to the approval of coordination package between multi-discipline.
345	93M-0407-ACC-60L11-DWG-90345-A	-Drawing shall be updated according to the comments on the GA drawing. -Approval is subjected to the approval of coordination package between multi-discipline.
346	93M-0407-ACC-60L11-DWG-90346-A	-Drawing shall be updated according to the comments on the GA drawing. -Approval is subjected to the approval of coordination package between multi-discipline.
347	93M-0407-ACC-60L11-DWG-90347-A	-Drawing shall be updated according to the comments on the GA drawing. -Approval is subjected to the approval of coordination package between multi-discipline.
348	93M-0407-ACC-60L11-DWG-90348-A	-Drawing shall be updated according to the comments on the GA drawing. -Approval is subjected to the approval of

		coordination package between multi-discipline.
349	93M-0407-ACC-60L11-DWG-90349-A	-Drawing shall be updated according to the comments on the GA drawing. -Approval is subjected to the approval of coordination package between multi-discipline.
350	93M-0407-ACC-60L11-DWG-90350-A	-Drawing shall be updated according to the comments on the GA drawing. -Approval is subjected to the approval of coordination package between multi-discipline.
351	93M-0407-ACC-60L11-DWG-90351-A	-Drawing shall be updated according to the comments on the GA drawing. -Approval is subjected to the approval of coordination package between multi-discipline.
352	93M-0407-ACC-60L11-DWG-90352-A	-Drawing shall be updated according to the comments on the GA drawing. -Approval is subjected to the approval of coordination package between multi-discipline.
353	93M-0407-ACC-60L11-DWG-90353-A	-Drawing shall be updated according to the comments on the GA drawing. -Approval is subjected to the approval of coordination package between multi-discipline.
354	93M-0407-ACC-60L11-DWG-90354-A	-Drawing shall be updated according to the comments on the GA drawing. -Approval is subjected to the approval of coordination package between multi-discipline.
355	93M-0407-ACC-60L11-DWG-90355-A	-Drawing shall be updated according to the comments on the GA drawing. -Approval is subjected to the approval of coordination package between multi-discipline.
356	93M-0407-ACC-60L11-DWG-90356-A	-Drawing shall be updated according to the comments on the GA drawing. -Approval is subjected to the approval of coordination package between multi-discipline.
357	93M-0407-ACC-60L11-DWG-90357-A	-Drawing shall be updated according to the comments on the GA drawing. -Approval is subjected to the approval of coordination package between multi-discipline.
358	93M-0407-ACC-60L11-DWG-90358-A	-Drawing shall be updated according to the comments on the GA drawing. -Approval is subjected to the approval of coordination package between multi-discipline.
359	93M-0407-ACC-60L11-DWG-90359-A	-Drawing shall be updated according to the comments on the GA drawing. -Approval is subjected to the approval of coordination package between multi-discipline.

360	93M-0407-ACC-60L11-DWG-90360-A	-Drawing shall be updated according to the comments on the GA drawing. -Approval is subjected to the approval of coordination package between multi-discipline.
361	93M-0407-ACC-60L11-DWG-90361-A	-Drawing shall be updated according to the comments on the GA drawing. -Approval is subjected to the approval of coordination package between multi-discipline.
362	93M-0407-ACC-60L11-DWG-90362-A	-Drawing shall be updated according to the comments on the GA drawing. -Approval is subjected to the approval of coordination package between multi-discipline.
363	93M-0407-ACC-60L11-DWG-90363-A	-Drawing shall be updated according to the comments on the GA drawing. -Approval is subjected to the approval of coordination package between multi-discipline.
364	93M-0407-ACC-60L11-DWG-90364-A	-Drawing shall be updated according to the comments on the GA drawing. -Approval is subjected to the approval of coordination package between multi-discipline.
365	93M-0407-ACC-60L11-DWG-90365-A	-Drawing shall be updated according to the comments on the GA drawing. -Approval is subjected to the approval of coordination package between multi-discipline.
366	93M-0407-ACC-60L11-DWG-90366-A	-Drawing shall be updated according to the comments on the GA drawing. -Approval is subjected to the approval of coordination package between multi-discipline.
367	93M-0407-ACC-60L11-DWG-90367-A	-Drawing shall be updated according to the comments on the GA drawing. -Approval is subjected to the approval of coordination package between multi-discipline.
368	93M-0407-ACC-60L11-DWG-90368-A	-Drawing shall be updated according to the comments on the GA drawing. -Approval is subjected to the approval of coordination package between multi-discipline.
369	93M-0407-ACC-60L11-DWG-90369-A	-Drawing shall be updated according to the comments on the GA drawing. -Approval is subjected to the approval of coordination package between multi-discipline.
370	93M-0407-ACC-60L11-DWG-90370-A	-Drawing shall be updated according to the comments on the GA drawing. -Approval is subjected to the approval of coordination package between multi-discipline.
371	93M-0407-ACC-60L11-DWG-90371-A	-Drawing shall be updated according to the comments on the GA drawing. -Approval is subjected to the approval of

		coordination package between multi-discipline.
372	93M-0407-ACC-60L11-DWG-90372-A	-Drawing shall be updated according to the comments on the GA drawing. -Approval is subjected to the approval of coordination package between multi-discipline.
373	93M-0407-ACC-60L11-DWG-90373-A	-Drawing shall be updated according to the comments on the GA drawing. -Approval is subjected to the approval of coordination package between multi-discipline.
374	93M-0407-ACC-60L11-DWG-90374-A	-Drawing shall be updated according to the comments on the GA drawing. -Approval is subjected to the approval of coordination package between multi-discipline.
375	93M-0407-ACC-60L11-DWG-90375-A	-Drawing shall be updated according to the comments on the GA drawing. -Approval is subjected to the approval of coordination package between multi-discipline.
376	93M-0407-ACC-60L11-DWG-90376-A	-Drawing shall be updated according to the comments on the GA drawing. -Approval is subjected to the approval of coordination package between multi-discipline.
377	93M-0407-ACC-60L11-DWG-90377-A	-Drawing shall be updated according to the comments on the GA drawing. -Approval is subjected to the approval of coordination package between multi-discipline.
378	93M-0407-ACC-60L11-DWG-90378-A	-Drawing shall be updated according to the comments on the GA drawing. -Approval is subjected to the approval of coordination package between multi-discipline.
379	93M-0407-ACC-60L11-DWG-90379-A	-Drawing shall be updated according to the comments on the GA drawing. -Approval is subjected to the approval of coordination package between multi-discipline.
380	93M-0407-ACC-60L11-DWG-90380-A	-Drawing shall be updated according to the comments on the GA drawing. -Approval is subjected to the approval of coordination package between multi-discipline.
381	93M-0407-ACC-60L11-DWG-90381-A	-Drawing shall be updated according to the comments on the GA drawing. -Approval is subjected to the approval of coordination package between multi-discipline.
382	93M-0407-ACC-60L11-DWG-90382-A	-Drawing shall be updated according to the comments on the GA drawing. -Approval is subjected to the approval of coordination package between multi-discipline.

383	93M-0407-ACC-60L11-DWG-90383-A	-Drawing shall be updated according to the comments on the GA drawing. -Approval is subjected to the approval of coordination package between multi-discipline.
384	93M-0407-ACC-60L11-DWG-90384-A	-Drawing shall be updated according to the comments on the GA drawing. -Approval is subjected to the approval of coordination package between multi-discipline.
385	93M-0407-ACC-60L11-DWG-90385-A	-Drawing shall be updated according to the comments on the GA drawing. -Approval is subjected to the approval of coordination package between multi-discipline.
386	93M-0407-ACC-60L11-DWG-90386-A	-Drawing shall be updated according to the comments on the GA drawing. -Approval is subjected to the approval of coordination package between multi-discipline.
387	93M-0407-ACC-60L11-DWG-90387-A	-Drawing shall be updated according to the comments on the GA drawing. -Approval is subjected to the approval of coordination package between multi-discipline.
388	93M-0407-ACC-60L11-DWG-90388-A	-Drawing shall be updated according to the comments on the GA drawing. -Approval is subjected to the approval of coordination package between multi-discipline.
389	93M-0407-ACC-60L11-DWG-90389-A	-Drawing shall be updated according to the comments on the GA drawing. -Approval is subjected to the approval of coordination package between multi-discipline.
390	93M-0407-ACC-60L11-DWG-90390-A	-Drawing shall be updated according to the comments on the GA drawing. -Approval is subjected to the approval of coordination package between multi-discipline.
391	93M-0407-ACC-60L11-DWG-90391-A	-Drawing shall be updated according to the comments on the GA drawing. -Approval is subjected to the approval of coordination package between multi-discipline.
392	93M-0407-ACC-60L11-DWG-90392-A	-Drawing shall be updated according to the comments on the GA drawing. -Approval is subjected to the approval of coordination package between multi-discipline.
393	93M-0407-ACC-60L11-DWG-90393-A	-Drawing shall be updated according to the comments on the GA drawing. -Approval is subjected to the approval of coordination package between multi-discipline.
394	93M-0407-ACC-60L11-DWG-90394-A	-Drawing shall be updated according to the comments on the GA drawing. -Approval is subjected to the approval of

		coordination package between multi-discipline.
395	93M-0407-ACC-60L11-DWG-90395-A	-Drawing shall be updated according to the comments on the GA drawing. -Approval is subjected to the approval of coordination package between multi-discipline.
396	93M-0407-ACC-60L11-DWG-90396-A	-Drawing shall be updated according to the comments on the GA drawing. -Approval is subjected to the approval of coordination package between multi-discipline.
397	93M-0407-ACC-60L11-DWG-90397-A	-Drawing shall be updated according to the comments on the GA drawing. -Approval is subjected to the approval of coordination package between multi-discipline.
398	93M-0407-ACC-60L11-DWG-90398-A	-Drawing shall be updated according to the comments on the GA drawing. -Approval is subjected to the approval of coordination package between multi-discipline.
399	93M-0407-ACC-60L11-DWG-90399-A	-Drawing shall be updated according to the comments on the GA drawing. -Approval is subjected to the approval of coordination package between multi-discipline.
400	93M-0407-ACC-60L11-DWG-90400-A	-Drawing shall be updated according to the comments on the GA drawing. -Approval is subjected to the approval of coordination package between multi-discipline.
401	93M-0407-ACC-60L11-DWG-90401-A	-Drawing shall be updated according to the comments on the GA drawing. -Approval is subjected to the approval of coordination package between multi-discipline.
402	93M-0407-ACC-60L11-DWG-90402-A	-Drawing shall be updated according to the comments on the GA drawing. -Approval is subjected to the approval of coordination package between multi-discipline.
403	93M-0407-ACC-60L11-DWG-90403-A	-Drawing shall be updated according to the comments on the GA drawing. -Approval is subjected to the approval of coordination package between multi-discipline.
404	93M-0407-ACC-60L11-DWG-90404-A	-Drawing shall be updated according to the comments on the GA drawing. -Approval is subjected to the approval of coordination package between multi-discipline.
405	93M-0407-ACC-60L11-DWG-90405-A	-Drawing shall be updated according to the comments on the GA drawing. -Approval is subjected to the approval of coordination package between multi-discipline.

406	93M-0407-ACC-60L11-DWG-90406-A	-Drawing shall be updated according to the comments on the GA drawing. -Approval is subjected to the approval of coordination package between multi-discipline.
407	93M-0407-ACC-60L11-DWG-90407-A	-Drawing shall be updated according to the comments on the GA drawing. -Approval is subjected to the approval of coordination package between multi-discipline.
408	93M-0407-ACC-60L11-DWG-90408-A	-Drawing shall be updated according to the comments on the GA drawing. -Approval is subjected to the approval of coordination package between multi-discipline.
409	93M-0407-ACC-60L11-DWG-90409-A	-Drawing shall be updated according to the comments on the GA drawing. -Approval is subjected to the approval of coordination package between multi-discipline.
410	93M-0407-ACC-60L11-DWG-90410-A	-Drawing shall be updated according to the comments on the GA drawing. -Approval is subjected to the approval of coordination package between multi-discipline.
411	93M-0407-ACC-60L11-DWG-90411-A	-Drawing shall be updated according to the comments on the GA drawing. -Approval is subjected to the approval of coordination package between multi-discipline.
412	93M-0407-ACC-60L11-DWG-90412-A	-Drawing shall be updated according to the comments on the GA drawing. -Approval is subjected to the approval of coordination package between multi-discipline.
413	93M-0407-ACC-60L11-DWG-90413-A	-Drawing shall be updated according to the comments on the GA drawing. -Approval is subjected to the approval of coordination package between multi-discipline.
414	93M-0407-ACC-60L11-DWG-90414-A	-Drawing shall be updated according to the comments on the GA drawing. -Approval is subjected to the approval of coordination package between multi-discipline.
415	93M-0407-ACC-60L11-DWG-90415-A	-Drawing shall be updated according to the comments on the GA drawing. -Approval is subjected to the approval of coordination package between multi-discipline.
416	93M-0407-ACC-60L11-DWG-90416-A	-Drawing shall be updated according to the comments on the GA drawing. -Approval is subjected to the approval of coordination package between multi-discipline.
417	93M-0407-ACC-60L11-DWG-90417-A	-Drawing shall be updated according to the comments on the GA drawing. -Approval is subjected to the approval of

		coordination package between multi-discipline.
418	93M-0407-ACC-60L11-DWG-90418-A	-Drawing shall be updated according to the comments on the GA drawing. -Approval is subjected to the approval of coordination package between multi-discipline.
419	93M-0407-ACC-60L11-DWG-90419-A	-Drawing shall be updated according to the comments on the GA drawing. -Approval is subjected to the approval of coordination package between multi-discipline.
420	93M-0407-ACC-60L11-DWG-90420-A	-Drawing shall be updated according to the comments on the GA drawing. -Approval is subjected to the approval of coordination package between multi-discipline.
421	93M-0407-ACC-60L11-DWG-90421-A	-Drawing shall be updated according to the comments on the GA drawing. -Approval is subjected to the approval of coordination package between multi-discipline.
422	93M-0407-ACC-60L11-DWG-90422-A	-Drawing shall be updated according to the comments on the GA drawing. -Approval is subjected to the approval of coordination package between multi-discipline.
423	93M-0407-ACC-60L11-DWG-90423-A	-Drawing shall be updated according to the comments on the GA drawing. -Approval is subjected to the approval of coordination package between multi-discipline.
424	93M-0407-ACC-60L11-DWG-90424-A	-Drawing shall be updated according to the comments on the GA drawing. -Approval is subjected to the approval of coordination package between multi-discipline.
425	93M-0407-ACC-60L11-DWG-90425-A	-Drawing shall be updated according to the comments on the GA drawing. -Approval is subjected to the approval of coordination package between multi-discipline.
426	93M-0407-ACC-60L11-DWG-90426-A	-Drawing shall be updated according to the comments on the GA drawing. -Approval is subjected to the approval of coordination package between multi-discipline.
427	93M-0407-ACC-60L11-DWG-90427-A	-Drawing shall be updated according to the comments on the GA drawing. -Approval is subjected to the approval of coordination package between multi-discipline.
428	93M-0407-ACC-60L11-DWG-90428-A	-Drawing shall be updated according to the comments on the GA drawing. -Approval is subjected to the approval of coordination package between multi-discipline.

429	93M-0407-ACC-60L11-DWG-90429-A	-Drawing shall be updated according to the comments on the GA drawing. -Approval is subjected to the approval of coordination package between multi-discipline.
430	93M-0407-ACC-60L11-DWG-90430-A	-Drawing shall be updated according to the comments on the GA drawing. -Approval is subjected to the approval of coordination package between multi-discipline.
431	93M-0407-ACC-60L11-DWG-90431-A	-Drawing shall be updated according to the comments on the GA drawing. -Approval is subjected to the approval of coordination package between multi-discipline.
432	93M-0407-ACC-60L11-DWG-90432-A	-Drawing shall be updated according to the comments on the GA drawing. -Approval is subjected to the approval of coordination package between multi-discipline.
433	93M-0407-ACC-60L11-DWG-90433-A	-Drawing shall be updated according to the comments on the GA drawing. -Approval is subjected to the approval of coordination package between multi-discipline.
434	93M-0407-ACC-60L11-DWG-90434-A	-Drawing shall be updated according to the comments on the GA drawing. -Approval is subjected to the approval of coordination package between multi-discipline.
435	93M-0407-ACC-60L11-DWG-90435-A	-Drawing shall be updated according to the comments on the GA drawing. -Approval is subjected to the approval of coordination package between multi-discipline.
436	93M-0407-ACC-60L11-DWG-90436-A	-Drawing shall be updated according to the comments on the GA drawing. -Approval is subjected to the approval of coordination package between multi-discipline.
437	93M-0407-ACC-60L11-DWG-90437-A	-Drawing shall be updated according to the comments on the GA drawing. -Approval is subjected to the approval of coordination package between multi-discipline.
438	93M-0407-ACC-60L11-DWG-90438-A	-Drawing shall be updated according to the comments on the GA drawing. -Approval is subjected to the approval of coordination package between multi-discipline.
439	93M-0407-ACC-60L11-DWG-90439-A	-Drawing shall be updated according to the comments on the GA drawing. -Approval is subjected to the approval of coordination package between multi-discipline.
440	93M-0407-ACC-60L11-DWG-90440-A	-Drawing shall be updated according to the comments on the GA drawing. -Approval is subjected to the approval of

		coordination package between multi-discipline.
441	93M-0407-ACC-60L11-DWG-90441-A	-Drawing shall be updated according to the comments on the GA drawing. -Approval is subjected to the approval of coordination package between multi-discipline.
442	93M-0407-ACC-60L11-DWG-90442-A	-Drawing shall be updated according to the comments on the GA drawing. -Approval is subjected to the approval of coordination package between multi-discipline.
443	93M-0407-ACC-60L11-DWG-90443-A	-Drawing shall be updated according to the comments on the GA drawing. -Approval is subjected to the approval of coordination package between multi-discipline.
444	93M-0407-ACC-60L11-DWG-90444-A	-Drawing shall be updated according to the comments on the GA drawing. -Approval is subjected to the approval of coordination package between multi-discipline.

- It is the contractor responsibility to ensure and revise all Dimensions and levels with the approved design drawings besides the coordination package before commencing any site Works.

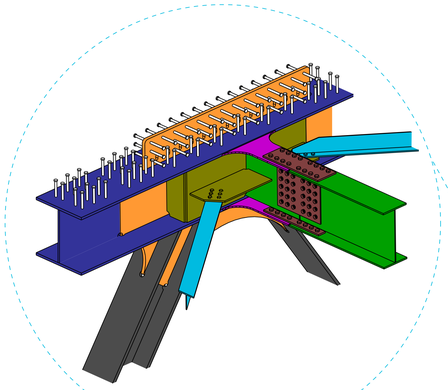

DETAIL 6

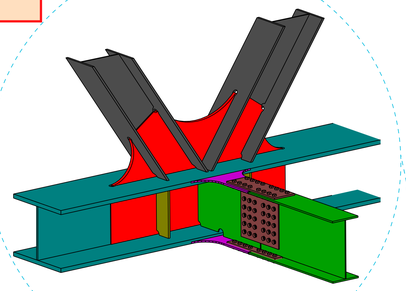

DETAIL 4

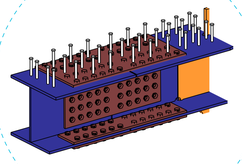

DETAIL 12

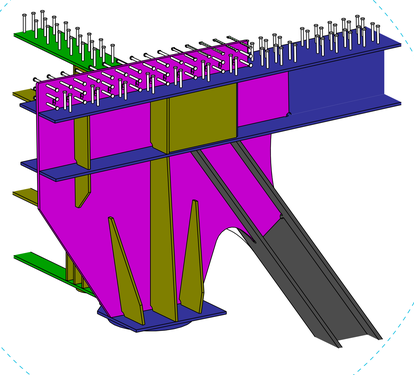

DETAIL 7

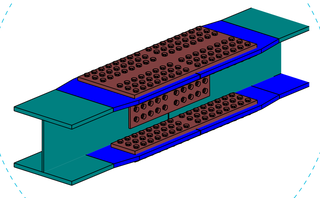

DETAIL-11

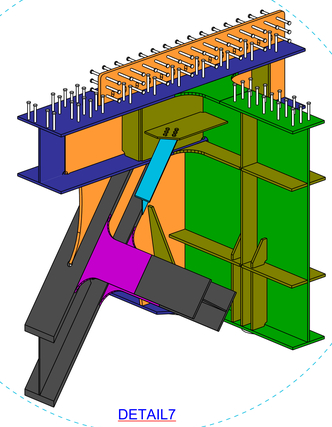

DETAIL7

-Approval is subjected to the approval of coordination package between multi-discipline.

REVIEWED WITH COMMENT MONORAILS PROJECT

GENERAL NOTES:

1. ALL DIMENSIONS ARE IN MILLIMETERS UNLESS OTHERWISE SPECIFIED.
2. LEVELS ARE IN METERS
3. DESIGN SERVICE LIFE OF 100 YEARS.
4. FLANGES OF TOP AND BOTTOM CHORDS TO BE SUPPLIED WITH IMPROVED THROUGH THICKNESS PROPERTIES Z25 ACCORDING TO EN10164.

REFERENCE DRAWINGS

1	93M-0407-SEN-6OL11-END-10118-B PAGE 01:17
2	
3	
4	
5	
6	
7	
8	
9	
10	
11	

6TH OF OCTOBER CITY RAIL TRANSIT MONORAIL &
NEW CAPITAL CITY RAIL TRANSIT MONORAIL

The Authority — Hill International Authority Consultant

Main Contractor

Designer

6 October Monorail
Engineering Unit
Valid For Construction

CONTRACTOR
CONSULTANT
ENGINEERING HOUSE FOR CONSULTANCY

SCALE: AS SHOWN | SHOP DRAWING | DATE: 20.11.2024

DRAWING TITLE:
6TH OF OCTOBER MONORAIL
SHOP DRAWING FOR BRIDGE 6OL11-37
STEEL TRUSS (I).
3D-VIEW

REV	DATE	BY	DESCRIPTION	CHK	APD
A	20-11-24	M.SH	ISSUE FOR APPROVAL	A.SH	M.M

Project Code	Rubric	Initiator	Lot	Ref	Number	Revision
93M	0407	ACC	60L11	DWG	90001	A

-Approval is subjected to the approval of coordination package between multi-discipline.

REVIEWED WITH COMMENT MONORAILS PROJECT

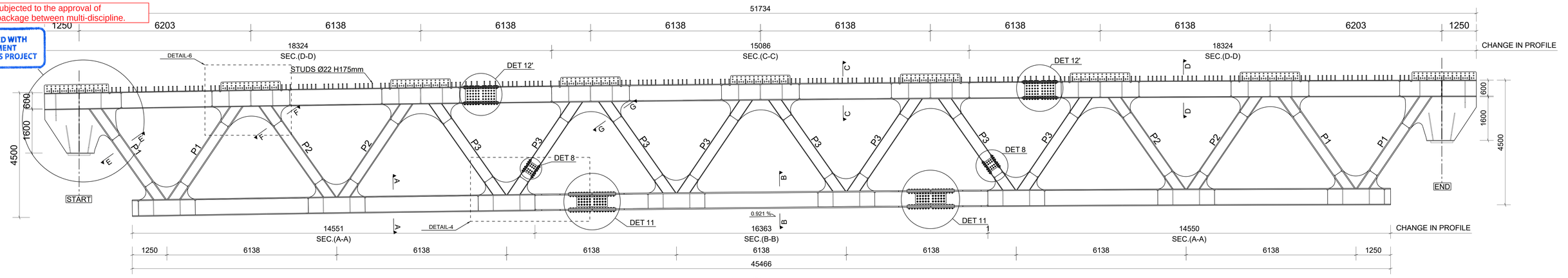

ELEVATION
1:50

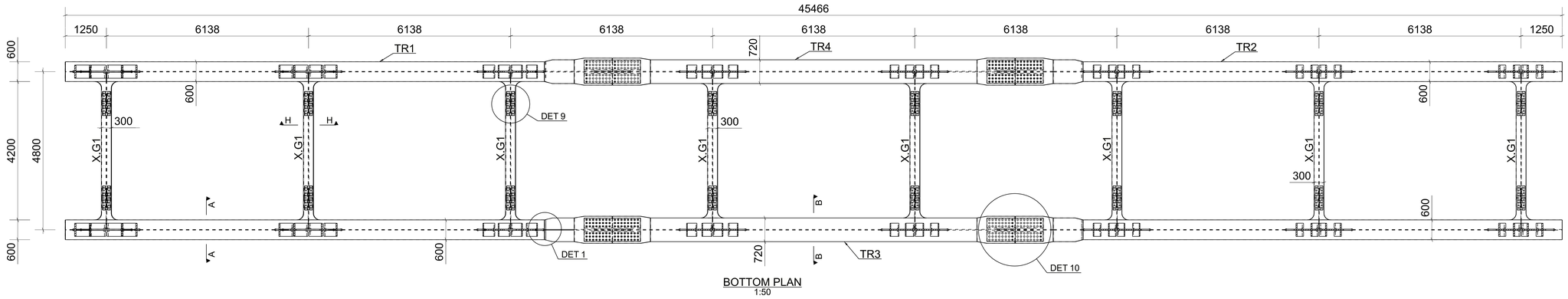

BOTTOM PLAN
1:50

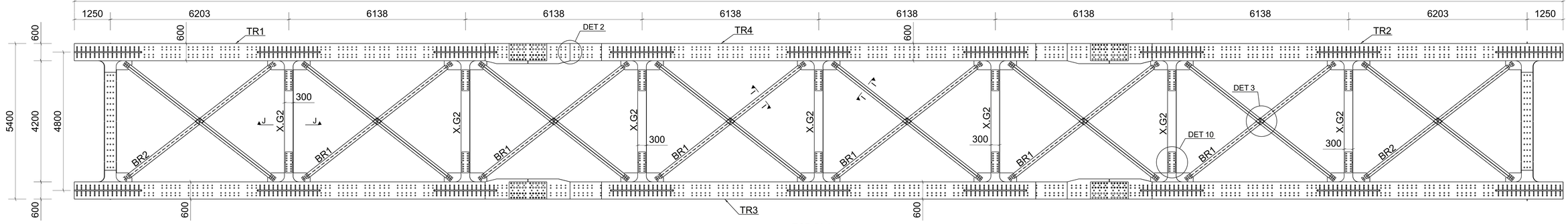

TOP PLAN
1:50

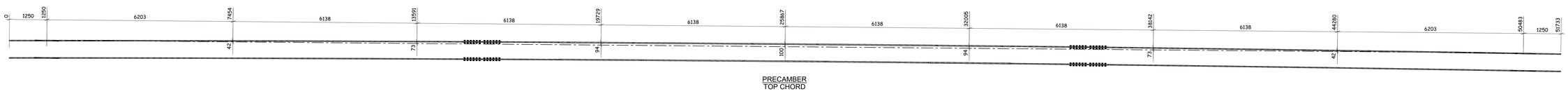

PRECAMBER
TOP CHORD

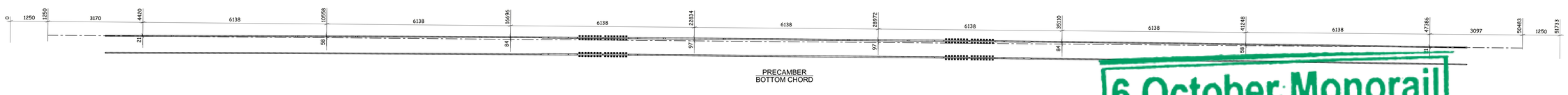

PRECAMBER
BOTTOM CHORD

STRUCTURAL STEEL
- PLATES: t ≤ 40mm S355J2N [EN 10025 : 2018] t > 40mm S355K2N [EN 10025 : 2018] - SHAPES (UPN 200) S355J0N [EN 10025:2018]

SHEAR CONNECTOR
STUD Ø22 h=175mm S235J2G3+C450 ST37-3K DIN17100

GENERAL NOTES:

1. ALL DIMENSIONS ARE IN MILLIMETERS UNLESS OTHERWISE SPECIFIED.
2. LEVELS ARE IN METERS
3. DESIGN SERVICE LIFE OF 100 YEARS.
4. FLANGES OF TOP AND BOTTOM CHORDS TO BE SUPPLIED WITH IMPROVED THROUGH THICKNESS PROPERTIES Z25 ACCORDING TO EN10164.

REFERENCE DRAWINGS

1	93M-0407-SEN-6OL11-END-10118-B PAGE 01:17
2	
3	
4	
5	
6	
7	
8	
9	
10	
11	

6TH OF OCTOBER CITY RAIL TRANSIT MONORAIL &
NEW CAPITAL CITY RAIL TRANSIT MONORAIL

The Authority — Hill International Authority Consultant

Main Contractor

Designer

6 October Monorail Engineering Unit
Valid For Construction

CONTRACTOR
CONSULTANT
ENGINEERING HOUSE FOR CONSULTANCY

SCALE: AS SHOWN | SHOP DRAWING | DATE: 20.11.2024

REV	DATE	BY	DESCRIPTION	CHK	APD
A	20-11-24	M.SH	ISSUE FOR APPROVAL	A.SH	M.M

DRAWING TITLE:
6TH OF OCTOBER MONORAIL
SHOP DRAWING FOR BRIDGE 6OL11-37
STEEL TRUSS (I).
GENERAL LAYOUT

Project Code	Rubric	Initiator	Lot	Ref	Number	Revision
9 3 M	0 4 0 7	A C C	6 0 L 1 1	D W G	90002	A

Hella structures

-Approval is subjected to the approval of coordination package between multi-discipline.

REVIEWED WITH COMMENT
MONORAILS PROJECT

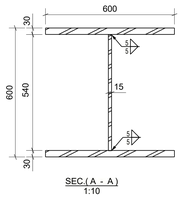

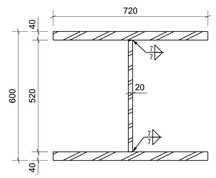

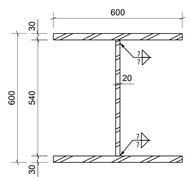

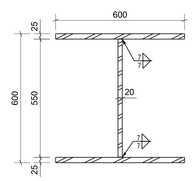

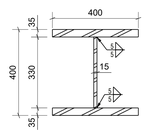

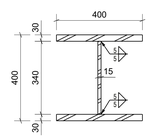

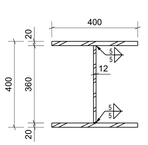

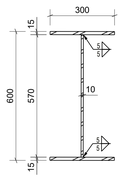

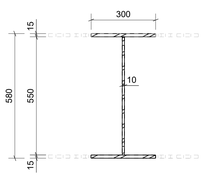

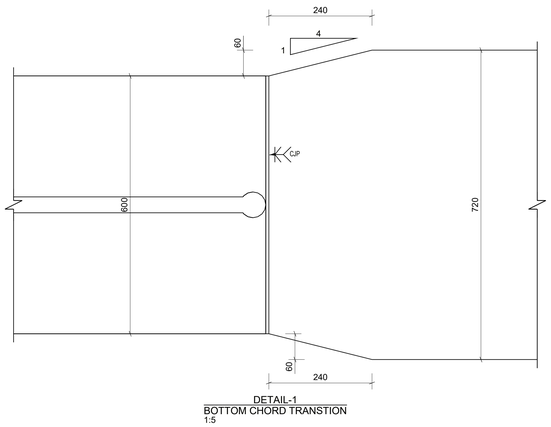

DETAIL-1
BOTTOM CHORD TRANSTION
1:5

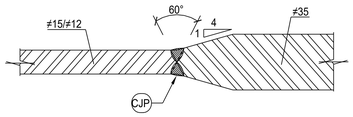

DETAIL WELD WEB TRANSITION
≠15/≠12 TO ≠35
(FOR BOTTOM CHORDS AND BRACE MEMBERS)
SCALE 1:2

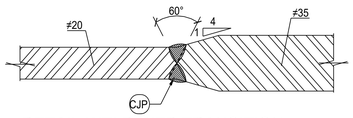

DETAIL WELD WEB TRANSITION
≠20 TO ≠35
(FOR CHORDS)
SCALE 1:2

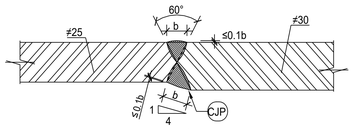

DETAIL WELD FLANGE TRANSITION
≠25 TO ≠30
(FOR TOP CHORDS)
SCALE 1:2

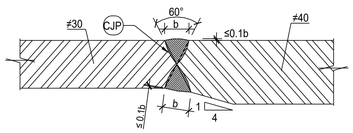

DETAIL WELD FLANGE TRANSITION
≠30 TO ≠40
(FOR BOTTOM CHORDS)
SCALE 1:2

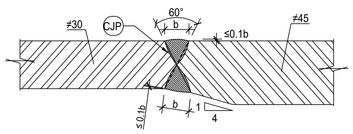

DETAIL WELD FLANGE TRANSITION
≠30 TO ≠45
(FOR BOTTOM CHORDS)
SCALE 1:2

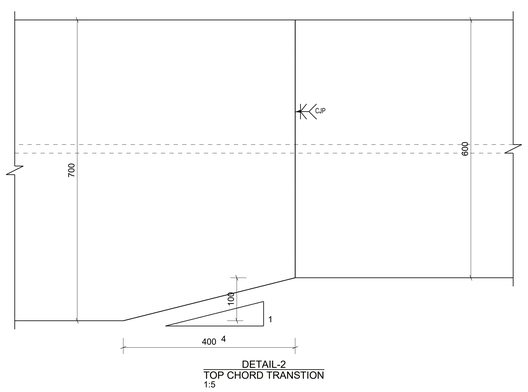

DETAIL-2
TOP CHORD TRANSTION
1:5

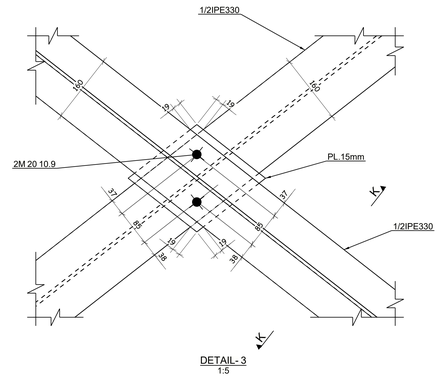

DETAIL-3
1:5

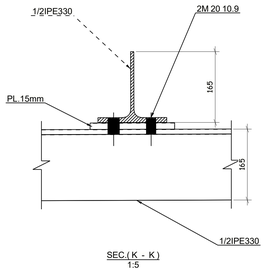

SEC.(K - K)
1:5

STRUCTURAL STEEL
- PLATES: t ≤ 40mm S355J2N [EN 10025 : 2018] t > 40mm S355K2N [EN 10025 : 2018] - SHAPES (UPN 200) S355J0N [EN 10025:2018]

SHEAR CONNECTOR
STUD Ø22 h=175mm S235J2G3+C450 ST37-3K DIN17100

FILLET WELDS
- UNLESS NOTED OTHERWISE, ALL FILLET WELDS SHALL BE CONTINUOUS. - FILLET WELDS SHALL BE MADE FROM BOTH SIDES (SYMMETRICAL BEADS). - EFFECTIVE THROAT THICKNESSES ARE DEFINED (THEY SHOULD BE MULTIPLIED BY 1.41 TO GET THE LEG LENGTHS).
GROOVE WELDS
- ALL GROOVE WELDS SHALL BE MADE COMPLETE JOINT PENETRATION (CJP). BUTT JOINTS SHALL BE MADE WITH RUN-OFF PLATES. RUN-OFF PLATES SHALL BE REMOVED AFTER WELDING, GROUNDING THE EDGE IN THE DIRECTION OF STRESSES.
- STEEL TO BE PAINTED IN ACCORDANCE WITH PROJECT SPECIFICATIONS. (CORROSIVITY CATEGORY C4 DURABILITY VERY HIGH) - QUALITY CONTROL IN ACCORDANCE WITH PROJECT SPECIFICATIONS. (EXECUTION LEVEL EXC3 ACCORDING TO EN1090-2:2019)

SYMBOL	DESCRIPTION
e →	FILLET WELD OF EFFECTIVE THROAT THICKNESS (e)mm.
e →	FILLET WELD OF EFFECTIVE THROAT THICKNESS (e)mm, BOTH SIDES.
PP →	PARTIAL PENETRATION WELD.
CJP →	COMPLETE JOINT PENETRATION.
→	ALL AROUND WELD.
→	FIELD WELD.
UT % →	ULTRASONIC TEST %

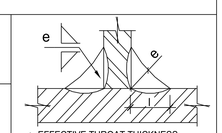

GENERAL NOTES:

1. ALL DIMENSIONS ARE IN MILLIMETERS UNLESS OTHERWISE SPECIFIED.
2. LEVELS ARE IN METERS
3. DESIGN SERVICE LIFE OF 100 YEARS.
4. FLANGES OF TOP AND BOTTOM CHORDS TO BE SUPPLIED WITH IMPROVED THROUGH THICKNESS PROPERTIES Z25 ACCORDING TO EN10164.

REFERENCE DRAWINGS

1	93M-0407-SEN-6OL11-END-10118-B PAGE 01:17
2	
3	
4	
5	
6	
7	
8	
9	
10	
11	

6TH OF OCTOBER CITY RAIL TRANSIT MONORAIL &
NEW CAPITAL CITY RAIL TRANSIT MONORAIL

The Authority — Hill International — Authority Consultant
Main Contractor
Designer

6 October Monorail Engineering Unit
Valid For Construction

CONTRACTOR
CONSULTANT
ENGINEERING HOUSE FOR CONSULTANCY

SCALE: AS SHOWN
SHOP DRAWING
DATE: 20.11.2024

DRAWING TITLE:
6TH OF OCTOBER MONORAIL
SHOP DRAWING FOR BRIDGE 6OL11-37
STEEL TRUSS (I).
PROFILE SECTIONS

REV	DATE	BY	DESCRIPTION	CHK	APD
A	20-11-24	M.SH	ISSUE FOR APPROVAL	A.SH	M.M

Project Code	Rubric	Initiator	Lot	Ref	Number	Revision
93M	0407	ACC	60L111	DWG	90003	A

-Approval is subjected to the approval of coordination package between multi-discipline.

REVIEWED WITH COMMENT MONORAILS PROJECT

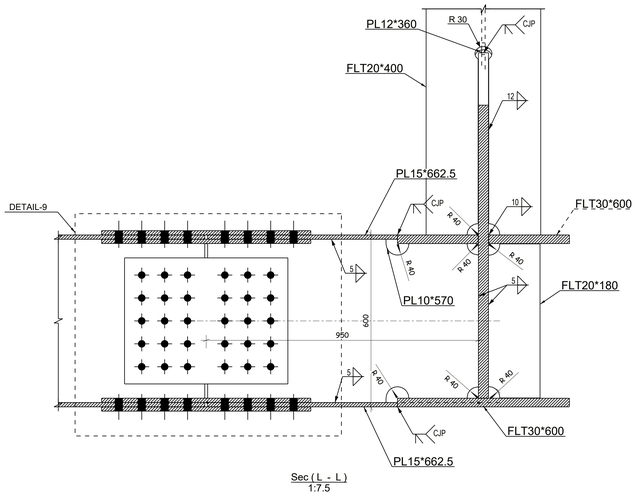

Sec (L - L)
1:7.5

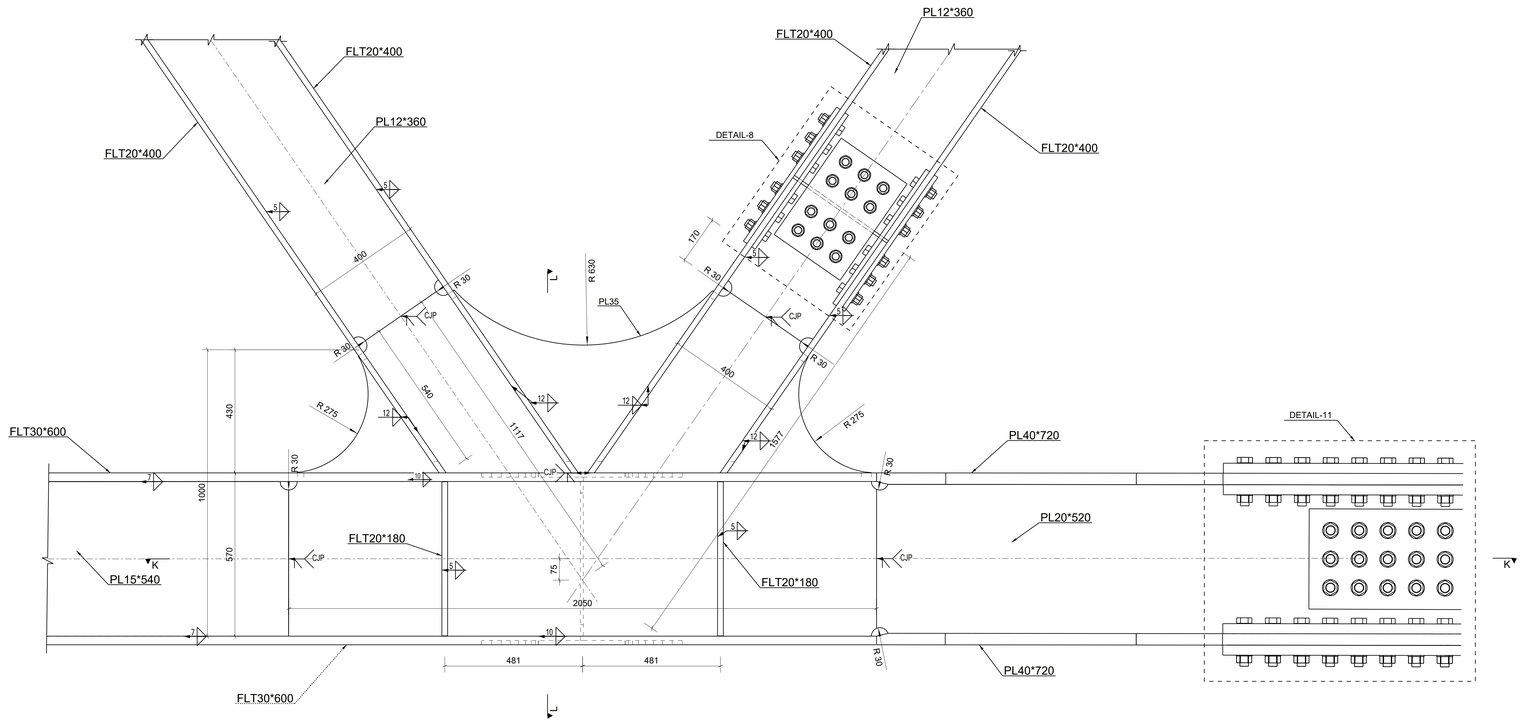

DETAIL 4
1:7.5

STRUCTURAL STEEL
- PLATES: t £ 40mm S355J2N [EN 10025 : 2018] t > 40mm S355K2N [EN 10025 : 2018] - SHAPES (UPN 200) S355J0N [EN 10025:2018]

SHEAR CONNECTOR
STUD Ø22 h=175mm S235J2G3+C450 ST37-3K DIN17100

FILLET WELDS
- UNLESS NOTED OTHERWISE, ALL FILLET WELDS SHALL BE CONTINUOUS. - FILLET WELDS SHALL BE MADE FROM BOTH SIDES (SYMMETRICAL BEADS). - EFFECTIVE THROAT THICKNESSES ARE DEFINED (THEY SHOULD BE MULTIPLIED BY 1.41 TO GET THE LEG LENGTHS).
GROOVE WELDS
- ALL GROOVE WELDS SHALL BE MADE COMPLETE JOINT PENETRATION (CJP). BUTT JOINTS SHALL BE MADE WITH RUN-OFF PLATES. RUN-OFF PLATES SHALL BE REMOVED AFTER WELDING, GROUNDING THE EDGE IN THE DIRECTION OF STRESSES.
- STEEL TO BE PAINTED IN ACCORDANCE WITH PROJECT SPECIFICATIONS. (CORROSIVITY CATEGORY C4 DURABILITY VERY HIGH) - QUALITY CONTROL IN ACCORDANCE WITH PROJECT SPECIFICATIONS. (EXECUTION LEVEL EXC3 ACCORDING TO EN1090-2:2019)

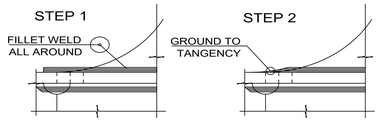

DETAIL-5
SCALE 1:7.5

SYMBOL	DESCRIPTION
e	FILLET WELD OF EFFECTIVE THROAT THICKNESS (e)mm.
e	FILLET WELD OF EFFECTIVE THROAT THICKNESS (e)mm, BOTH SIDES.
PP	PARTIAL PENETRATION WELD.
CJP	COMPLETE JOINT PENETRATION.
	ALL AROUND WELD.
	FIELD WELD.
UT x%	ULTRASONIC TEST AT x%.

e=EFFECTIVE THROAT THICKNESS
l=LEG

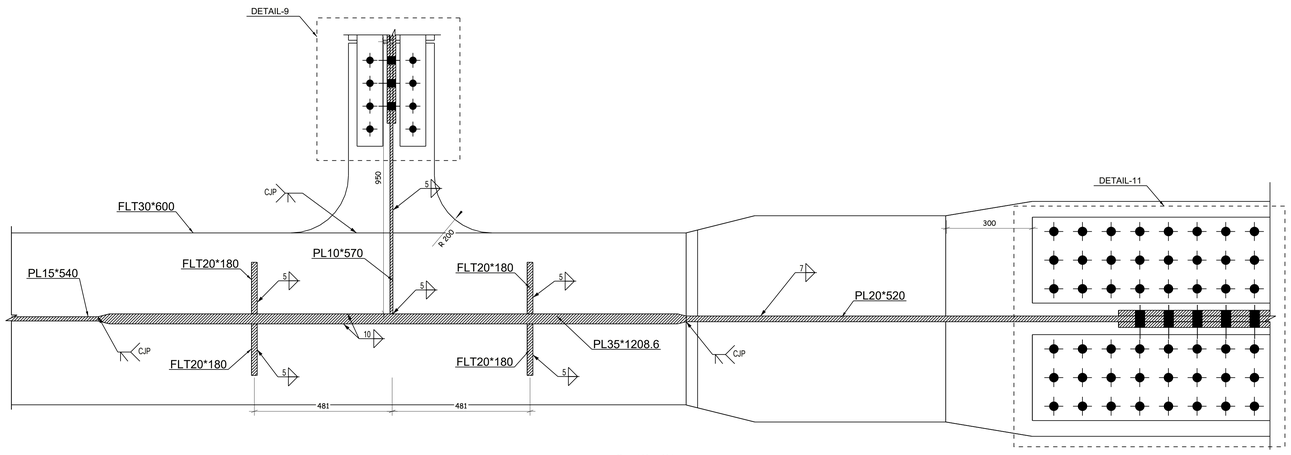

Sec (K - K)
1:7.5

GENERAL NOTES:

1. ALL DIMENSIONS ARE IN MILLIMETERS UNLESS OTHERWISE SPECIFIED.
2. LEVELS ARE IN METERS
3. DESIGN SERVICE LIFE OF 100 YEARS.
4. FLANGES OF TOP AND BOTTOM CHORDS TO BE SUPPLIED WITH IMPROVED THROUGH THICKNESS PROPERTIES Z25 ACCORDING TO EN10164.

REFERENCE DRAWINGS

1	93M-0407-SEN-6OL11-END-10118-B PAGE 01:17
2	
3	
4	
5	
6	
7	
8	
9	
10	
11	

6TH OF OCTOBER CITY RAIL TRANSIT MONORAIL &
NEW CAPITAL CITY RAIL TRANSIT MONORAIL

The Authority — Hill International Authority Consultant — Main Contractor — Designer

6 October Monorail Engineering Unit
Valid For Construction

CONTRACTOR
CONSULTANT
ENGINEERING HOUSE FOR CONSULTANCY

SCALE	SHOP DRAWING	DATE
AS SHOWN		20.11.2024

DRAWING TITLE:
6TH OF OCTOBER MONORAIL
SHOP DRAWING FOR BRIDGE 6OL11-37
STEEL TRUSS (I).
DETAIL-4

REV	DATE	BY	DESCRIPTION	CHK	APD
A	20-11-24	M.SH	ISSUE FOR APPROVAL	A.SH	M.M

Project Code	Rubric	Initiator	Lot	Ref	Number	Revision
93M	0407	ACC	60L11	DWG	90004	A

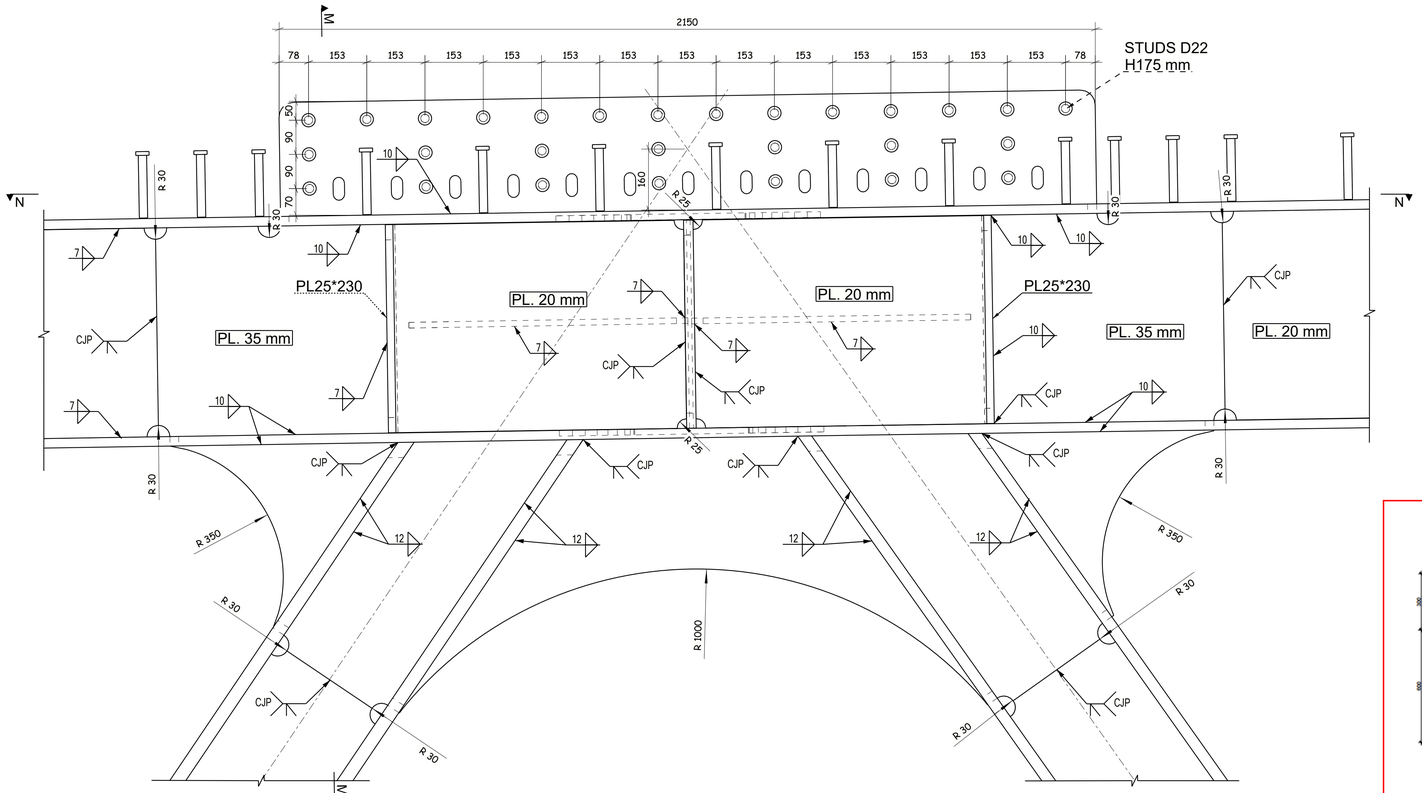

DETAIL-06
1:7.5

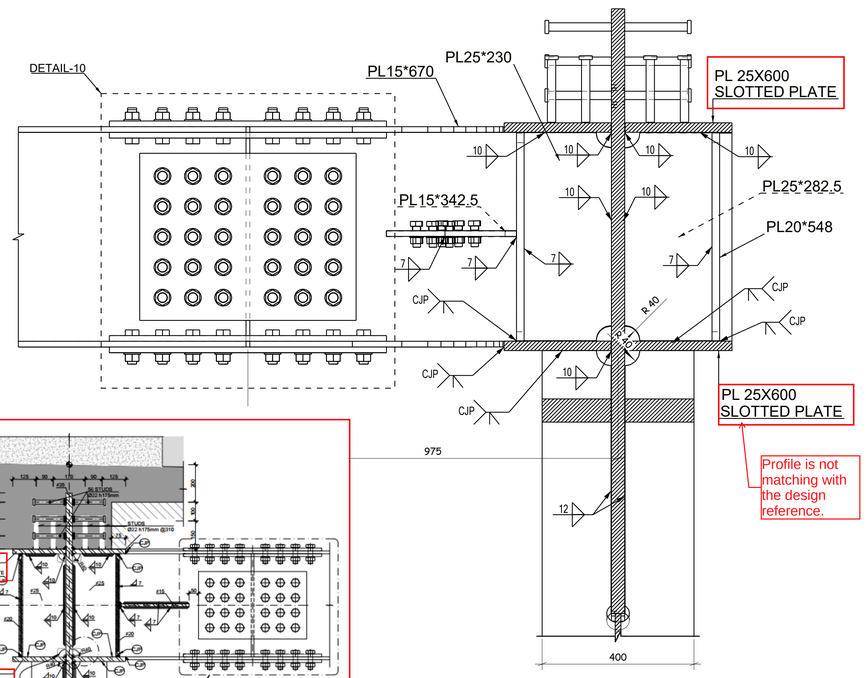

Sec (M - M)
1:7.5

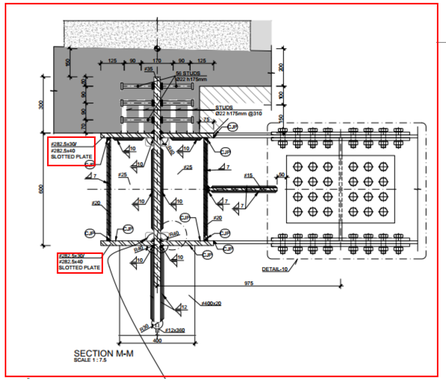

Please clarify.

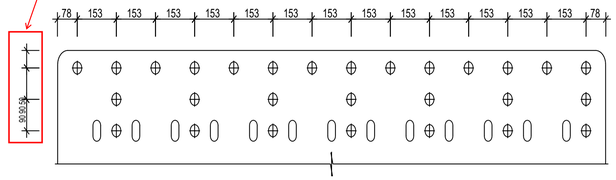

DISTRIBUTION OF HORIZONTAL STUDS
OUTER SIDE
SCALE 1:10

Please clarify.

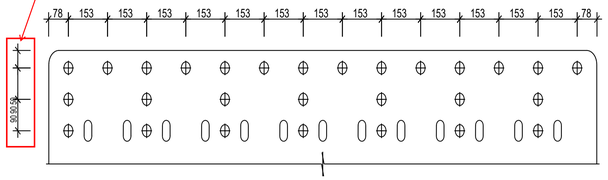

DISTRIBUTION OF HORIZONTAL STUDS
INNER SIDE
SCALE 1:10

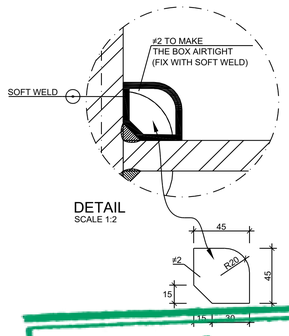

DETAIL
SCALE 1:2

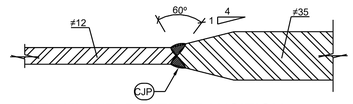

DETAIL WELD WEB TRANSITION
≠12 TO ≠35
(FOR BRACE MEMBERS)
SCALE 1:2

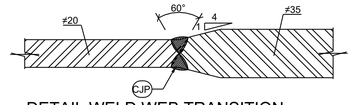

DETAIL WELD WEB TRANSITION
≠20 TO ≠35
(FOR TOP CHORDS)
SCALE 1:2

REVIEWED WITH COMMENT
MONORAILS PROJECT

6 October Monorail
Engineering Unit
Valid For Construction

GENERAL NOTES:

1. ALL DIMENSIONS ARE IN MILLIMETERS UNLESS OTHERWISE SPECIFIED.
2. LEVELS ARE IN METERS
3. DESIGN SERVICE LIFE OF 100 YEARS.
4. FLANGES OF TOP AND BOTTOM CHORDS TO BE SUPPLIED WITH IMPROVED THROUGH THICKNESS PROPERTIES Z25 ACCORDING TO EN10164.

REFERENCE DRAWINGS

1	93M-0407-SEN-6OL11-END-10118-B PAGE 01:17
2	
3	
4	
5	
6	
7	
8	
9	
10	
11	

6TH OF OCTOBER CITY RAIL TRANSIT MONORAIL &
NEW CAPITAL CITY RAIL TRANSIT MONORAIL

The Authority — Hill International — Authority Consultant
ORASCOM CONSTRUCTION — BOMBARDIER — Main Contractor
SENER — SHAKER CONSULTANCY GROUP — Designer

CONTRACTOR
CONSULTANT:
EHC
ENGINEERING HOUSE FOR CONSULTANCY

SCALE: AS SHOWN
SHOPDRAWING
DATE: 20-11-2024

REV	DATE	BY	DESCRIPTION	CHK	APD
A	20-11-24	M.SH	ISSUE FOR APPROVAL	A.SH	M.M

DRAWING TITLE:
6TH OF OCTOBER MONORAIL
SHOP DRAWING FOR BRIDGE 6OL11-37
STEEL TRUSS (I).
DETAIL-6.01

Project Code	Rubric	Initiator	Lot	Ref	Number	Revision
9 3 M	0 4 0 7	A C C	6 0 L 1 1	D W G	90005	A

Talia structures

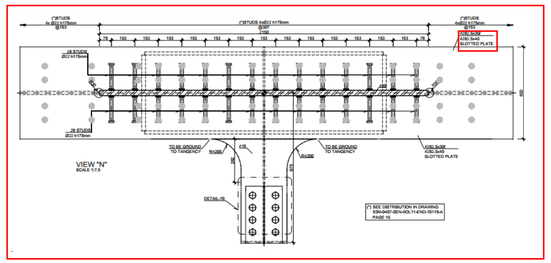
VIEW "N"
SCALE 1:7.5
DETAIL-10
DETAIL-16
TO BE GROUND TO TANGENCY
#35
#30
#30
#35
#30
#30
#35
#30
#30

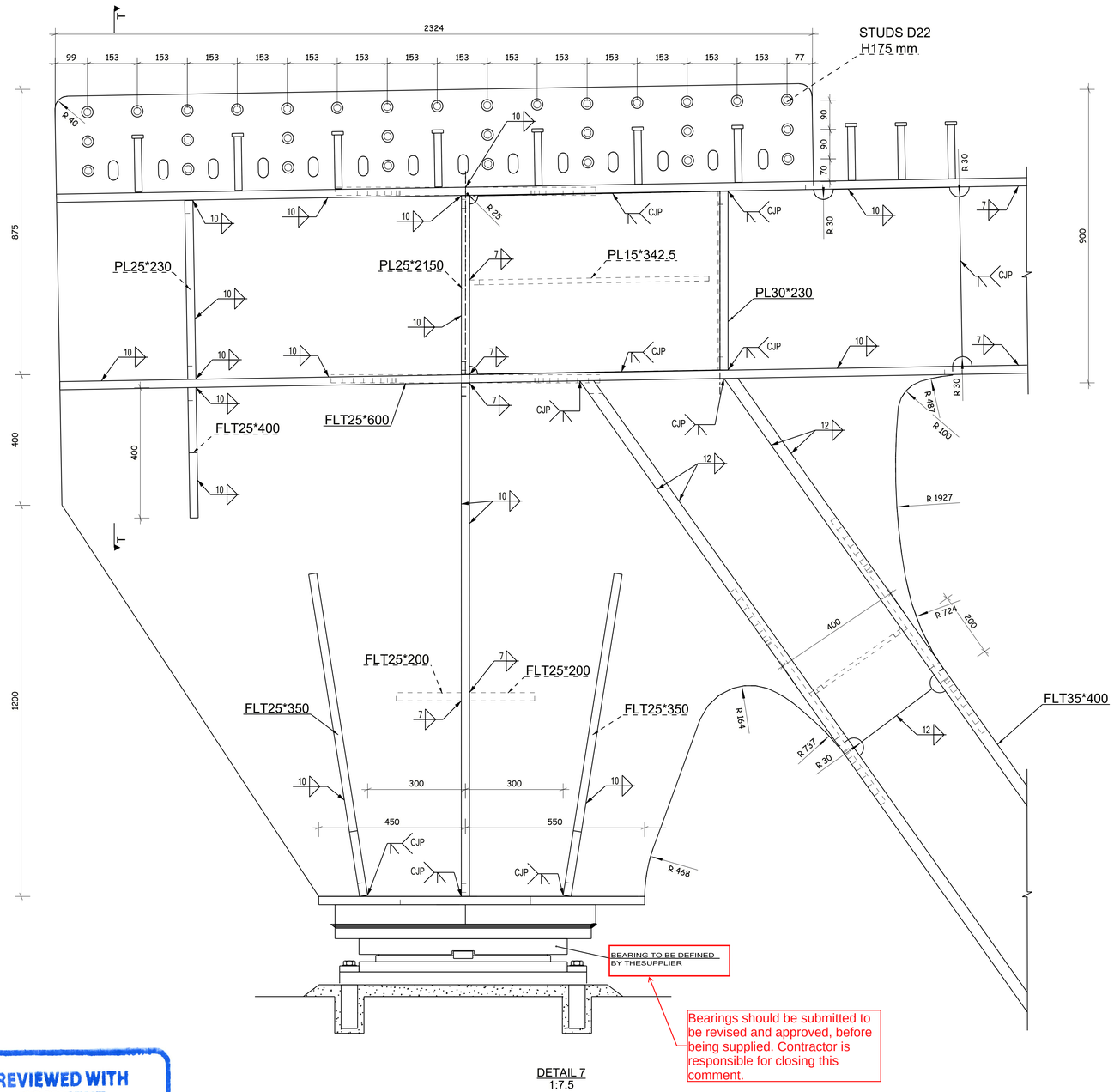

DETAIL 7
1:7.5

Bearings should be submitted to be revised and approved, before being supplied. Contractor is responsible for closing this comment.

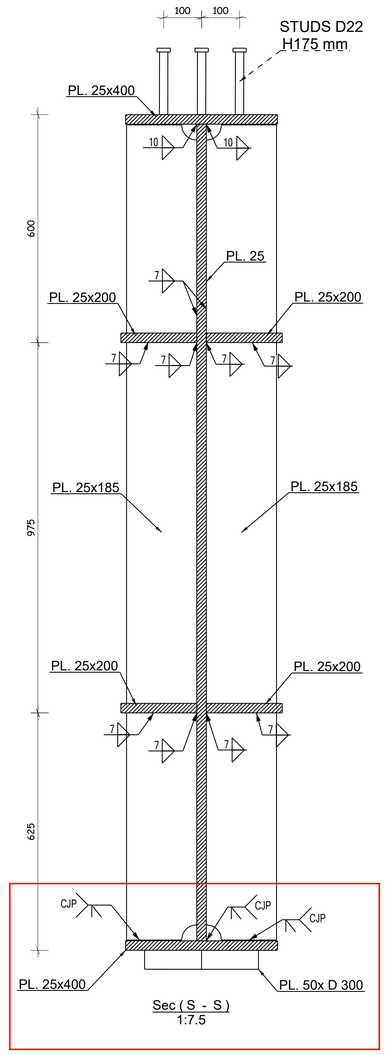

Sec (S - S)
1:7.5

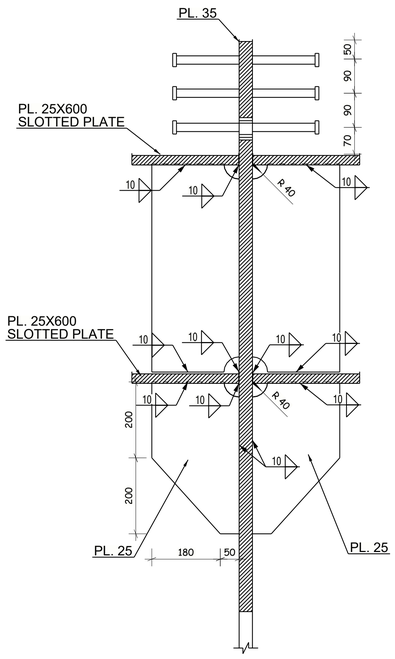

Sec (T - T)
1:7.5

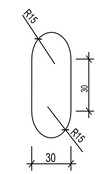

HOLE FOR REINFORCEMENT CROSSING
SCALE 1:2

REVIEWED WITH COMMENT
MONORAILS PROJECT

6 October Monorail
Engineering Unit
Valid For Construction

GENERAL NOTES:

1. ALL DIMENSIONS ARE IN MILLIMETERS UNLESS OTHERWISE SPECIFIED.
2. LEVELS ARE IN METERS
3. DESIGN SERVICE LIFE OF 100 YEARS.
4. FLANGES OF TOP AND BOTTOM CHORDS TO BE SUPPLIED WITH IMPROVED THROUGH THICKNESS PROPERTIES Z25 ACCORDING TO EN10164.

REFERENCE DRAWINGS

1	93M-0407-SEN-6OL11-END-10118-B PAGE 01:17
2	
3	
4	
5	
6	
7	
8	
9	
10	
11	

6TH OF OCTOBER CITY RAIL TRANSIT MONORAIL &
NEW CAPITAL CITY RAIL TRANSIT MONORAIL

The Authority — Hill International Authority Consultant
Main Contractor: ORASCOM CONSTRUCTION / BOMBARDIER
Designer: SENER / SHAKER

CONTRACTOR
CONSULTANT:
EHC
ENGINEERING HOUSE FOR CONSULTANCY

SCALE	SHOP DRAWING	DATE
AS SHOWN		20-11-2024

REV	DATE	BY	DESCRIPTION	CHK	APD
A	20-11-24	M.SH	ISSUE FOR APPROVAL	A.SH	M.M

DRAWING TITLE:
6TH OF OCTOBER MONORAIL
SHOP DRAWING FOR BRIDGE 6OL11-37
STEEL TRUSS (I).
DETAIL-7.01

Project Code	Rubric	Initiator	Lot	Ref	Number	Revision
9 3 M	0 4 0 7	A C C	6 0 L 1 1	D W G	90007	A

Tekla structures

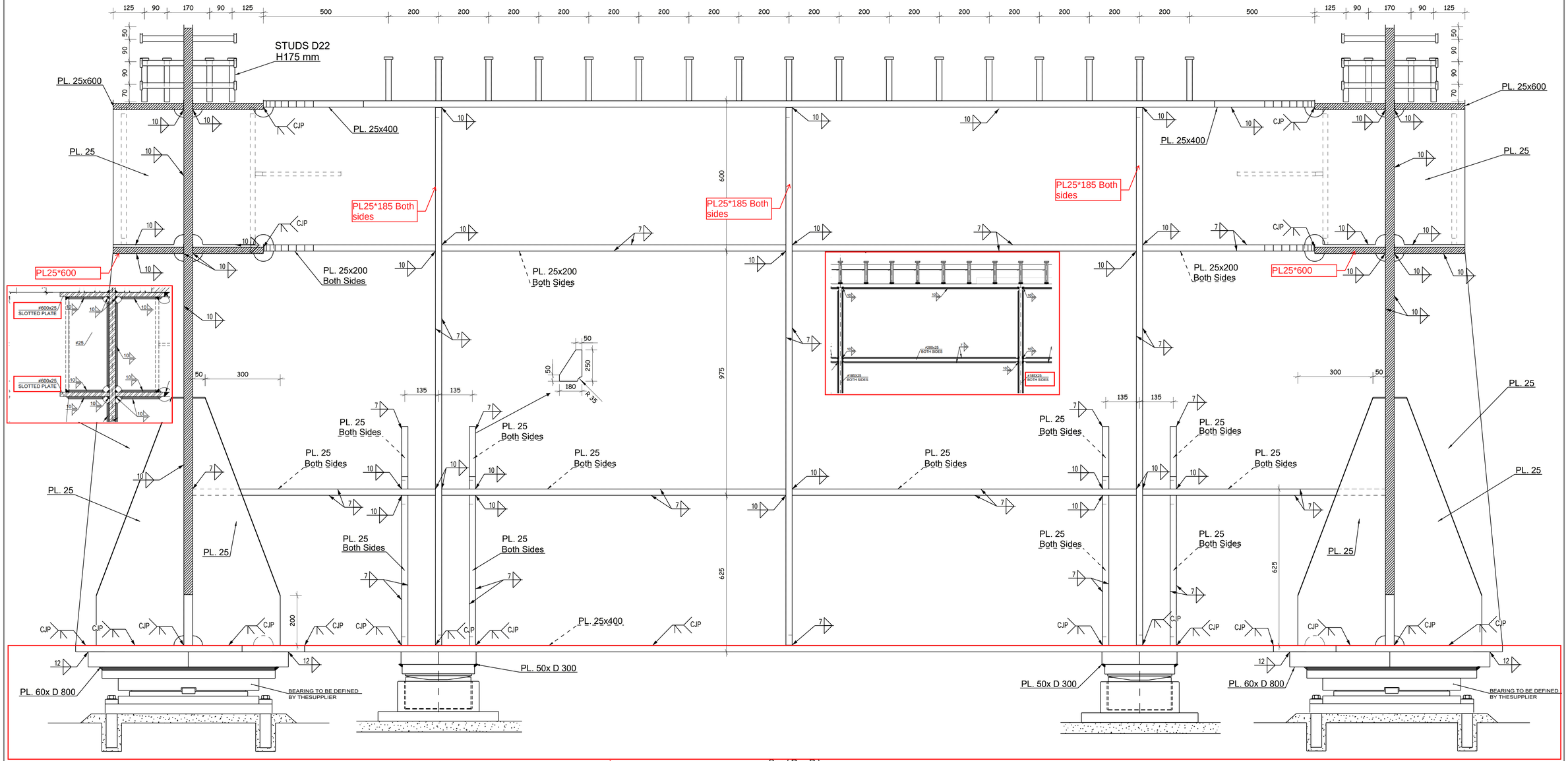

Sec (R - R)
1:7.5

Bearings should be submitted to be revised and approved, before being supplied. Contractor is responsible for closing this comment.

REVIEWED WITH COMMENT
MONORAILS PROJECT

6 October Monorail
Engineering Unit
Valid For Construction

GENERAL NOTES:

1. ALL DIMENSIONS ARE IN MILLIMETERS UNLESS OTHERWISE SPECIFIED.
2. LEVELS ARE IN METERS
3. DESIGN SERVICE LIFE OF 100 YEARS.
4. FLANGES OF TOP AND BOTTOM CHORDS TO BE SUPPLIED WITH IMPROVED THROUGH THICKNESS PROPERTIES Z25 ACCORDING TO EN10164.

REFERENCE DRAWINGS

1	93M-0407-SEN-6OL11-END-10118-B PAGE 01:17
2	
3	
4	
5	
6	
7	
8	
9	
10	
11	

6TH OF OCTOBER CITY RAIL TRANSIT MONORAIL &
NEW CAPITAL CITY RAIL TRANSIT MONORAIL

The Authority — Hill International Authority Consultant

Main Contractor: ORASCOM CONSTRUCTION / BOMBARDIER

Designer: SENER / SHAKER CONSULTANCY GROUP

CONTRACTOR CONSULTANT:
ENGINEERING HOUSE FOR CONSULTANCY

SCALE	SHOPDRAWING	DATE
AS SHOWN		20.11.2024

REV	DATE	BY	DESCRIPTION	CHK	APD
A	20-11-24	M.SH	ISSUE FOR APPROVAL	A.SH	M.M

DRAWING TITLE:
6TH OF OCTOBER MONORAIL
SHOP DRAWING FOR BRIDGE 6OL11-37
STEEL TRUSS (I).
DETAIL-7.02

Project Code	Rubric	Initiator	Lot	Ref	Number	Revision
9 3 M	0 4 0 7	A C C	6 0 L 1 1	D W G	90008	A

Tekla structures

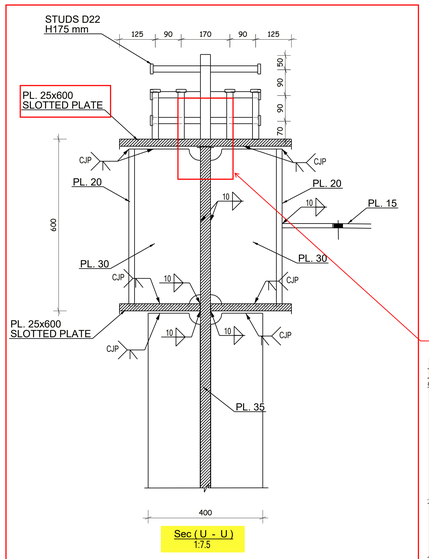

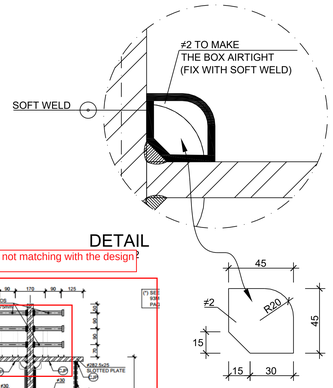

The connection is not matching with the design reference.

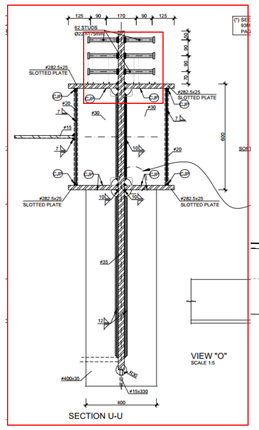

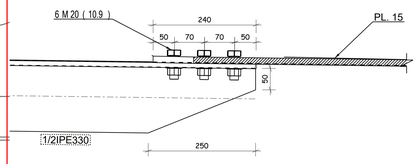

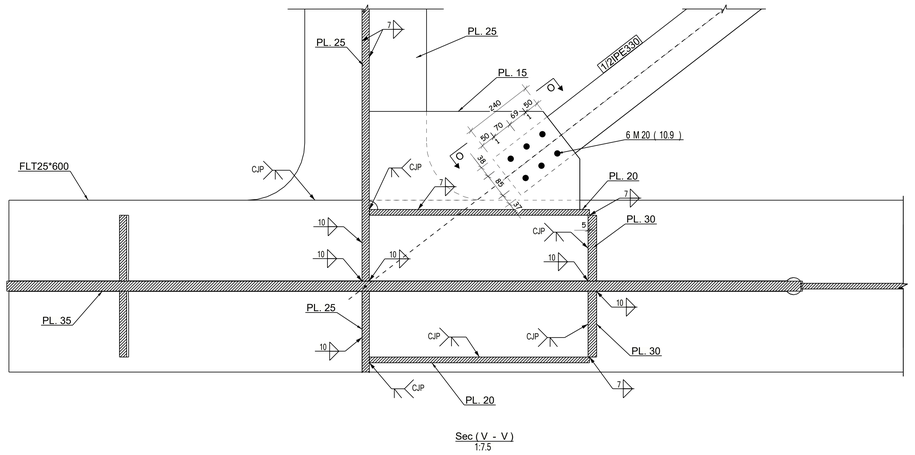

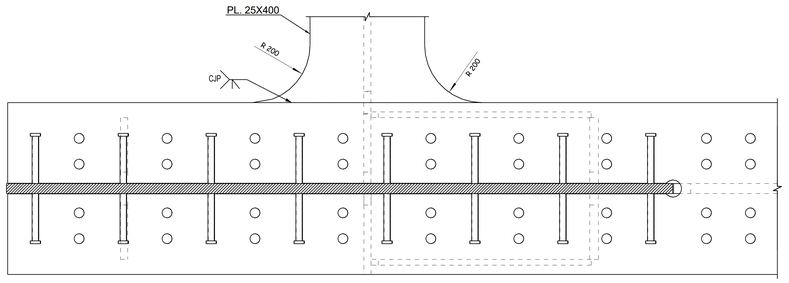

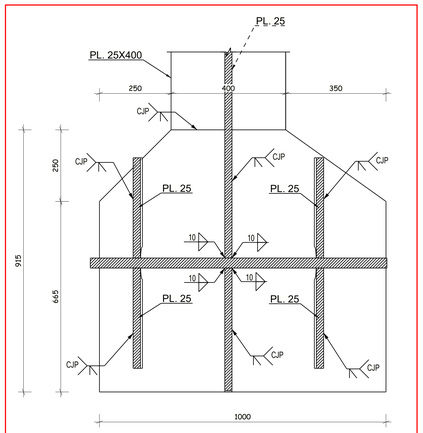

kindly provide the location of the highlighted connections.

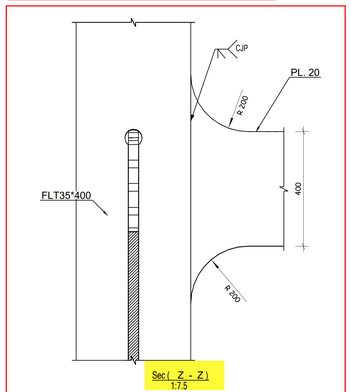

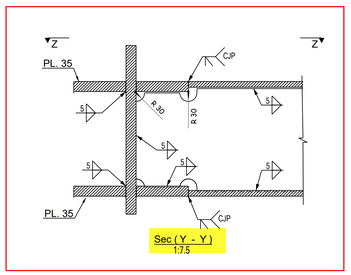

STRUCTURAL STEEL
- PLATES: t £ 40mm S355J2N [EN 10025 : 2018] t > 40mm S355K2N [EN 10025 : 2018] - SHAPES (UPN 200) S355J0N [EN 10025:2018]

SHEAR CONNECTOR
STUD Ø22 h=175mm S235J2G3+C450 ST37-3K DIN17100

FILLET WELDS
- UNLESS NOTED OTHERWISE, ALL FILLET WELDS SHALL BE CONTINUOUS. - FILLET WELDS SHALL BE MADE FROM BOTH SIDES (SYMMETRICAL BEADS). - EFFECTIVE THROAT THICKNESSES ARE DEFINED (THEY SHOULD BE MULTIPLIED BY 1.41 TO GET THE LEG LENGTHS).
GROOVE WELDS
- ALL GROOVE WELDS SHALL BE MADE COMPLETE JOINT PENETRATION (CJP). BUTT JOINTS SHALL BE MADE WITH RUN-OFF PLATES. RUN-OFF PLATES SHALL BE REMOVED AFTER WELDING, GROUNDING THE EDGE IN THE DIRECTION OF STRESSES.
- STEEL TO BE PAINTED IN ACCORDANCE WITH PROJECT SPECIFICATIONS. (CORROSIVITY CATEGORY C4 DURABILITY VERY HIGH) - QUALITY CONTROL IN ACCORDANCE WITH PROJECT SPECIFICATIONS. (EXECUTION LEVEL EXC3 ACCORDING TO EN1090-2:2019)

SYMBOL	DESCRIPTION
e	FILLET WELD OF EFFECTIVE THROAT THICKNESS (e)mm.
e	FILLET WELD OF EFFECTIVE THROAT THICKNESS (e)mm, BOTH SIDES.
PP	PARTIAL PENETRATION WELD.
CJP	COMPLETE JOINT PENETRATION.
	ALL AROUND WELD.
	FIELD WELD.
NDT No.	NDT ACCORDING TO EXT X%

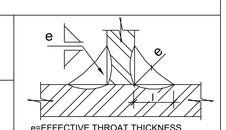

REVIEWED WITH COMMENT
MONORAILS PROJECT

GENERAL NOTES:

1. ALL DIMENSIONS ARE IN MILLIMETERS UNLESS OTHERWISE SPECIFIED.
2. LEVELS ARE IN METERS
3. DESIGN SERVICE LIFE OF 100 YEARS.
4. FLANGES OF TOP AND BOTTOM CHORDS TO BE SUPPLIED WITH IMPROVED THROUGH THICKNESS PROPERTIES Z25 ACCORDING TO EN10164.

REFERENCE DRAWINGS

1	93M-0407-SEN-6OL11-END-10118-B PAGE 01:17
2	
3	
4	
5	
6	
7	
8	
9	
10	
11	

6TH OF OCTOBER CITY RAIL TRANSIT MONORAIL &
NEW CAPITAL CITY RAIL TRANSIT MONORAIL

The Authority — Hill International — Authority Consultant
ORASCOM CONSTRUCTION — BOMBARDIER — Main Contractor
SENER — SHAKER CONSULTANCY GROUP — Designer

6 October Monorail
Engineering Unit
Valid For Construction

CONTRACTOR
CONSULTANT
ENGINEERING HOUSE FOR CONSULTANCY

SCALE: AS SHOWN | SHOP DRAWING | DATE: 20.11.2024

REV	DATE	BY	DESCRIPTION	CHK	APD
A	20-11-24	M.SH	ISSUE FOR APPROVAL	A.SH	M.M

DRAWING TITLE:
6TH OF OCTOBER MONORAIL
SHOP DRAWING FOR BRIDGE 6OL11-37
STEEL TRUSS (I).
Sections

Project Code	Rubric	Initiator	Lot	Ref	Number	Revision
9 3 M	0 4 0 7	A C C	6 0 L 1 1	D W G	90009	A

-Approval is subjected to the approval of coordination package between multi-discipline.

REVIEWED WITH COMMENT MONORAILS PROJECT

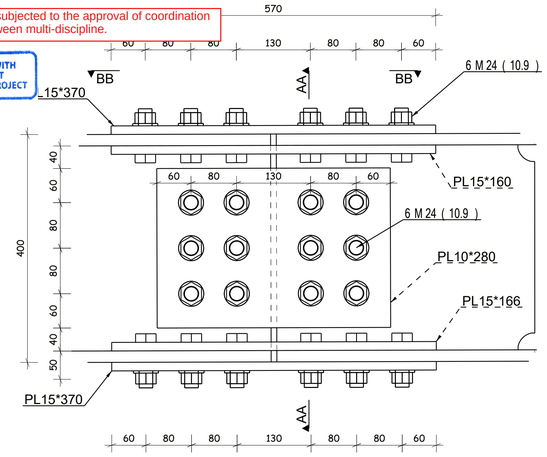

DETAIL 8
1:5

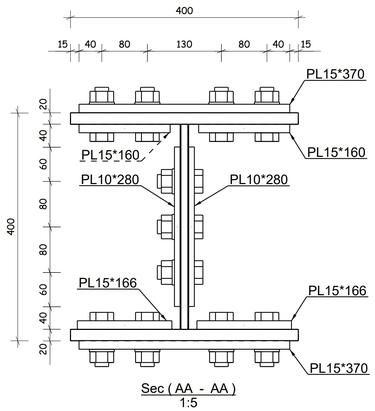

Sec (AA - AA)
1:5

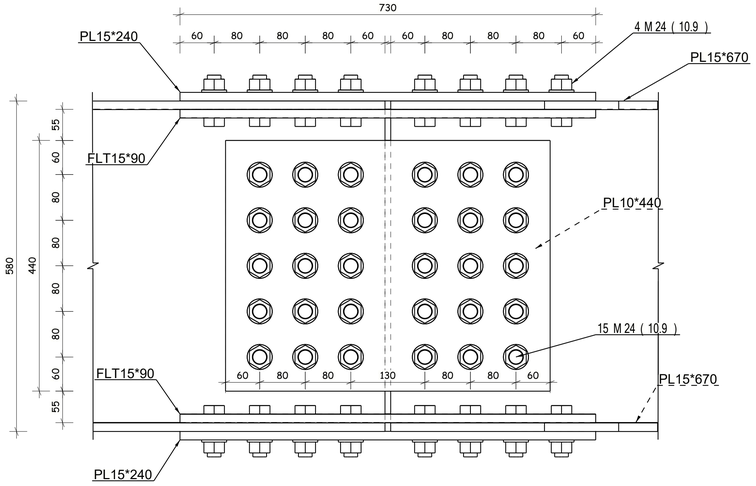

Sec (DD - DD)
1:5

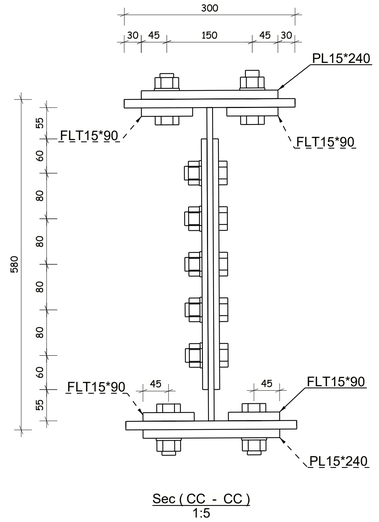

Sec (CC - CC)
1:5

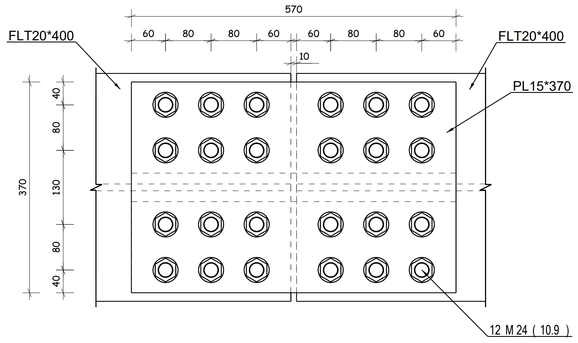

Sec (BB - BB)
1:5

PRELOAD LOADS
M20x2.5 [10.9] : 172kN M24x3.0 [10.9] : 247kN M30x3.5 [10.9] : 393kN TORQUE METHOD ACCORDING TO EN 1090-2 SHALL BE USED AS TIGHTENING PROCEDURE. FAYING SURFACES TO BE TREATED TO ACHIEVE A FRICTION COEFFICIENT OF 0,4 (μ=0,4)

FASTENING ELEMENTS			
ELEMENT	BOLTS	NUTS	WASHERS
TYPE	M20X2.5 [10.9] M24X3.0 [10.9] M30X3.5 [10.9]	M20X2.5 [10] M24X3.0 [10] M30X3.5 [10]	M20 C45E+T M24 C45E+T M30 C45E+T
CODE	EN14399-1/EN14399-4-HV / EN ISO 898-1	EN14399-1/EN14399-4-HV / EN ISO 898-2	EN14399-1/EN14399-6-HV / EN10083-1

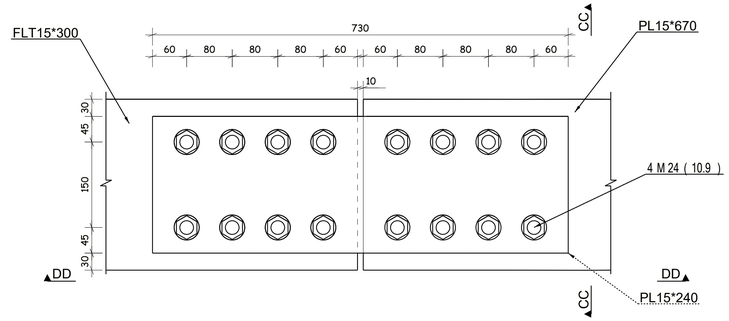

DETAIL 10
1:5

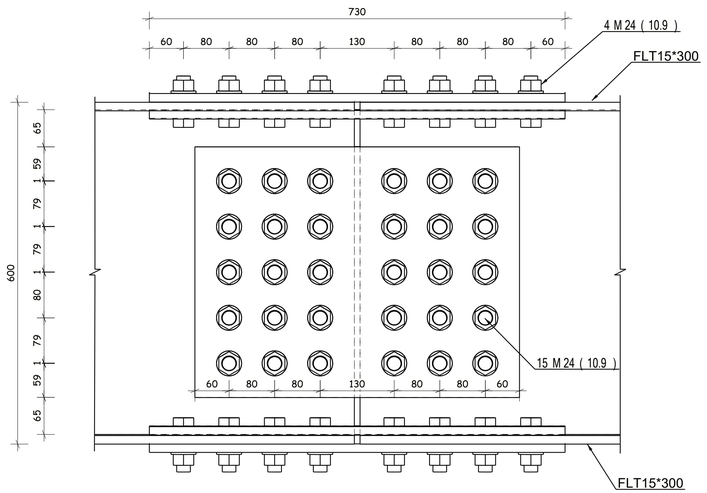

Sec (FF - FF)
1:5

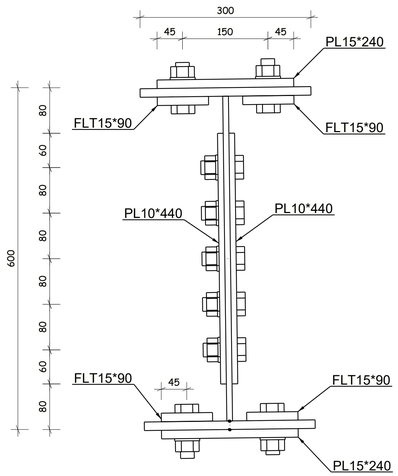

Sec (EE - EE)
1:5

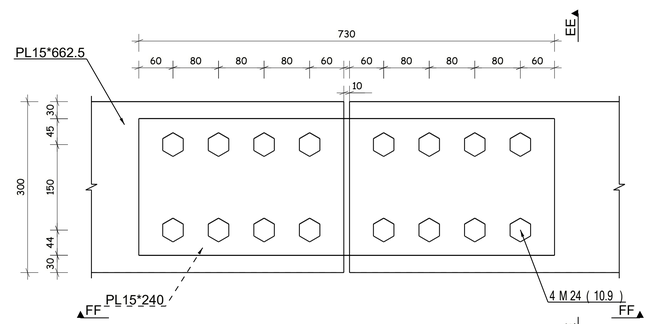

DETAIL 9
1:5

STRUCTURAL STEEL
- PLATES: t ≤ 40mm S355J2N [EN 10025 : 2018] t > 40mm S355K2N [EN 10025 : 2018] - SHAPES (UPN 200) S355J0N [EN 10025:2018]

SHEAR CONNECTOR
STUD Ø22 h=175mm S235J2G3+C450 ST37-3K DIN17100

FILLET WELDS
- UNLESS NOTED OTHERWISE, ALL FILLET WELDS SHALL BE CONTINUOUS. - FILLET WELDS SHALL BE MADE FROM BOTH SIDES (SYMMETRICAL BEADS). - EFFECTIVE THROAT THICKNESSES ARE DEFINED (THEY SHOULD BE MULTIPLIED BY 1.41 TO GET THE LEG LENGTHS).
GROOVE WELDS
- ALL GROOVE WELDS SHALL BE MADE COMPLETE JOINT PENETRATION (CJP). BUTT JOINTS SHALL BE MADE WITH RUN-OFF PLATES. RUN-OFF PLATES SHALL BE REMOVED AFTER WELDING, GROUNDING THE EDGE IN THE DIRECTION OF STRESSES. - STEEL TO BE PAINTED IN ACCORDANCE WITH PROJECT SPECIFICATIONS. (CORROSIVITY CATEGORY C4 DURABILITY VERY HIGH) - QUALITY CONTROL IN ACCORDANCE WITH PROJECT SPECIFICATIONS. (EXECUTION LEVEL EXC3 ACCORDING TO EN1090-2:2019)

SYMBOL	DESCRIPTION
e	FILLET WELD OF EFFECTIVE THROAT THICKNESS (e)mm.
e	FILLET WELD OF EFFECTIVE THROAT THICKNESS (e)mm, BOTH SIDES.
PP	PARTIAL PENETRATION WELD.
FP	COMPLETE JOINT PENETRATION.
	ALL ROUND WELD.
	FIELD WELD.
UT x%	ULTRASONIC TEST AT x%.

e=EFFECTIVE THROAT THICKNESS
l=LEG

6 October Monorail
Engineering Unit
Valid For Construction

GENERAL NOTES:

1. ALL DIMENSIONS ARE IN MILLIMETERS UNLESS OTHERWISE SPECIFIED.
2. LEVELS ARE IN METERS
3. DESIGN SERVICE LIFE OF 100 YEARS.
4. FLANGES OF TOP AND BOTTOM CHORDS TO BE SUPPLIED WITH IMPROVED THROUGH THICKNESS PROPERTIES Z25 ACCORDING TO EN10164.

REFERENCE DRAWINGS

1	93M-0407-SEN-6OL11-END-10118-B PAGE 01:17
2	
3	
4	
5	
6	
7	
8	
9	
10	
11	

6TH OF OCTOBER CITY RAIL TRANSIT MONORAIL &
NEW CAPITAL CITY RAIL TRANSIT MONORAIL

The Authority
Hill International
Authority Consultant

ORASCOM CONSTRUCTION
BOMBARDIER
Main Contractor

SENER
SHAKER CONSULTANCY GROUP
Designer

CONTRACTOR
CONSULTANT:

EHC
ENGINEERING HOUSE FOR CONSULTANCY

REV	DATE	BY	DESCRIPTION	CHK	APD
A	20-11-24	M.SH	ISSUE FOR APPROVAL	A.SH	M.M

SCALE: AS SHOWN
SHOPDRAWING
DATE: 20-11-2024

DRAWING TITLE:
6TH OF OCTOBER MONORAIL
SHOP DRAWING FOR BRIDGE 6OL11-37
STEEL TRUSS (I).
SPLICE.01

Project Code	Rubric	Initiator	Lot	Ref	Number	Revision
9 3	M 0 4 0 7	A C C	6 0 L 1 1	D W G	90010	A

Tekla structures

-Approval is subjected to the approval of coordination package between multi-discipline.

REVIEWED WITH COMMENT
MONORAILS PROJECT

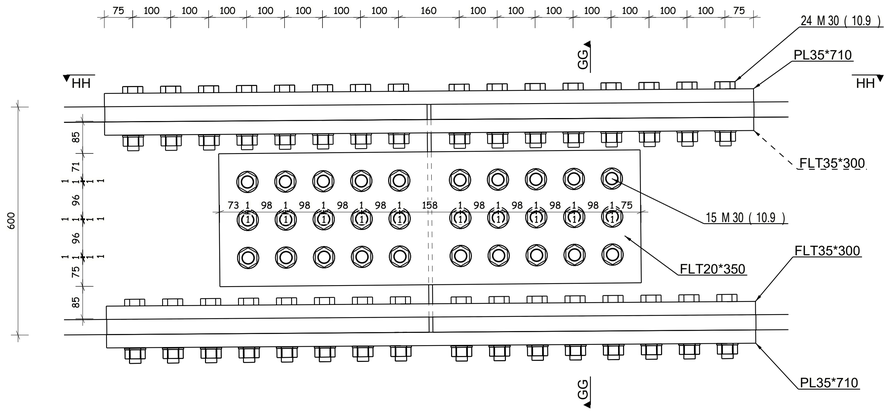

DETAIL 11
1:7.5

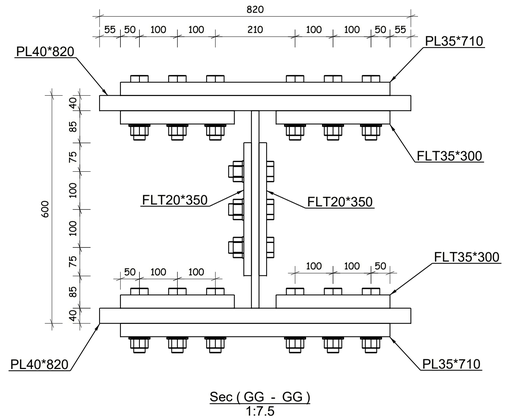

Sec (GG - GG)
1:7.5

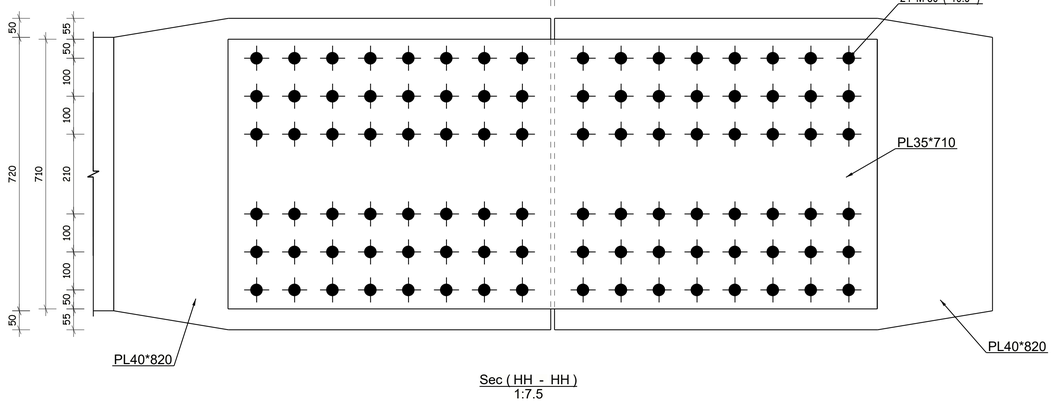

Sec (HH - HH)
1:7.5

STRUCTURAL STEEL
- PLATES: t ≤ 40mm S355J2N [EN 10025 : 2018] t > 40mm S355K2N [EN 10025 : 2018] - SHAPES (UPN 200) S355J0N [EN 10025:2018]

SHEAR CONNECTOR
STUD Ø22 h=175mm S235J2G3+C450 ST37-3K DIN17100

FILLET WELDS
- UNLESS NOTED OTHERWISE, ALL FILLET WELDS SHALL BE CONTINUOUS. - FILLET WELDS SHALL BE MADE FROM BOTH SIDES (SYMMETRICAL BEADS). - EFFECTIVE THROAT THICKNESSES ARE DEFINED (THEY SHOULD BE MULTIPLIED BY 1.41 TO GET THE LEG LENGTHS).
GROOVE WELDS
- ALL GROOVE WELDS SHALL BE MADE COMPLETE JOINT PENETRATION (CJP). BUTT JOINTS SHALL BE MADE WITH RUN-OFF PLATES. RUN-OFF PLATES SHALL BE REMOVED AFTER WELDING, GROUNDING THE EDGE IN THE DIRECTION OF STRESSES.
- STEEL TO BE PAINTED IN ACCORDANCE WITH PROJECT SPECIFICATIONS. (CORROSIVITY CATEGORY C4 DURABILITY VERY HIGH) - QUALITY CONTROL IN ACCORDANCE WITH PROJECT SPECIFICATIONS. (EXECUTION LEVEL EXC3 ACCORDING TO EN1090-2:2019)

SYMBOL	DESCRIPTION	
e	FILLET WELD OF EFFECTIVE THROAT THICKNESS (e)mm.	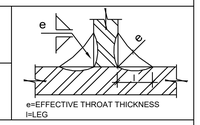
e	FILLET WELD OF EFFECTIVE THROAT THICKNESS (e)mm, BOTH SIDES.	
PP	PARTIAL PENETRATION WELD.	
CJP	COMPLETE JOINT PENETRATION.	
	ALL AROUND WELD.	
	FIELD WELD.	
UT x%	ULTRASONIC TEST AT x%.	

PRELOAD LOADS
M20x2.5 [10.9] : 172kN M24x3.0 [10.9] : 247kN M30x3.5 [10.9] : 394kN TORQUE METHOD ACCORDING TO EN 1090-2 SHALL BE USED FOR TIGHTENING PRELOADED BOLTS MAYING SURFACE TO BE TREATED TO ACHIEVE FRICTION COEFFICIENT OF 0.4 (μ=0.4)

FASTENING ELEMENTS			
ELEMENT	BOLTS	NUTS	WASHERS
TYPE	M20X2.5 [10.9] M24X3.0 [10.9] M30X3.5 [10.9]	M20X2.5 [10] M24X3.0 [10] M30X3.5 [10]	M20 C45E+T M24 C45E+T M30 C45E+T
CODE	EN14399-1/EN14399-4-HV / EN ISO 898-1	EN14399-1/EN14399-4-HV / EN ISO 898-2	EN14399-1/EN14399-6-HV / EN10083-1

6 October Monorail
Engineering Unit
Valid For Construction

GENERAL NOTES:

1. ALL DIMENSIONS ARE IN MILLIMETERS UNLESS OTHERWISE SPECIFIED.
2. LEVELS ARE IN METERS
3. DESIGN SERVICE LIFE OF 100 YEARS.
4. FLANGES OF TOP AND BOTTOM CHORDS TO BE SUPPLIED WITH IMPROVED THROUGH THICKNESS PROPERTIES Z25 ACCORDING TO EN10164.

REFERENCE DRAWINGS	
1	93M-0407-SEN-6OL11-END-10118-B PAGE 01:17
2	
3	
4	
5	
6	
7	
8	
9	
10	
11	

6TH OF OCTOBER CITY RAIL TRANSIT MONORAIL &
NEW CAPITAL CITY RAIL TRANSIT MONORAIL

The Authority
Hill International
Authority Consultant

ORASCOM CONSTRUCTION
Main Contractor

BOMBARDIER
SENER
SHAKER CONSULTANCY GROUP
Designer

CONTRACTOR
CONSULTANT:
EHC
ENGINEERING HOUSE FOR CONSULTANCY

SCALE	SHOP DRAWING	DATE
AS SHOWN		20-11-2024

REV	DATE	BY	DESCRIPTION	CHK	APD
A	20-11-24	M.SH	ISSUE FOR APPROVAL	A.SH	M.M

DRAWING TITLE:
6TH OF OCTOBER MONORAIL
SHOP DRAWING FOR BRIDGE 6OL11-37
STEEL TRUSS (I).
SPLICE.02

Project Code	Rubric	Initiator	Lot	Ref	Number	Revision
9 3 M	0 4 0 7	A C C	6 0 L 1 1	D W G	90011	A

Tekla structures

-Approval is subjected to the approval of coordination package between multi-discipline.

REVIEWED WITH COMMENT
MONORAILS PROJECT

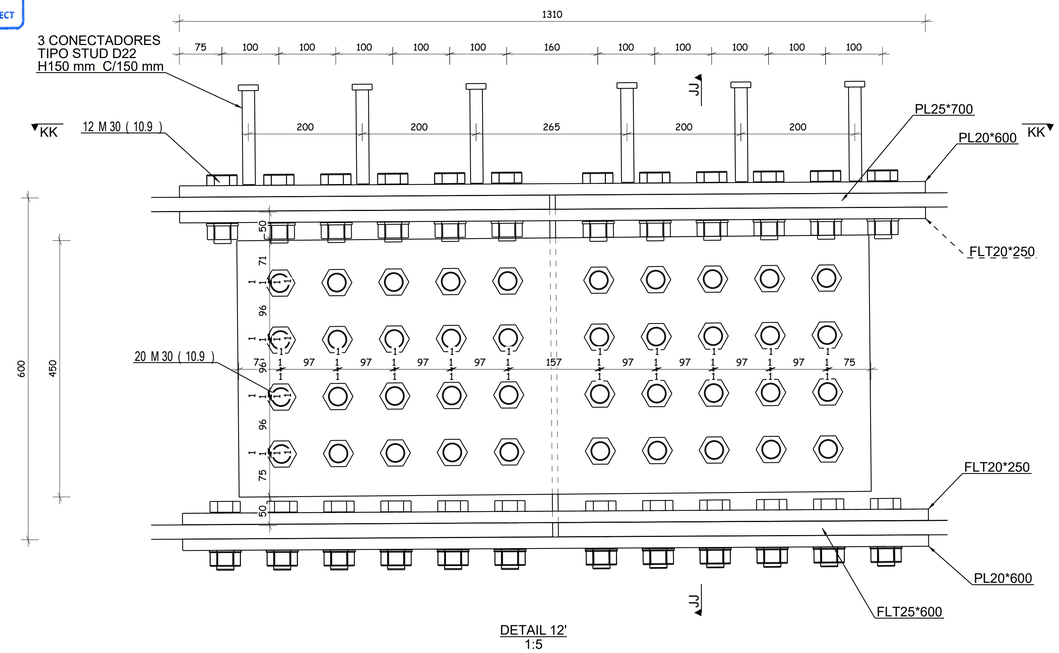

DETAIL 12'
1:5

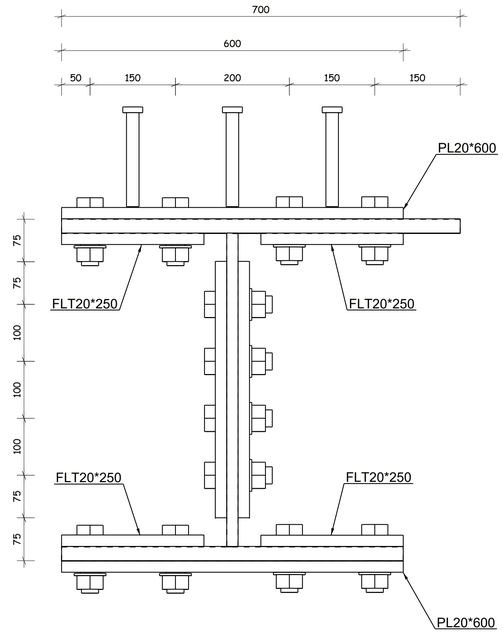

Sec (JJ - JJ)
1:5

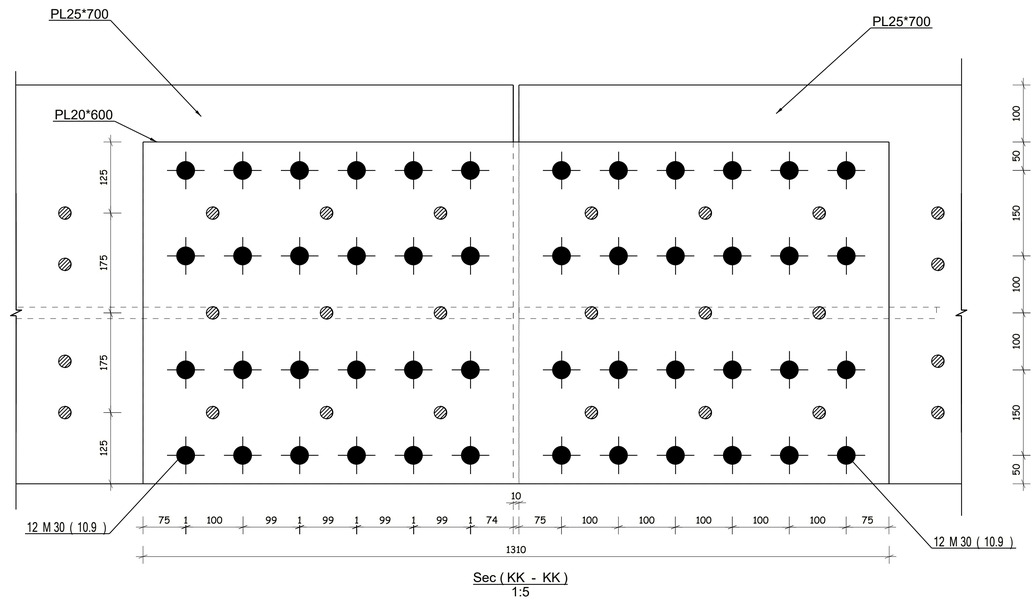

Sec (KK - KK)
1:5

STRUCTURAL STEEL
- PLATES: t≤ 40mm S355J2N [EN 10025 : 2018] t > 40mm S355K2N [EN 10025 : 2018] - SHAPES (UPN 200) S355J0N [EN 10025:2018]

SHEAR CONNECTOR
STUD Ø22 h=175mm S235J2G3+C450 ST37-3K DIN17100

FILLET WELDS
- UNLESS NOTED OTHERWISE, ALL FILLET WELDS SHALL BE CONTINUOUS. - FILLET WELDS SHALL BE MADE FROM BOTH SIDES (SYMMETRICAL BEADS). - EFFECTIVE THROAT THICKNESSES ARE DEFINED (THEY SHOULD BE MULTIPLIED BY 1.41 TO GET THE LEG LENGTHS).
GROOVE WELDS
- ALL GROOVE WELDS SHALL BE MADE COMPLETE JOINT PENETRATION (CJP). BUTT JOINTS SHALL BE MADE WITH RUN-OFF PLATES. RUN-OFF PLATES SHALL BE REMOVED AFTER WELDING, GROUNDING THE EDGE IN THE DIRECTION OF STRESSES.
- STEEL TO BE PAINTED IN ACCORDANCE WITH PROJECT SPECIFICATIONS. (CORROSIVITY CATEGORY C4 DURABILITY VERY HIGH) - QUALITY CONTROL IN ACCORDANCE WITH PROJECT SPECIFICATIONS. (EXECUTION LEVEL EXC3 ACCORDING TO EN1090-2:2019)

SYMBOL	DESCRIPTION
e	FILLET WELD OF EFFECTIVE THROAT THICKNESS (e)mm.
e e	FILLET WELD OF EFFECTIVE THROAT THICKNESS (e)mm, BOTH SIDES.
PP	PARTIAL PENETRATION WELD.
CJP	COMPLETE JOINT PENETRATION.
	ALL AROUND WELD.
	FIELD WELD.
UT x%	ULTRASONIC TEST AT x%.

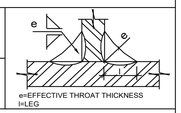

PRELOAD LOADS
M20X2.5 [10.9] : 172KN M24x3.0 [10.9] : 247KN M30x3.5 [10.9] : 393KN TORQUE SETTING ACCORDING TO EOTA-SHALLE TILLER'S GUIDE PROCEDURE.
FAYING SURFACES TO BE TREATED TO ACHIEVE A SLIP COEFFICIENT OF 0.5

FASTENING ELEMENTS			
ELEMENT	BOLTS	NUTS	WASHERS
TYPE	M20X2.5 [10.9] M24X3.0 [10.9] M30X3.5 [10.9]	M20X2.5 [10] M24X3.0 [10] M30X3.5 [10]	M20 C45E+T M24 C45E+T M30 C45E+T
CODE	EN14399-1/EN14399-4-HV / EN ISO 898-1	EN14399-1/EN14399-4-HV / EN ISO 898-2	EN14399-1/EN14399-6-HV / EN10083-1

6 October Monorail
Engineering Unit
Valid For Construction

GENERAL NOTES:

1. ALL DIMENSIONS ARE IN MILLIMETERS UNLESS OTHERWISE SPECIFIED.
2. LEVELS ARE IN METERS
3. DESIGN SERVICE LIFE OF 100 YEARS.
4. FLANGES OF TOP AND BOTTOM CHORDS TO BE SUPPLIED WITH IMPROVED THROUGH THICKNESS PROPERTIES Z25 ACCORDING TO EN10164.

REFERENCE DRAWINGS	
1	93M-0407-SEN-6OL11-END-10118-B PAGE 01:17
2	
3	
4	
5	
6	
7	
8	
9	
10	
11	

6TH OF OCTOBER CITY RAIL TRANSIT MONORAIL &
NEW CAPITAL CITY RAIL TRANSIT MONORAIL

The Authority
Hill International
Authority Consultant

Main Contractor

Designer

CONTRACTOR
CONSULTANT:

ENGINEERING HOUSE FOR CONSULTANCY

SCALE	SHOP DRAWING	DATE
AS SHOWN		20-11-2024

REV	DATE	BY	DESCRIPTION	CHK	APD
A	20-11-24	M.SH	ISSUE FOR APPROVAL	A.SH	M.M

DRAWING TITLE:
6TH OF OCTOBER MONORAIL
SHOP DRAWING FOR BRIDGE 6OL11-37
STEEL TRUSS (I).
SPLICE.03

Project Code	Rubric	Initiator	Lot	Ref	Number	Revision
9 3 M	0 4 0 7	A C C	6 0 L 1 1	D W G	90012	A

Tekla structures

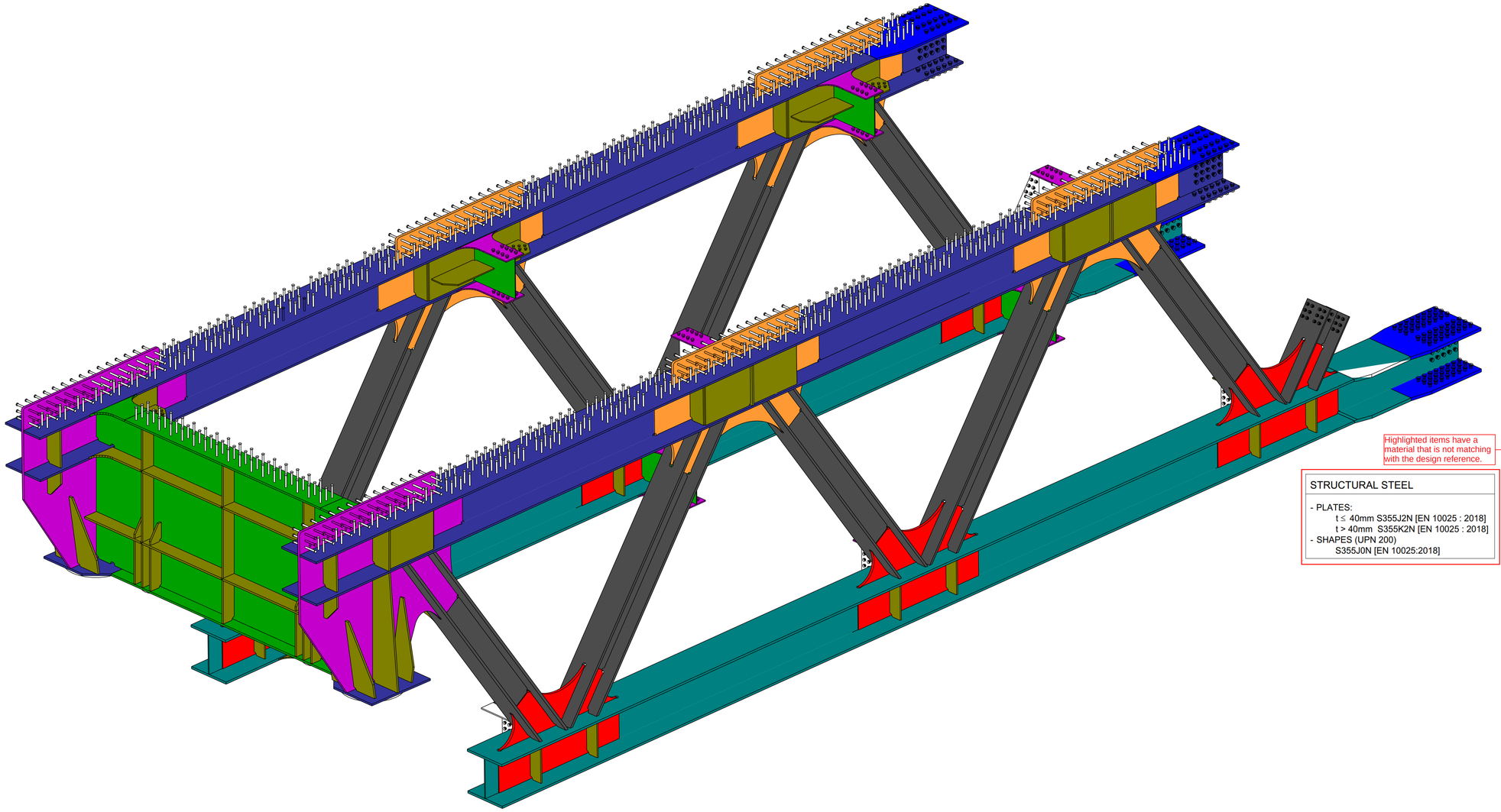

ISOMETRIC VIEW

ERECTION MARK :	TR1				QTY :	1	NOS
POS NO.	QTY PER ASSLY	SECTION	LENGTH	UNIT WEIGHT (Kg)	TOTAL QTY	TOTAL WEIGHT	GRADE
FP14	1	FLT20*400	4022	242	1	242.0	S355J2N
1001	2	PL25*400.0	800	35	2	70.0	S355J2N
1002	4	PL25*400.0	688	29	4	116.0	S355J2N
FL1	2	PL20*400.0	3000	188	2	376.0	S355J2N
FL2	4	PL20*700.0	800	47	4	188.0	S355J2N
FP6	2	PL30*600.0	14553	2002	2	4004.0	S355J2N
FP7	2	PL30*600.0	14551	2056	2	4112.0	S355J2N
FP8	2	PL30*400.0	4045	365	2	730.0	S355J2N
FP9	2	PL30*400.0	4044	365	2	730.0	S355J2N
FP10	2	PL20*400.0	1255	73	2	146.0	S355J2N
FP11	2	PL20*400.0	991	58	2	116.0	S355J2N
FP12	2	PL25*600.0	14279	1635	2	3270.0	S355J2N
FP13	2	PL25*600.0	15758	1794	2	3588.0	S355J2N
FP14	1	PL20*400.0	4022	242	1	242.0	S355J2N
FP15	2	PL20*400.0	4022	242	2	484.0	S355J2N
FP16	2	PL30*400.0	4026	363	2	726.0	S355J2N
FP17	2	PL30*400.0	4025	363	2	726.0	S355J2N
FP18	1	PL35*400.0	4023	418	1	418.0	S355J2N
FP19	1	PL35*400.0	4024	418	1	418.0	S355J2N
FP20	2	PL35*400.0	4051	426	2	852.0	S355J2N
FP21	2	PL35*400.0	4051	426	2	852.0	S355J2N
FP31	1	PL35*400.0	4023	418	1	418.0	S355J2N
FP32	1	PL35*400.0	4024	418	1	418.0	S355J2N
GP1	1	PL35*1615.0	2810	940	1	940.0	S355J2N
GP2	1	PL35*1615.0	2810	941	1	941.0	S355J2N
GP5	1	PL35*1615.0	2810	940	1	940.0	S355J2N
GP7	1	PL35*1615.0	2810	941	1	941.0	S355J2N
GP9	2	PL35*2485.0	2771	1518	2	3036.0	S355J2N
IS1	24	PL20*180.0	538	15	24	360.0	S355J2N
IS3	20	PL25*230.0	548	24	20	480.0	S355J2N
IS4	6	PL25*283.0	548	30	6	180.0	S355J2N
IS7	4	PL25*230.0	230	14	4	56.0	S355J2N
IS8	4	PL30*230.0	548	29	4	116.0	S355J2N
IS9	8	PL25*180.0	250	6	8	48.0	S355J2N
IS10	6	PL25*185.0	2146	77	6	462.0	S355J2N
IS11	8	PL25*180.0	600	21	8	168.0	S355J2N
S1	943	ROD22	175	1	943	943.0	S235J2G3
W1	2	PL40*720.0	906	199	2	398.0	S355J2N
W2	2	PL40*720.0	906	199	2	398.0	S355J2N
W3	2	PL15*224.0	540	14	2	28.0	S355J2N
W5	1	PL25*700.0	1483	197	1	197.0	S355J2N
W6	2	PL40*820.0	1154	292	2	584.0	S355J2N
W8	2	PL40*820.0	1152	292	2	584.0	S355J2N
W10	2	PL35*1210.0	2052	544	2	1088.0	S355J2N
W11	2	PL35*1210.0	2052	544	2	1088.0	S355J2N
W12	2	PL35*1209.0	2052	544	2	1088.0	S355J2N
W14	12	PL15*663.0	700	25	12	300.0	S355J2N
W16	1	PL25*700.0	1483	197	1	197.0	S355J2N
W18	8	PL20*548.0	766	66	8	528.0	S355J2N
W19	8	PL20*548.0	773	66	8	528.0	S355J2N
W23	3	PL15*343.0	735	28	3	84.0	S235
W24	2	PL15*343.0	735	28	2	56.0	S235
W26	8	PL25*350.0	1000	45	8	360.0	S355J2N
W27	2	PL25*915.0	1000	165	2	330.0	S355J2N
W28	2	PL60*800.0	800	0	2	0.0	S355-K2N
W29	2	PL25*432.0	1574	110	2	220.0	S355J2N
W30	4	PL20*548.0	778	66	4	264.0	S355J2N
W31	1	PL25*400.0	3870	304	1	304.0	S355J2N
W33	8	PL25*200.0	1375	54	8	432.0	S355J2N
W34	4	PL25*200.0	970	38	4	152.0	S355J2N
W35	1	PL25*400.0	3400	267	1	267.0	S355J2N
W36	1	PL25*2150.0	4765	2001	1	2001.0	S355J2N
W37	2	PL50*300.0	300	0	2	0.0	S355-K2N
W39	1	PL15*342.0	735	28	1	28.0	S235
W40	1	PL15*343.0	735	28	1	28.0	S235
W41	1	PL15*343.0	735	28	1	28.0	S235
W42	1	PL15*343.0	735	28	1	28.0	S235
W43	1	PL15*343.0	735	28	1	28.0	S235
WEB1	1	PL12*360.0	4765	160	1	160.0	S355J2N
WP2	2	PL20*520.0	2060	168	2	336.0	S355J2N
WP5	2	PL15*340.0	2603	104	2	208.0	S355J2N
WP6	2	PL12*360.0	2587	87	2	174.0	S355J2N
WP7	2	PL15*340.0	2581	103	2	206.0	S355J2N
WP8	2	PL15*330.0	2077	80	2	160.0	S355J2N
WP9	2	PL15*330.0	2607	101	2	202.0	S355J2N
WP10	2	PL15*540.0	4088	260	2	520.0	S355J2N
WP11	2	PL15*540.0	4085	260	2	520.0	S355J2N
WP12	2	PL12*360.0	454	15	2	30.0	S355J2N
WP14	2	PL20*550.0	763	66	2	132.0	S355J2N
WP15	2	PL20*550.0	3327	287	2	574.0	S355J2N
WP18	2	PL20*550.0	3281	283	2	566.0	S355J2N
XF7	8	PL15*670.0	697	26	8	208.0	S355J2N
XW2	6	PL10*570.0	945	41	6	246.0	S355J2N
XW5	4	PL10*550.0	953	41	4	164.0	S355J2N
				TOTAL WEIGHT :		48875.0	

Highlighted items have a material that is not matching with the design reference.

STRUCTURAL STEEL

- PLATES:
  - t ≤ 40mm S355J2N [EN 10025 : 2018]
  - t > 40mm S355K2N [EN 10025 : 2018]
- SHAPES (UPN 200)
  - S355J0N [EN 10025:2018]

REVIEWED WITH COMMENT MONORAILS PROJECT

6 October Monorail Engineering Unit Valid For Construction

GENERAL NOTES:

1. ALL DIMENSIONS ARE IN MILLIMETERS UNLESS OTHERWISE SPECIFIED.
2. LEVELS ARE IN METERS
3. DESIGN SERVICE LIFE OF 100 YEARS.
4. FLANGES OF TOP AND BOTTOM CHORDS TO BE SUPPLIED WITH IMPROVED THROUGH THICKNESS PROPERTIES Z25 ACCORDING TO EN10164.

REFERENCE DRAWINGS

1	93M-0407-SEN-6OL11-END-10118-B PAGE 01:17
2	
3	
4	
5	
6	
7	
8	
9	
10	
11	

6TH OF OCTOBER CITY RAIL TRANSIT MONORAIL & NEW CAPITAL CITY RAIL TRANSIT MONORAIL

The Authority — Hill International Authority Consultant

Main Contractor

Designer

CONTRACTOR
CONSULTANT

ENGINEERING HOUSE FOR CONSULTANCY

SCALE: AS SHOWN | SHOP DRAWING | DATE: 20.11.2024

REV	DATE	BY	DESCRIPTION	CHK	APD
A	20-11-24	M.SH	ISSUE FOR APPROVAL	A.SH	M.M

DRAWING TITLE:
6TH OF OCTOBER MONORAIL
SHOP DRAWING FOR BRIDGE 6OL11-37
STEEL TRUSS (I).
TR1.1

Project Code	Rubric	Initator	Lot	Ref	Number	Revision
93M	0407	ACC	60L11	DWG	90013	A

-Drawing shall be updated according to the comments on the GA drawing.
-Approval is subjected to the approval of coordination package between multi-discipline.

REVIEWED WITH COMMENT
MONORAILS PROJECT

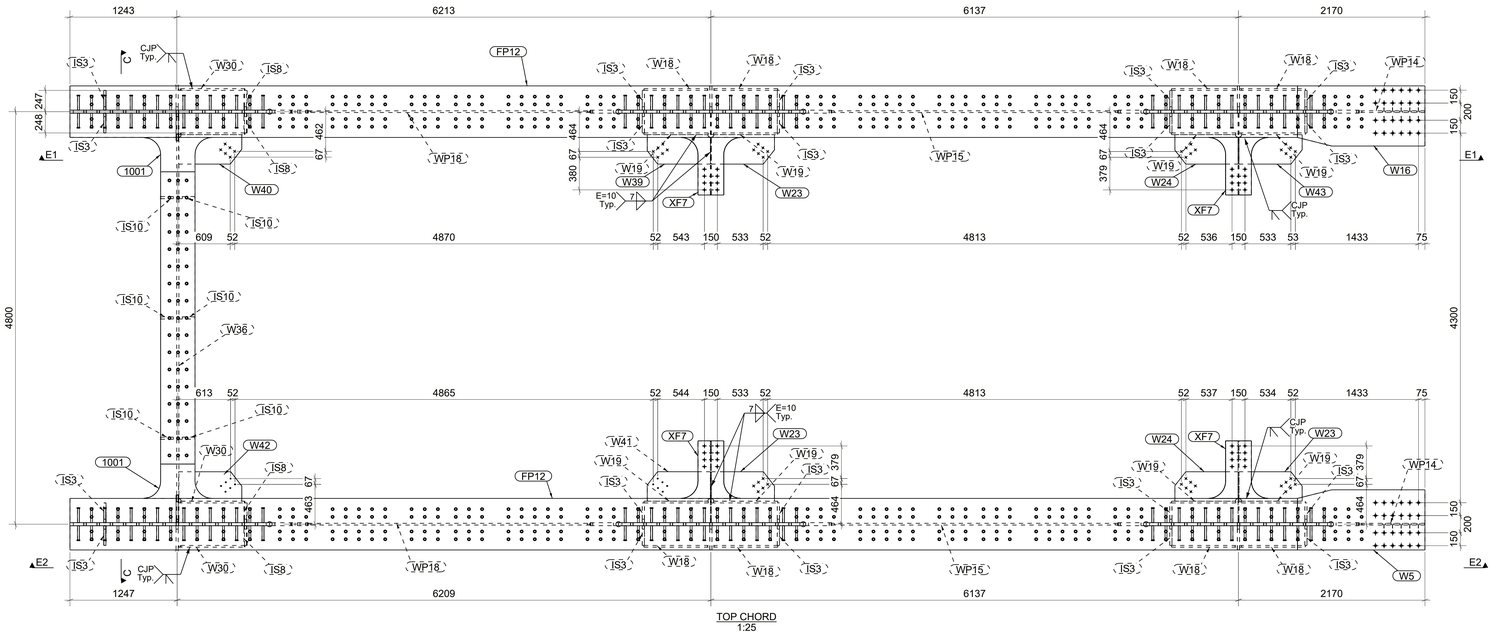

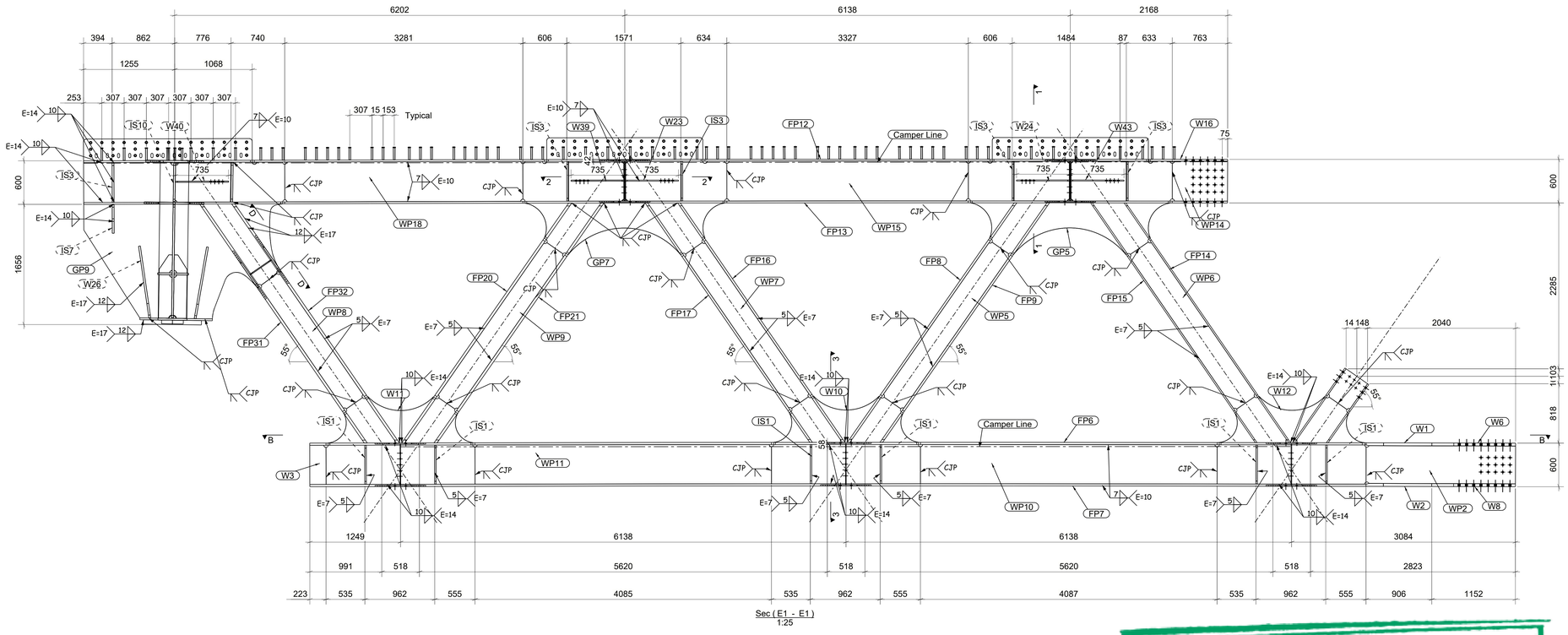

Sec (E1 - E1)
1:25

GENERAL NOTES:

1. ALL DIMENSIONS ARE IN MILLIMETERS UNLESS OTHERWISE SPECIFIED.
2. LEVELS ARE IN METERS
3. DESIGN SERVICE LIFE OF 100 YEARS.
4. FLANGES OF TOP AND BOTTOM CHORDS TO BE SUPPLIED WITH IMPROVED THROUGH THICKNESS PROPERTIES Z25 ACCORDING TO EN10164.

REFERENCE DRAWINGS

1	93M-0407-SEN-6OL11-END-10118-B PAGE 01:17
2	
3	
4	
5	
6	
7	
8	
9	
10	
11	

6TH OF OCTOBER CITY RAIL TRANSIT MONORAIL &
NEW CAPITAL CITY RAIL TRANSIT MONORAIL

The Authority
Hill International
Authority Consultant

Main Contractor

Designer

6 October Monorail Engineering Unit
Valid For Construction

CONTRACTOR
CONSULTANT

ENGINEERING HOUSE FOR CONSULTANCY

SCALE: AS SHOWN | SHOP DRAWING | DATE: 20.11.2024

REV	DATE	BY	DESCRIPTION	CHK	APD
A	20-11-24	M.SH	ISSUE FOR APPROVAL	A.SH	M.M

DRAWING TITLE:
6TH OF OCTOBER MONORAIL
SHOP DRAWING FOR BRIDGE 6OL11-37
STEEL TRUSS (I).
TR1.2

Project Code	Rubric	Initiator	Lot	Ref	Number	Revision
9 3 M	0 4 0 7	A C C	6 0 L 1 1	D W G	90014	A

-Drawing shall be updated according to the comments on the GA drawing.
-Approval is subjected to the approval of coordination package between multi-discipline.

REVIEWED WITH COMMENT
MONORAILS PROJECT

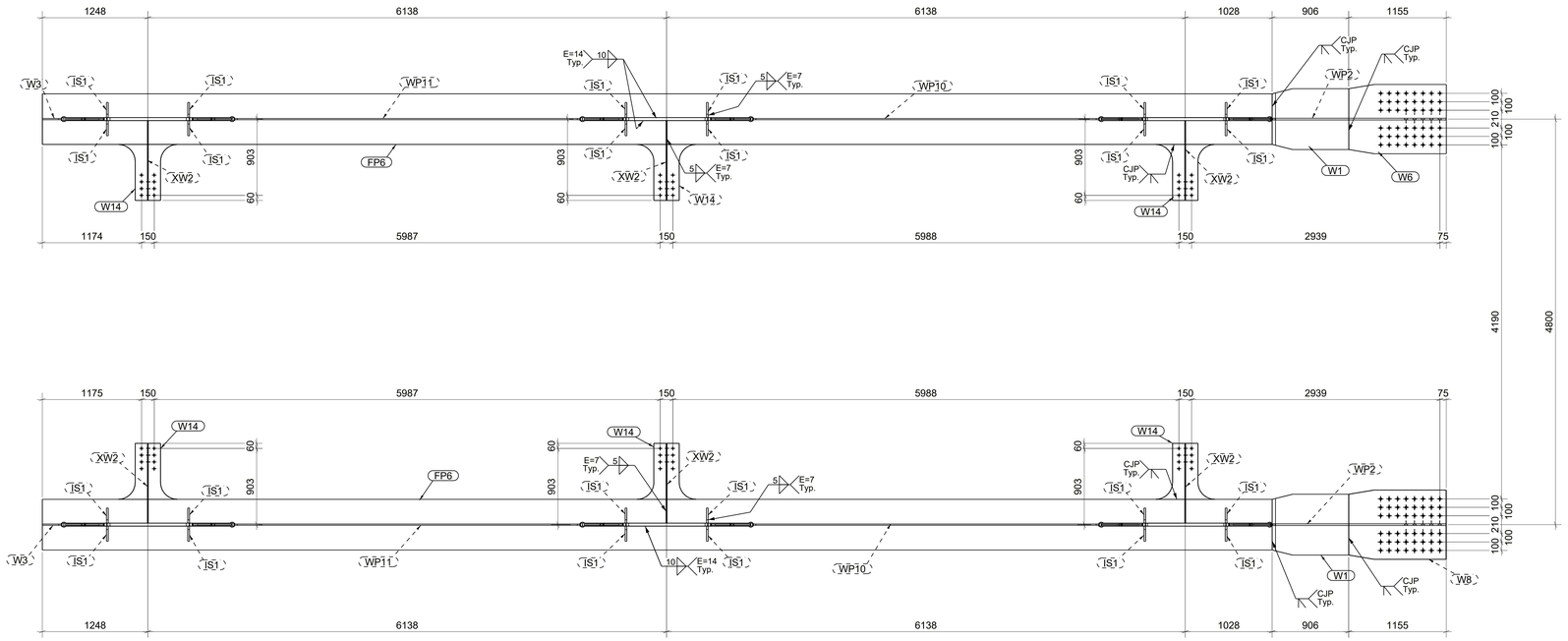

Sec (B - B)
1:25

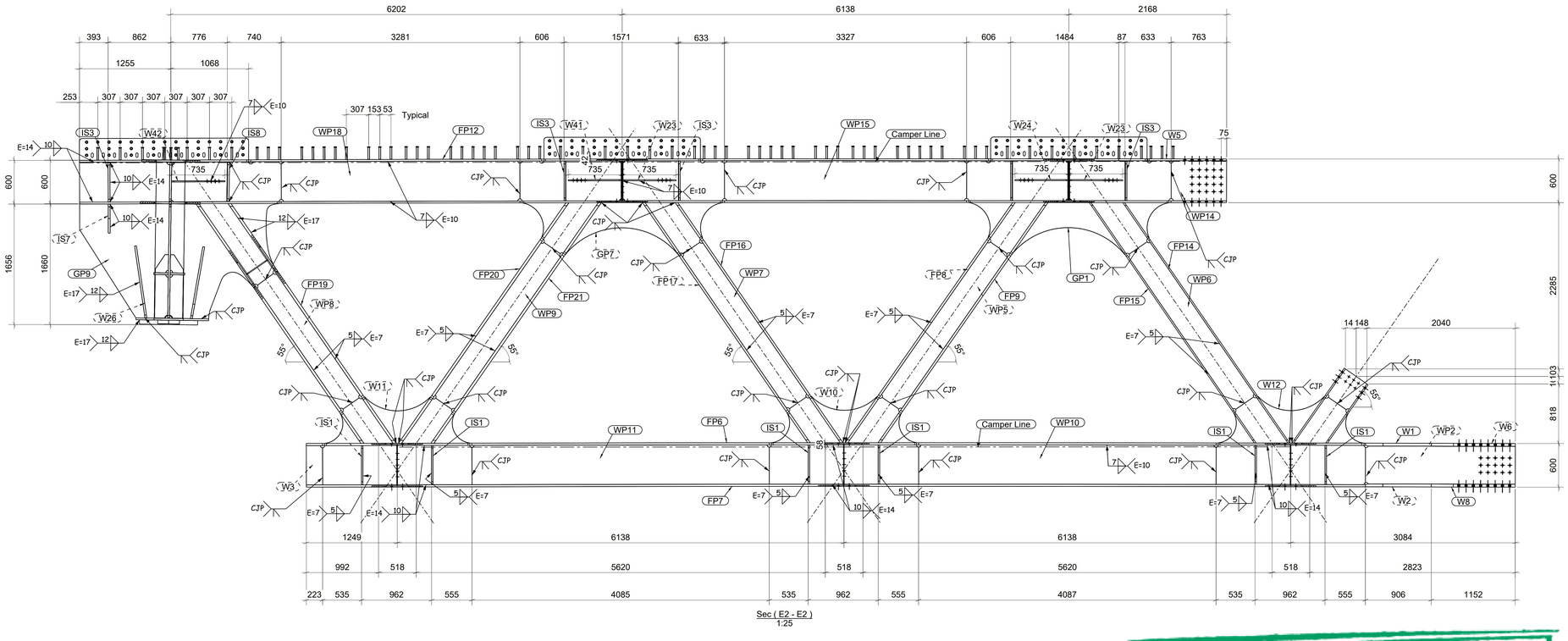

Sec (E2 - E2)
1:25

GENERAL NOTES:

1. ALL DIMENSIONS ARE IN MILLIMETERS UNLESS OTHERWISE SPECIFIED.
2. LEVELS ARE IN METERS
3. DESIGN SERVICE LIFE OF 100 YEARS.
4. FLANGES OF TOP AND BOTTOM CHORDS TO BE SUPPLIED WITH IMPROVED THROUGH THICKNESS PROPERTIES Z25 ACCORDING TO EN10164.

REFERENCE DRAWINGS

1	93M-0407-SEN-6OL11-END-10118-B PAGE 01:17
2	
3	
4	
5	
6	
7	
8	
9	
10	
11	

6TH OF OCTOBER CITY RAIL TRANSIT MONORAIL &
NEW CAPITAL CITY RAIL TRANSIT MONORAIL

The Authority
Hill International
Authority Consultant

Main Contractor

Designer

6 October Monorail Engineering Unit
Valid For Construction

CONTRACTOR
CONSULTANT

ENGINEERING HOUSE FOR CONSULTANCY

SCALE: AS SHOWN | SHOP DRAWING | DATE: 20.11.2024

REV	DATE	BY	DESCRIPTION	CHK	APD
A	20-11-24	M.SH	ISSUE FOR APPROVAL	A.SH	M.M

DRAWING TITLE:
6TH OF OCTOBER MONORAIL
SHOP DRAWING FOR BRIDGE 6OL11-37
STEEL TRUSS (I).
TR1.3

Project Code	Rubric	Initiator	Lot	Ref	Number	Revision
9 3 M	0 4 0 7	A C C	6 0 L 1 1	D W G	90015	A

-Drawing shall be updated according to the comments on the GA drawing.
-Approval is subjected to the approval of coordination package between multi-discipline.

REVIEWED WITH COMMENT
MONORAILS PROJECT

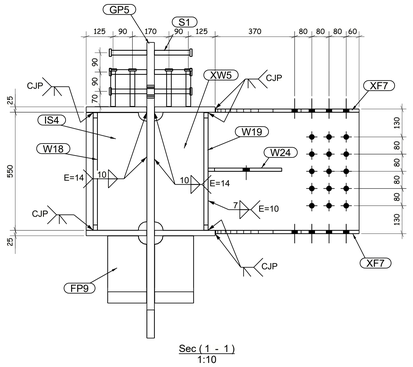

Sec (1 - 1)
1:10

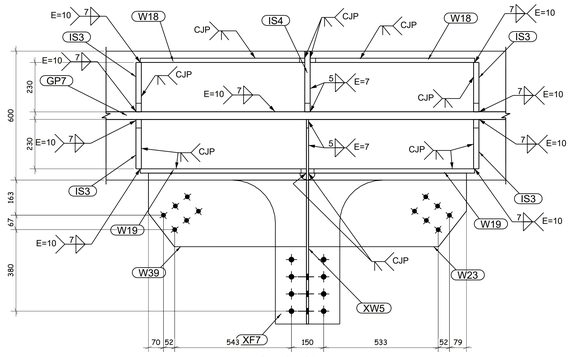

Sec (2 - 2)
1:10

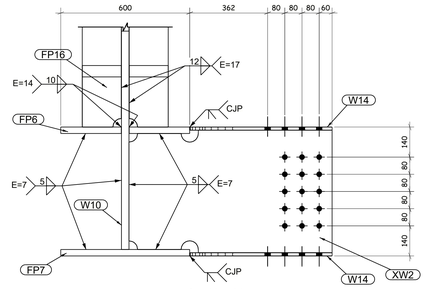

Sec (3 - 3)
1:10

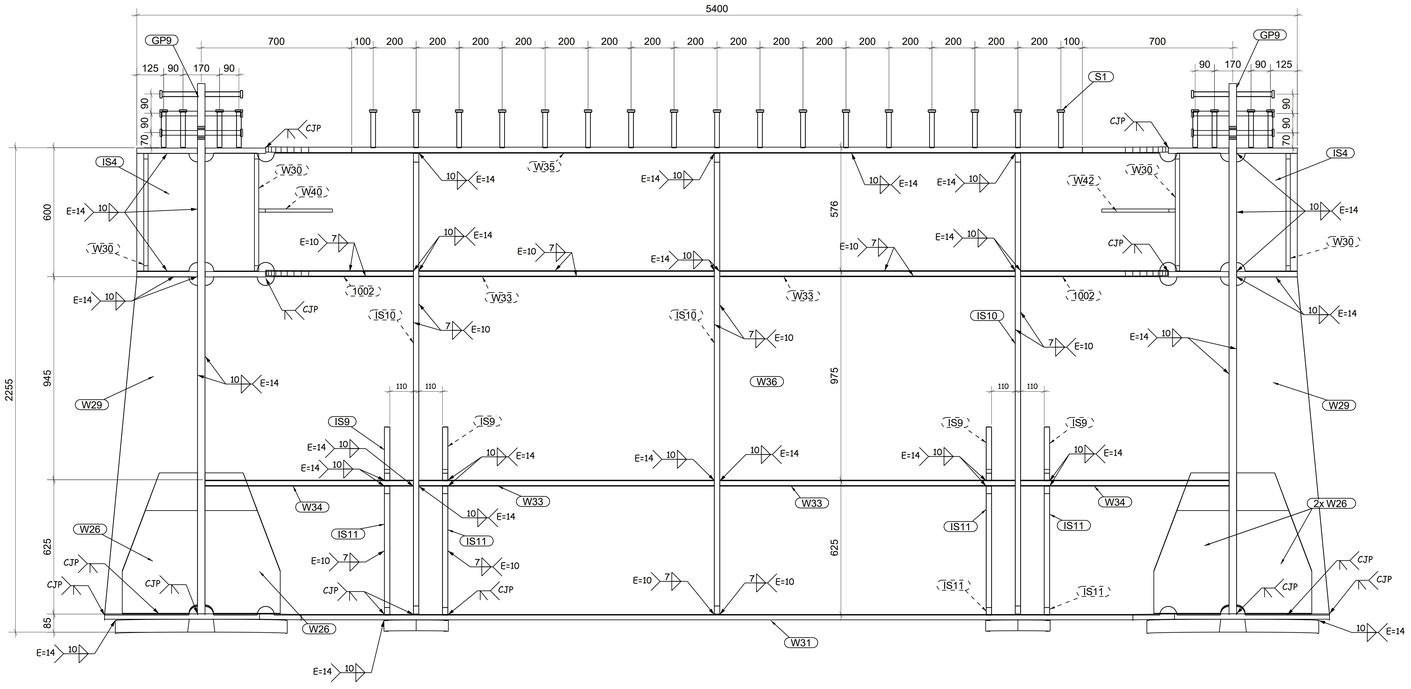

Sec (C - C)
1:10

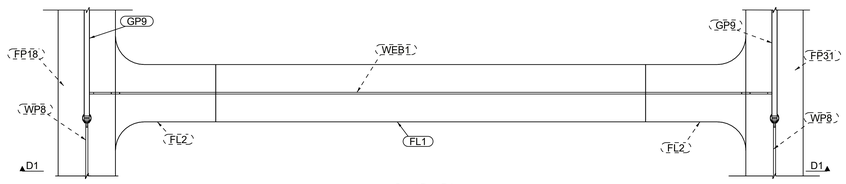

Sec (D - D)
1:15

Sec (D1 - D1)
1:15

GENERAL NOTES:

1. ALL DIMENSIONS ARE IN MILLIMETERS UNLESS OTHERWISE SPECIFIED.
2. LEVELS ARE IN METERS
3. DESIGN SERVICE LIFE OF 100 YEARS.
4. FLANGES OF TOP AND BOTTOM CHORDS TO BE SUPPLIED WITH IMPROVED THROUGH THICKNESS PROPERTIES Z25 ACCORDING TO EN10164.

REFERENCE DRAWINGS

1	93M-0407-SEN-6OL11-END-10118-B PAGE 01:17
2	
3	
4	
5	
6	
7	
8	
9	
10	
11	

6TH OF OCTOBER CITY RAIL TRANSIT MONORAIL &
NEW CAPITAL CITY RAIL TRANSIT MONORAIL

The Authority — Hill International Authority Consultant

Main Contractor: ORASCOM CONSTRUCTION / BOMBARDIER

Designer: SENER / SHAKER CONSULTING GROUP

6 October Monorail
Engineering Unit
Valid For Construction

CONTRACTOR
CONSULTANT

ENGINEERING HOUSE FOR CONSULTANCY

SCALE	SHOP DRAWING	DATE
AS SHOWN		20.11.2024

REV	DATE	BY	DESCRIPTION	CHK	APD
A	20-11-24	M.SH	ISSUE FOR APPROVAL	A.SH	M.M

DRAWING TITLE:
6TH OF OCTOBER MONORAIL
SHOP DRAWING FOR BRIDGE 6OL11-37
STEEL TRUSS (I).
TR1.4

Project Code	Rubric	Initiator	Lot	Ref	Number	Revision
9 3 M	0 4 0 7	A C C	6 0 L 1 1	D W G	90016	A

Fabricators

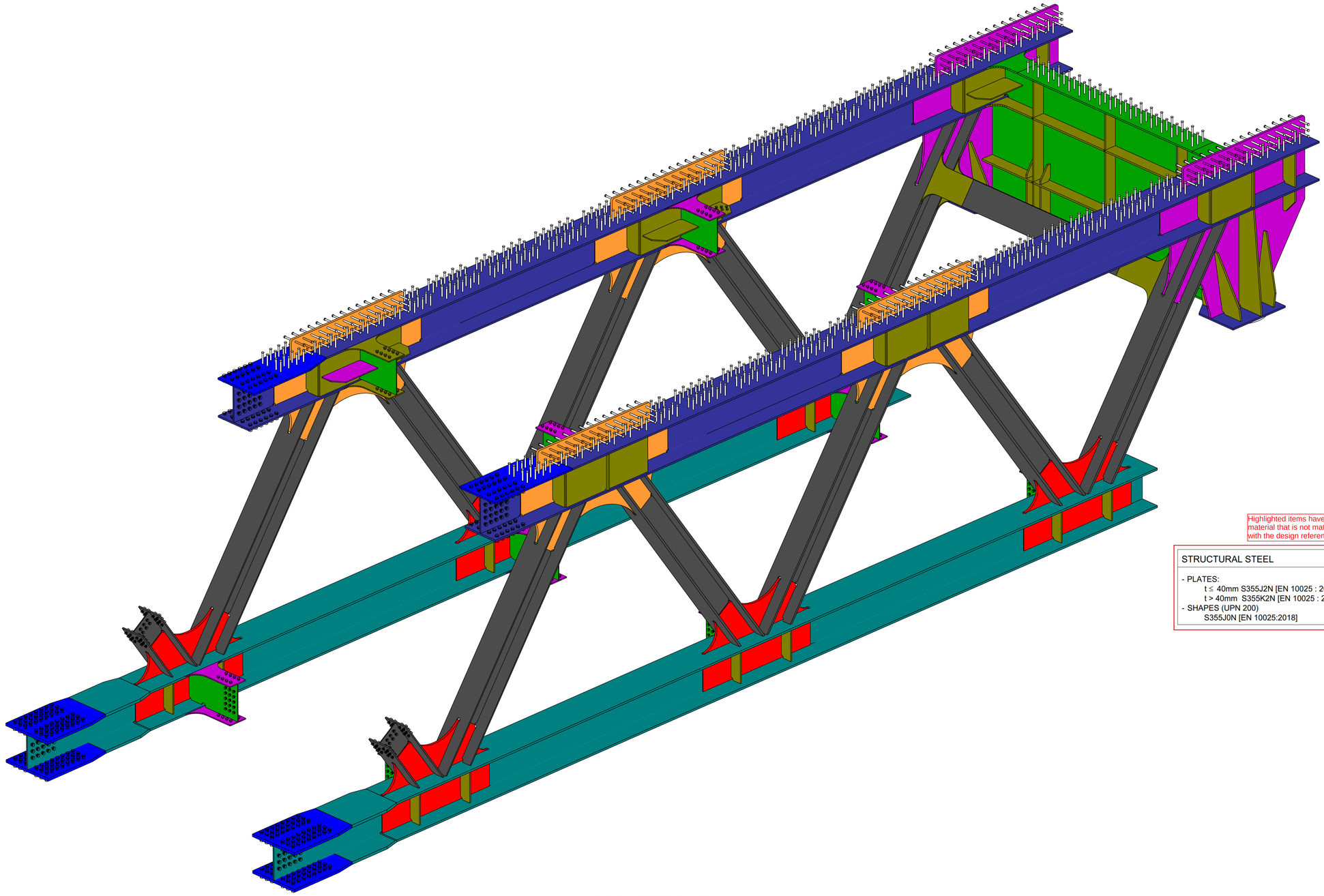

ISOMETRIC VIEW

ERECTION MARK :	TR2				QTY :	1	NOS
POS NO.	QTY PER ASSLY	SECTION	LENGTH	UNIT WEIGHT (Kg)	TOTAL QTY	TOTAL WEIGHT	GRADE
FP14	1	FLT20*400	4022	242	1	242.0	S355J2N
1001	2	PL25*400.0	800	35	2	70.0	S355J2N
1002	4	PL25*400.0	688	29	4	116.0	S355J2N
FL1	2	PL20*400.0	3000	188	2	376.0	S355J2N
FL2	4	PL20*700.0	800	47	4	188.0	S355J2N
FP6	2	PL30*600.0	14553	2002	2	4004.0	S355J2N
FP7	2	PL30*600.0	14551	2056	2	4112.0	S355J2N
FP8	2	PL30*400.0	4045	365	2	730.0	S355J2N
FP9	2	PL30*400.0	4044	365	2	730.0	S355J2N
FP10	2	PL20*400.0	1255	73	2	146.0	S355J2N
FP11	2	PL20*400.0	991	58	2	116.0	S355J2N
FP14	1	PL20*400.0	4022	242	1	242.0	S355J2N
FP15	2	PL20*400.0	4022	242	2	484.0	S355J2N
FP16	2	PL30*400.0	4026	363	2	726.0	S355J2N
FP17	2	PL30*400.0	4025	363	2	726.0	S355J2N
FP18	1	PL35*400.0	4023	418	1	418.0	S355J2N
FP19	1	PL35*400.0	4024	418	1	418.0	S355J2N
FP20	2	PL35*400.0	4051	426	2	852.0	S355J2N
FP21	2	PL35*400.0	4051	426	2	852.0	S355J2N
FP29	2	PL25*600.0	14279	1635	2	3270.0	S355J2N
FP30	2	PL25*600.0	15758	1794	2	3588.0	S355J2N
FP31	1	PL35*400.0	4023	418	1	418.0	S355J2N
FP32	1	PL35*400.0	4024	418	1	418.0	S355J2N
GP1	1	PL35*1615.0	2810	940	1	940.0	S355J2N
GP5	1	PL35*1615.0	2810	940	1	940.0	S355J2N
GP6	1	PL35*1615.0	2810	941	1	941.0	S355J2N
GP8	1	PL35*1615.0	2810	941	1	941.0	S355J2N
GP10	2	PL35*2476.0	2771	1519	2	3038.0	S355J2N
IS1	24	PL20*180.0	538	15	24	360.0	S355J2N
IS3	20	PL25*230.0	548	24	20	480.0	S355J2N
IS4	6	PL25*283.0	548	30	6	180.0	S355J2N
IS7	4	PL25*230.0	230	14	4	56.0	S355J2N
IS8	4	PL30*230.0	548	29	4	116.0	S355J2N
IS9	8	PL25*180.0	250	6	8	48.0	S355J2N
IS10	6	PL25*185.0	2146	77	6	462.0	S355J2N
IS11	8	PL25*180.0	600	21	8	168.0	S355J2N
S1	943	ROD22	175	1	943	943.0	S235J2G3
W1	2	PL40*720.0	906	199	2	398.0	S355J2N
W2	2	PL40*720.0	906	199	2	398.0	S355J2N
W3	2	PL15*224.0	540	14	2	28.0	S355J2N
W5	1	PL25*700.0	1483	197	1	197.0	S355J2N
W6	2	PL40*820.0	1154	292	2	584.0	S355J2N
W8	2	PL40*820.0	1152	292	2	584.0	S355J2N
W10	2	PL35*1210.0	2052	544	2	1088.0	S355J2N
W11	2	PL35*1210.0	2052	544	2	1088.0	S355J2N
W12	2	PL35*1209.0	2052	544	2	1088.0	S355J2N
W14	12	PL15*663.0	700	25	12	300.0	S355J2N
W16	1	PL25*700.0	1483	197	1	197.0	S355J2N
W18	8	PL20*548.0	766	66	8	528.0	S355J2N
W19	8	PL20*548.0	773	66	8	528.0	S355J2N
W23	3	PL15*343.0	735	28	3	84.0	S235
W24	2	PL15*343.0	735	28	2	56.0	S235
W26	8	PL25*350.0	1000	45	8	360.0	S355J2N
W27	2	PL25*915.0	1000	165	2	330.0	S355J2N
W28	2	PL60*800.0	800	0	2	0.0	S355-K2N
W29	2	PL25*432.0	1574	110	2	220.0	S355J2N
W31	1	PL25*400.0	3870	304	1	304.0	S355J2N
W32	4	PL20*548.0	768	66	4	264.0	S355J2N
W33	8	PL25*200.0	1375	54	8	432.0	S355J2N
W34	4	PL25*200.0	970	38	4	152.0	S355J2N
W35	1	PL25*400.0	3400	267	1	267.0	S355J2N
W36	1	PL25*2150.0	4765	2001	1	2001.0	S355J2N
W37	2	PL50*300.0	300	0	2	0.0	S355-K2N
W39	1	PL15*343.0	735	28	1	28.0	S235
W40	1	PL15*343.0	735	28	1	28.0	S235
W41	1	PL15*343.0	735	28	1	28.0	S235
W42	1	PL15*343.0	735	28	1	28.0	S235
W43	1	PL15*343.0	735	28	1	28.0	S235
WEB1	1	PL12*360.0	4765	160	1	160.0	S355J2N
WP2	2	PL20*520.0	2060	168	2	336.0	S355J2N
WP5	2	PL15*340.0	2603	104	2	208.0	S355J2N
WP6	2	PL12*360.0	2587	87	2	174.0	S355J2N
WP7	2	PL15*340.0	2581	103	2	206.0	S355J2N
WP8	2	PL15*330.0	2077	80	2	160.0	S355J2N
WP9	2	PL15*330.0	2607	101	2	202.0	S355J2N
WP10	2	PL15*540.0	4088	260	2	520.0	S355J2N
WP11	2	PL15*540.0	4085	260	2	520.0	S355J2N
WP12	2	PL12*360.0	454	15	2	30.0	S355J2N
WP14	2	PL20*550.0	763	66	2	132.0	S355J2N
WP15	2	PL20*550.0	3327	287	2	574.0	S355J2N
WP18	2	PL20*550.0	3281	283	2	566.0	S355J2N
XF7	8	PL15*670.0	697	26	8	208.0	S355J2N
XW2	6	PL10*570.0	945	41	6	246.0	S355J2N
XW5	4	PL10*550.0	953	41	4	164.0	S355J2N
				TOTAL WEIGHT :		48877.0	

Highlighted items have a material that is not matching with the design reference.

STRUCTURAL STEEL

- PLATES:
  - t ≤ 40mm S355J2N [EN 10025 : 2018]
  - t > 40mm S355K2N [EN 10025 : 2018]
- SHAPES (UPN 200)
  - S355J0N [EN 10025:2018]

REVIEWED WITH COMMENT MONORAILS PROJECT

6 October Monorail Engineering Unit Valid For Construction

GENERAL NOTES:

1. ALL DIMENSIONS ARE IN MILLIMETERS UNLESS OTHERWISE SPECIFIED.
2. LEVELS ARE IN METERS
3. DESIGN SERVICE LIFE OF 100 YEARS.
4. FLANGES OF TOP AND BOTTOM CHORDS TO BE SUPPLIED WITH IMPROVED THROUGH THICKNESS PROPERTIES Z25 ACCORDING TO EN10164.

REFERENCE DRAWINGS

1	93M-0407-SEN-6OL11-END-10118-B PAGE 01:17
2	
3	
4	
5	
6	
7	
8	
9	
10	
11	

6TH OF OCTOBER CITY RAIL TRANSIT MONORAIL & NEW CAPITAL CITY RAIL TRANSIT MONORAIL

The Authority — Hill International Authority Consultant — Main Contractor — Designer

CONTRACTOR
CONSULTANT
ENGINEERING HOUSE FOR CONSULTANCY

SCALE: AS SHOWN | SHOP DRAWING | DATE: 20.11.2024

REV	DATE	BY	DESCRIPTION	CHK	APD
A	20-11-24	M.SH	ISSUE FOR APPROVAL	A.SH	M.M

DRAWING TITLE:
6TH OF OCTOBER MONORAIL
SHOP DRAWING FOR BRIDGE 6OL11-37
STEEL TRUSS (I).
TR2.1

Project Code	Rubric	Initiator	Lot	Ref	Number	Revision
9 3 M	0 4 0 7	A C C	6 0 L 1 1	D W G	90017	A

-Drawing shall be updated according to the comments on the GA drawing.
-Approval is subjected to the approval of coordination package between multi-discipline.

REVIEWED WITH COMMENT
MONORAILS PROJECT

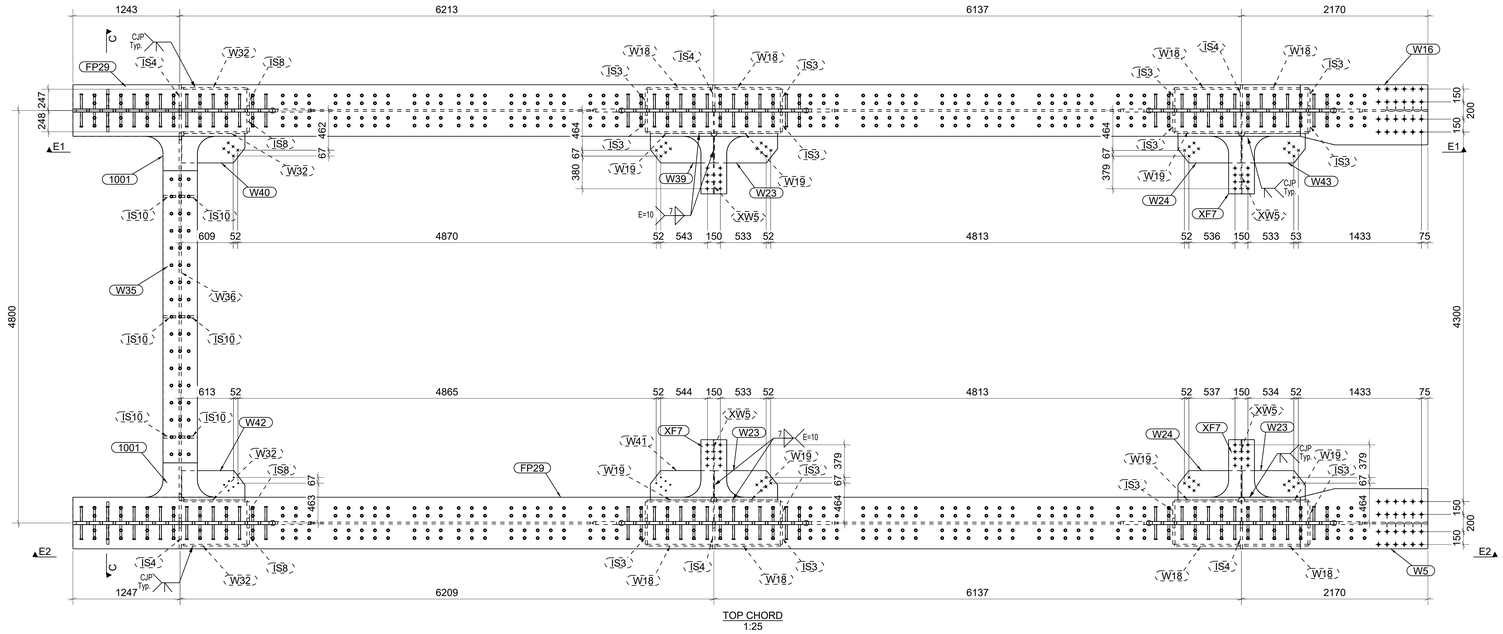

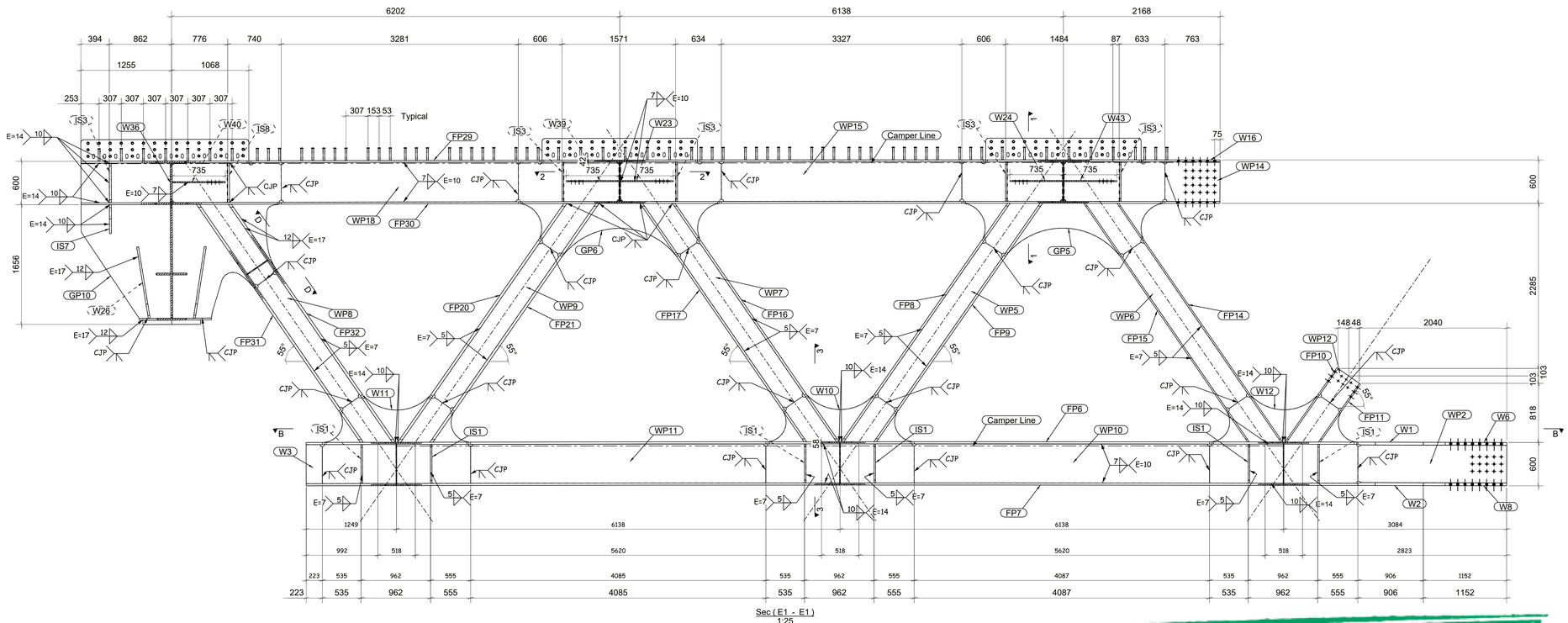

GENERAL NOTES:

1. ALL DIMENSIONS ARE IN MILLIMETERS UNLESS OTHERWISE SPECIFIED.
2. LEVELS ARE IN METERS
3. DESIGN SERVICE LIFE OF 100 YEARS.
4. FLANGES OF TOP AND BOTTOM CHORDS TO BE SUPPLIED WITH IMPROVED THROUGH THICKNESS PROPERTIES Z25 ACCORDING TO EN10164.

REFERENCE DRAWINGS

1	93M-0407-SEN-6OL11-END-10118-B PAGE 01:17
2	
3	
4	
5	
6	
7	
8	
9	
10	
11	

6TH OF OCTOBER CITY RAIL TRANSIT MONORAIL &
NEW CAPITAL CITY RAIL TRANSIT MONORAIL

The Authority
Hill International
Authority Consultant

ORASCOM CONSTRUCTION
BOMBARDIER
Main Contractor

SENER
SHAKER CONSULTANCY GROUP
Designer

6 October Monorail
Engineering Unit
Valid For Construction

CONTRACTOR
CONSULTANT

ENGINEERING HOUSE FOR CONSULTANCY

SCALE		SHOP DRAWING	DATE
AS SHOWN			20.11.2024

REV	DATE	BY	DESCRIPTION	CHK	APD
A	20-11-24	M.SH	ISSUE FOR APPROVAL	A.SH	M.M

DRAWING TITLE:
6TH OF OCTOBER MONORAIL
SHOP DRAWING FOR BRIDGE 6OL11-37
STEEL TRUSS (I).
TR2.2

Project Code	Rubric	Initiator	Lot	Ref	Number	Revision
93M	0407	ACC	6OL11	DWG	90018	A

-Drawing shall be updated according to the comments on the GA drawing.
-Approval is subjected to the approval of coordination package between multi-discipline.

REVIEWED WITH COMMENT
MONORAILS PROJECT

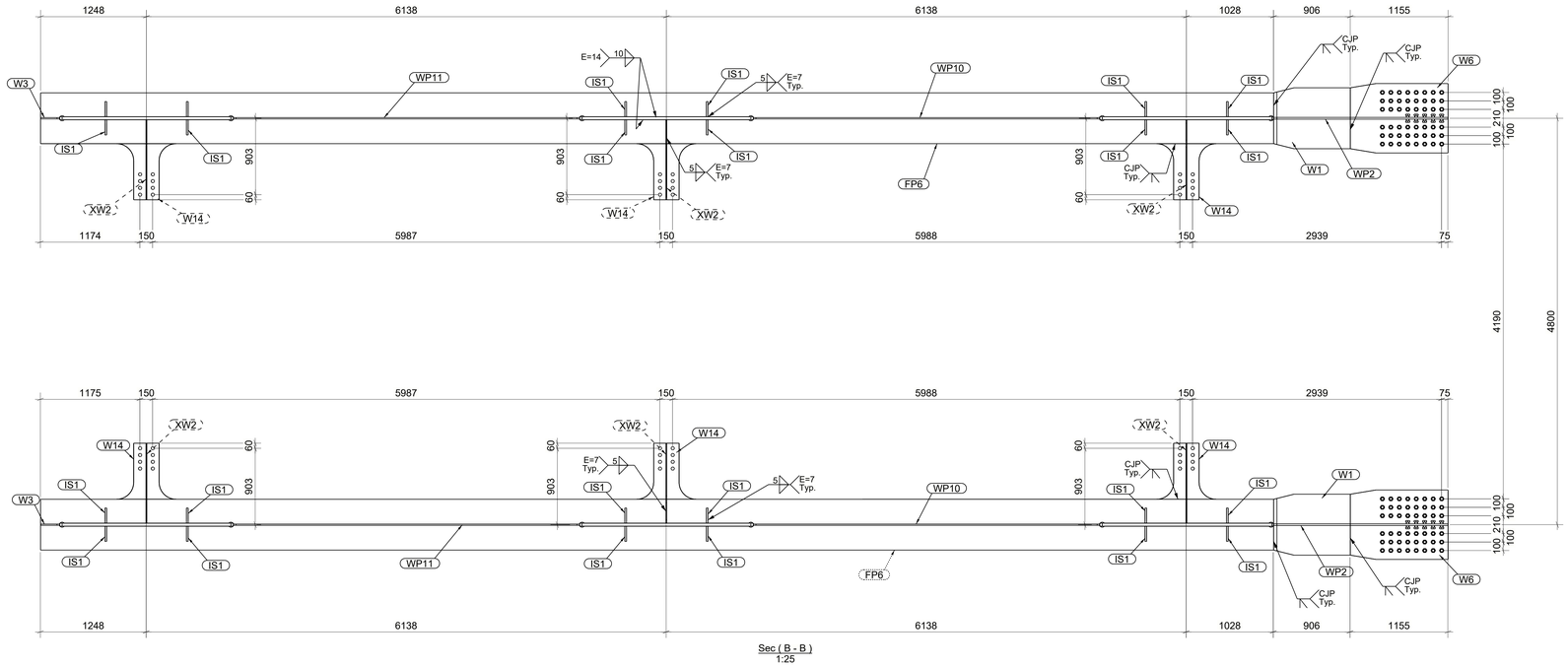

Sec (B - B)
1:25

Sec (E2 - E2)
1:25

GENERAL NOTES:

1. ALL DIMENSIONS ARE IN MILLIMETERS UNLESS OTHERWISE SPECIFIED.
2. LEVELS ARE IN METERS
3. DESIGN SERVICE LIFE OF 100 YEARS.
4. FLANGES OF TOP AND BOTTOM CHORDS TO BE SUPPLIED WITH IMPROVED THROUGH THICKNESS PROPERTIES Z25 ACCORDING TO EN10164.

REFERENCE DRAWINGS

1	93M-0407-SEN-6OL11-END-10118-B PAGE 01:17
2	
3	
4	
5	
6	
7	
8	
9	
10	
11	

6TH OF OCTOBER CITY RAIL TRANSIT MONORAIL &
NEW CAPITAL CITY RAIL TRANSIT MONORAIL

The Authority
Hill International
Authority Consultant

ORASCOM CONSTRUCTION
BOMBARDIER
Main Contractor

SENER
SHAKER CONSULTANCY GROUP
Designer

CONTRACTOR
CONSULTANT

ENGINEERING HOUSE FOR CONSULTANCY

6 October Monorail
Engineering Unit
Valid For Construction

SCALE	SHOP DRAWING	DATE
AS SHOWN		20.11.2024

REV	DATE	BY	DESCRIPTION	CHK	APD
A	20-11-24	M.SH	ISSUE FOR APPROVAL	A.SH	M.M

DRAWING TITLE:
6TH OF OCTOBER MONORAIL
SHOP DRAWING FOR BRIDGE 6OL11-37
STEEL TRUSS (I).
TR2.3

Project Code	Rubric	Initiator	Lot	Ref	Number	Revision
93M	0407	ACC	6OL11	DWG	90019	A

Area structures

-Drawing shall be updated according to the comments on the GA drawing.
-Approval is subjected to the approval of coordination package between multi-discipline.

REVIEWED WITH COMMENT
MONORAILS PROJECT

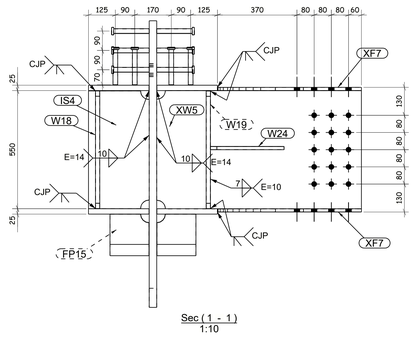

Sec (1 - 1)
1:10

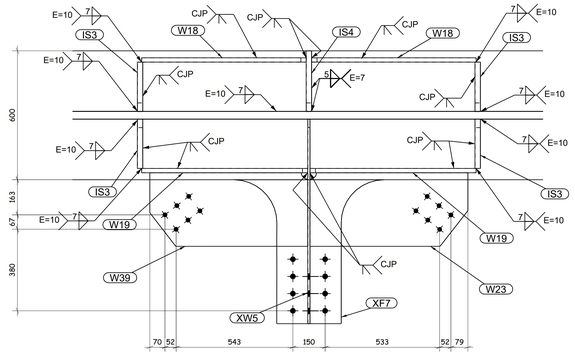

Sec (2 - 2)
1:10

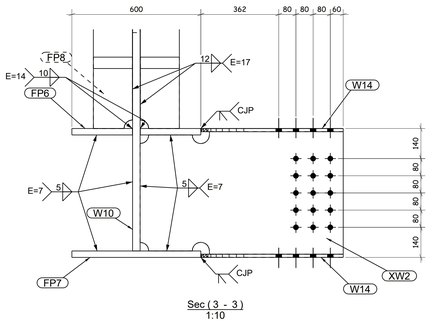

Sec (3 - 3)
1:10

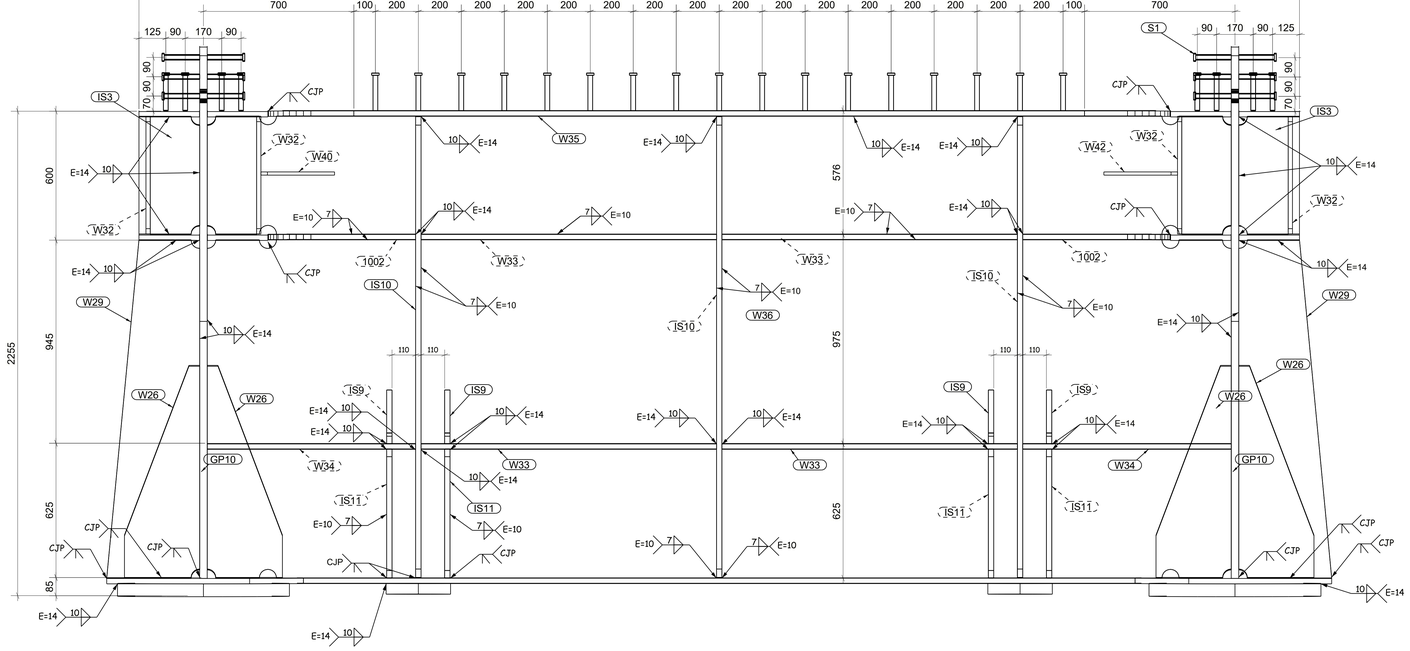

Sec (C - C)
1:10

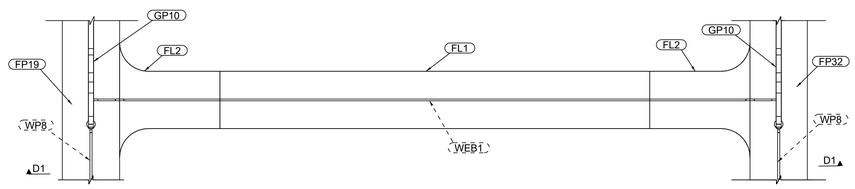

Sec (D - D)
1:15

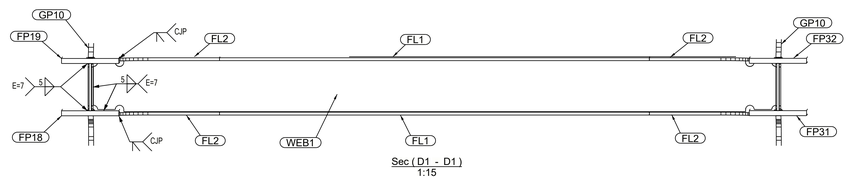

Sec (D1 - D1)
1:15

GENERAL NOTES:

1. ALL DIMENSIONS ARE IN MILLIMETERS UNLESS OTHERWISE SPECIFIED.
2. LEVELS ARE IN METERS
3. DESIGN SERVICE LIFE OF 100 YEARS.
4. FLANGES OF TOP AND BOTTOM CHORDS TO BE SUPPLIED WITH IMPROVED THROUGH THICKNESS PROPERTIES Z25 ACCORDING TO EN10164.

REFERENCE DRAWINGS

1	93M-0407-SEN-6OL11-END-10118-B PAGE 01:17
2	
3	
4	
5	
6	
7	
8	
9	
10	
11	

6TH OF OCTOBER CITY RAIL TRANSIT MONORAIL &
NEW CAPITAL CITY RAIL TRANSIT MONORAIL

The Authority
Hill International
Authority Consultant

Main Contractor

Designer

6 October Monorail
Engineering Unit
Valid For Construction

CONTRACTOR
CONSULTANT

ENGINEERING HOUSE FOR CONSULTANCY

SCALE	SHOP DRAWING	DATE
AS SHOWN		20.11.2024

REV	DATE	BY	DESCRIPTION	CHK	APD
A	20-11-24	M.SH	ISSUE FOR APPROVAL	A.SH	M.M

DRAWING TITLE:
6TH OF OCTOBER MONORAIL
SHOP DRAWING FOR BRIDGE 6OL11-37
STEEL TRUSS (I).
TR2.4

Project Code	Rubric	Initiator	Lot	Ref	Number	Revision
93M	0407	ACC	60L11	DWG	90020	A

Data structures

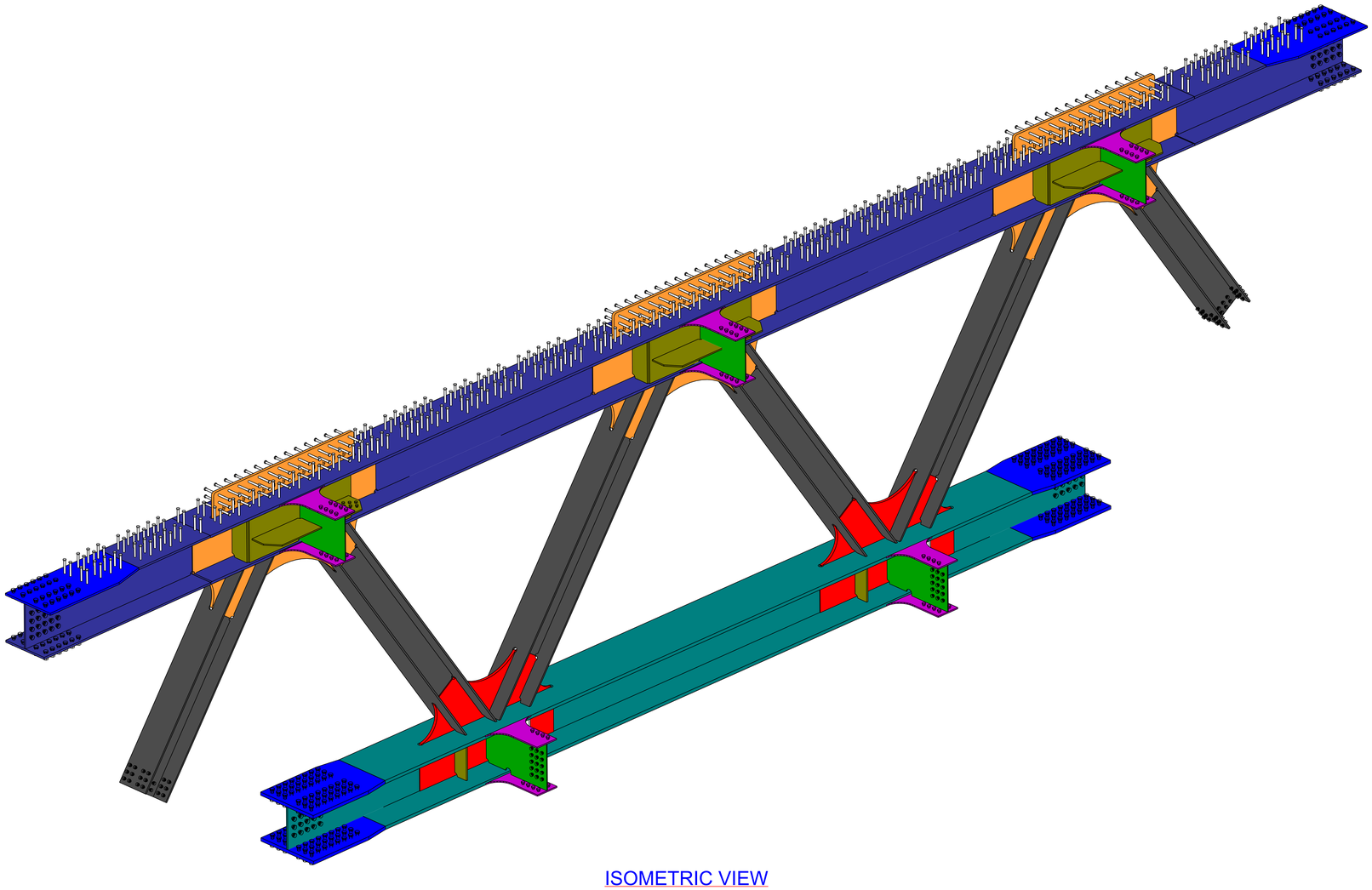

ISOMETRIC VIEW

ERECTION MARK : TR3 QTY : 1 NOS

POS NO.	QTY PER ASSLY	SECTION	LENGTH	UNIT WEIGHT (Kg)	TOTAL QTY	TOTAL WEIGHT	GRADE
WP3	1	PL12*360	2588	88	1	88.0	S355J2N
FP1	2	PL20*400.0	4026	243	2	486.0	S355J2N
FP2	2	PL20*400.0	4026	243	2	486.0	S355J2N
FP3	2	PL25*600.0	2554	301	2	602.0	S355J2N
FP4	2	PL20*400.0	4030	243	2	486.0	S355J2N
FP5	2	PL20*400.0	4030	243	2	486.0	S355J2N
FP22	2	PL25*600.0	1096	129	2	258.0	S355J2N
FP23	1	PL40*720.0	9922	2195	1	2195.0	S355J2N
FP24	1	PL40*720.0	9920	2243	1	2243.0	S355J2N
FP25	2	PL20*400.0	3032	184	2	368.0	S355J2N
FP26	2	PL20*400.0	2769	169	2	338.0	S355J2N
FP27	1	PL30*600.0	15087	2073	1	2073.0	S355J2N
FP28	1	PL30*600.0	15085	2057	1	2057.0	S355J2N
GP3	2	PL35*1619.0	2810	942	2	1884.0	S355J2N
GP4	1	PL35*1619.0	2810	942	1	942.0	S355J2N
IS2	8	PL20*180.0	518	14	8	112.0	S355J2N
IS5	12	PL24*230.0	538	24	12	288.0	S355J2N
IS6	3	PL24*283.0	538	29	3	87.0	S355J2N
S1	516	ROD22	175	1	516	516.0	S235JRG3
W4	2	PL25*700.0	1457	196	2	392.0	S355J2N
W7	2	PL40*820.0	1151	292	2	584.0	S355J2N
W9	2	PL40*820.0	1152	292	2	584.0	S355J2N
W13	1	PL35*1200.0	2052	540	1	540.0	S355J2N
W15	4	PL15*603.0	700	23	4	92.0	S355J2N
W17	1	PL35*1200.0	2052	540	1	540.0	S355J2N
W20	6	PL20*538.0	766	65	6	390.0	S355J2N
W21	6	PL20*538.0	773	65	6	390.0	S355J2N
W23	1	PL15*343.0	735	28	1	28.0	S235
W24	1	PL15*343.0	735	28	1	28.0	S235
W25	3	PL15*343.0	735	28	3	84.0	S235
W43	1	PL15*343.0	735	28	1	28.0	S235
WP1	2	PL20*520.0	2018	165	2	330.0	S355J2N
WP3	3	PL12*360.0	2589	88	3	264.0	S355J2N
WP4	2	PL20*550.0	2555	220	2	440.0	S355J2N
WP13	1	PL20*520.0	4086	333	1	333.0	S355J2N
WP16	2	PL20*540.0	3329	282	2	564.0	S355J2N
WP17	2	PL12*360.0	2129	72	2	144.0	S355J2N
XF7	6	PL15*670.0	697	26	6	156.0	S355J2N
XW3	2	PL10*570.0	945	40	2	80.0	S355J2N
XW6	2	PL10*550.0	953	41	2	82.0	S355J2N
XW7	1	PL10*550.0	953	41	1	41.0	S355J2N
				TOTAL WEIGHT :		22109.0	

Highlighted items have a material that is not matching with the design reference.

STRUCTURAL STEEL

- PLATES:
  - t ≤ 40mm S355J2N [EN 10025 : 2018]
  - t > 40mm S355K2N [EN 10025 : 2018]
- SHAPES (UPN 200)
  - S355J0N [EN 10025:2018]

REVIEWED WITH COMMENT MONORAILS PROJECT

GENERAL NOTES:

1. ALL DIMENSIONS ARE IN MILLIMETERS UNLESS OTHERWISE SPECIFIED.
2. LEVELS ARE IN METERS
3. DESIGN SERVICE LIFE OF 100 YEARS.
4. FLANGES OF TOP AND BOTTOM CHORDS TO BE SUPPLIED WITH IMPROVED THROUGH THICKNESS PROPERTIES Z25 ACCORDING TO EN10164.

REFERENCE DRAWINGS

1	93M-0407-SEN-6OL11-END-10118-B PAGE 01:17
2	
3	
4	
5	
6	
7	
8	
9	
10	
11	

6TH OF OCTOBER CITY RAIL TRANSIT MONORAIL & NEW CAPITAL CITY RAIL TRANSIT MONORAIL

The Authority — Hill International — Authority Consultant

ORASCOM CONSTRUCTION — BOMBARDIER — Main Contractor

SENER — SHAKER CONSULTANCY GROUP — Designer

CONTRACTOR CONSULTANT

ENGINEERING HOUSE FOR CONSULTANCY

6 October Monorail Engineering Unit Valid For Construction

SCALE: AS SHOWN | SHOP DRAWING | DATE: 20.11.2024

REV	DATE	BY	DESCRIPTION	CHK	APD
A	20-11-24	M.SH	ISSUE FOR APPROVAL	A.SH	M.M

DRAWING TITLE:
6TH OF OCTOBER MONORAIL
SHOP DRAWING FOR BRIDGE 6OL11-37
STEEL TRUSS (I).
TR3.1

Project Code	Rubric	Initiator	Lot	Ref	Number	Revision
93M	0407	ACC	60L11	DWG	90021	A

-Drawing shall be updated according to the comments on the GA drawing.
-Approval is subjected to the approval of coordination package between multi-discipline.

REVIEWED WITH COMMENT
MONORAILS PROJECT

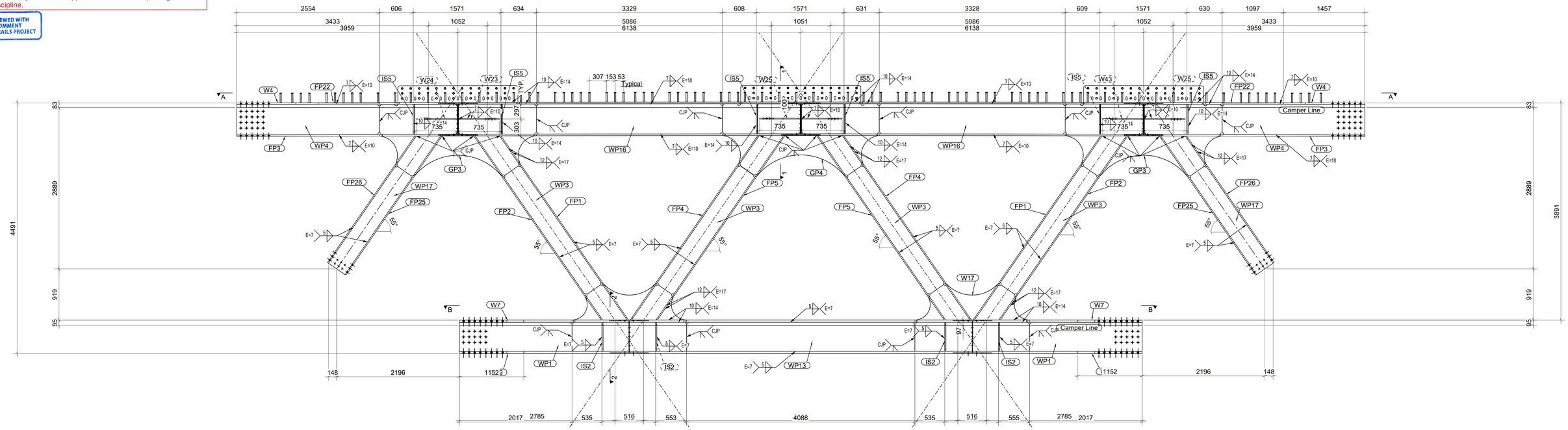

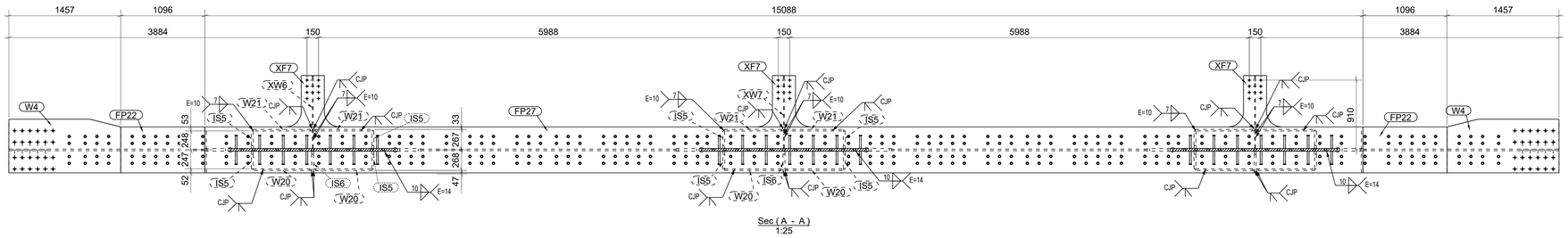

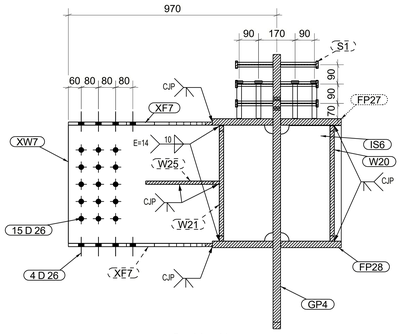

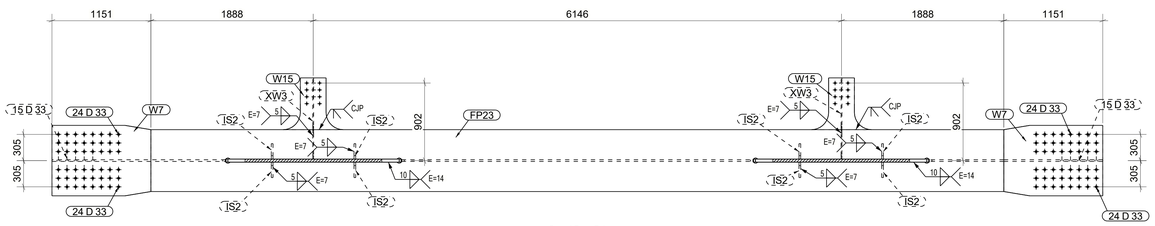

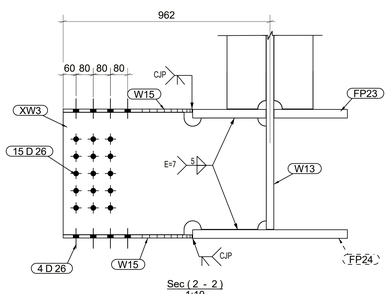

GENERAL NOTES:

1. ALL DIMENSIONS ARE IN MILLIMETERS UNLESS OTHERWISE SPECIFIED.
2. LEVELS ARE IN METERS
3. DESIGN SERVICE LIFE OF 100 YEARS.
4. FLANGES OF TOP AND BOTTOM CHORDS TO BE SUPPLIED WITH IMPROVED THROUGH THICKNESS PROPERTIES Z25 ACCORDING TO EN10164.

REFERENCE DRAWINGS

1	93M-0407-SEN-6OL11-END-10118-B PAGE 01:17
2	
3	
4	
5	
6	
7	
8	
9	
10	
11	

6TH OF OCTOBER CITY RAIL TRANSIT MONORAIL &
NEW CAPITAL CITY RAIL TRANSIT MONORAIL

The Authority — Hill International Authority Consultant — Main Contractor — Designer

CONTRACTOR
CONSULTANT

ENGINEERING HOUSE FOR CONSULTANCY

SCALE: AS SHOWN | SHOP DRAWING | DATE: 20.11.2024

REV	DATE	BY	DESCRIPTION	CHK	APD
A	20-11-24	M.SH	ISSUE FOR APPROVAL	A.SH	M.M

6 October Monorail
Engineering Unit
Valid For Construction

DRAWING TITLE:
6TH OF OCTOBER MONORAIL
SHOP DRAWING FOR BRIDGE 6OL11-37
STEEL TRUSS (I).
TR3.2

Project Code	Rubric	Initiator	Lot	Ref	Number	Revision
93M	0407	ACC	60L11	DWG	90022	A

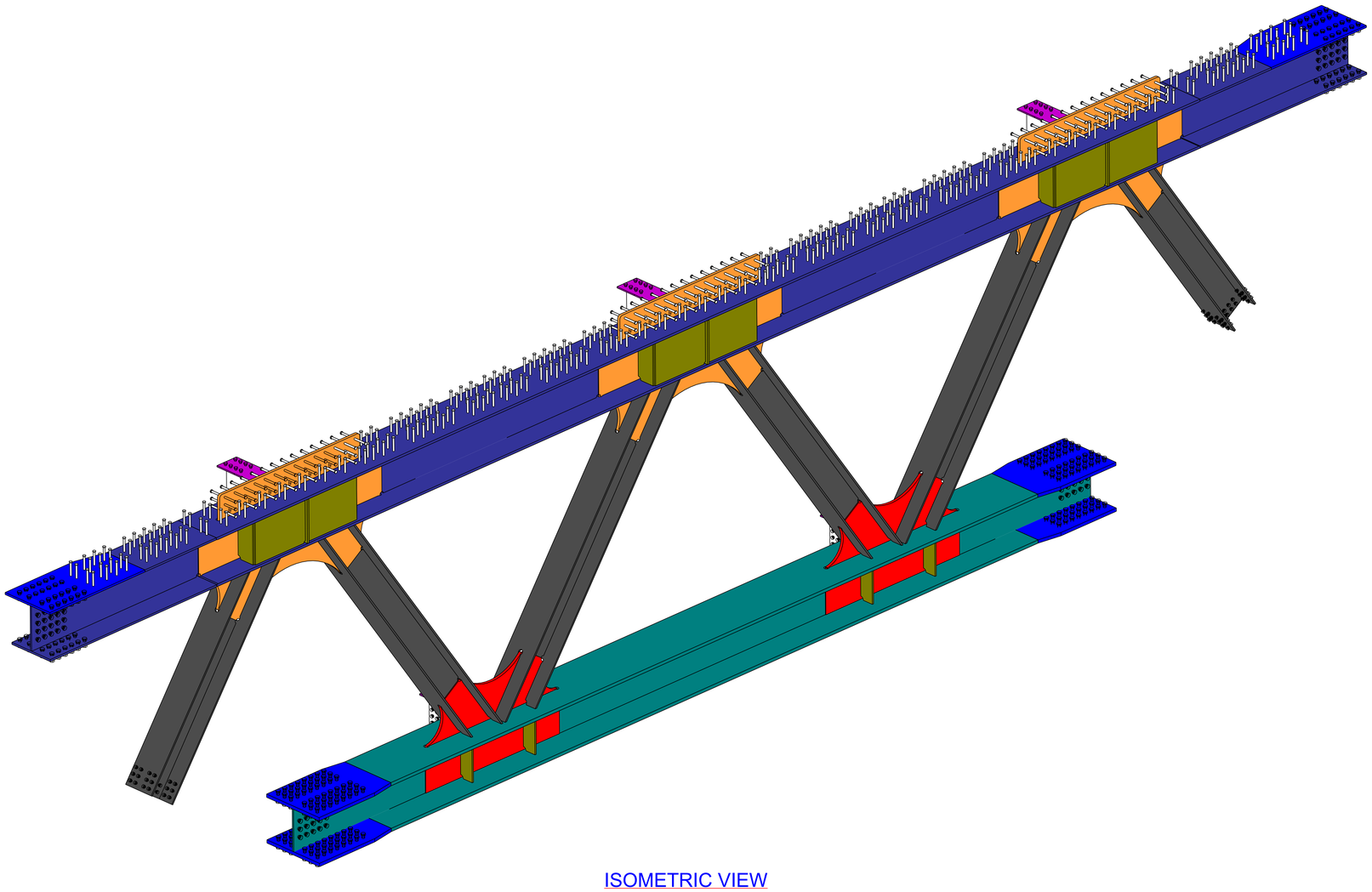

ISOMETRIC VIEW

ERECTION MARK :	TR4				QTY :	1	NOS
POS NO.	QTY PER ASSLY	SECTION	LENGTH	UNIT WEIGHT (Kg)	TOTAL QTY	TOTAL WEIGHT	GRADE
WP3	1	PL12*360	2588	88	1	88.0	S355J2N
FP1	2	PL20*400.0	4026	243	2	486.0	S355J2N
FP2	2	PL20*400.0	4026	243	2	486.0	S355J2N
FP3	2	PL25*600.0	2554	301	2	602.0	S355J2N
FP4	2	PL20*400.0	4030	243	2	486.0	S355J2N
FP5	2	PL20*400.0	4030	243	2	486.0	S355J2N
FP22	2	PL25*600.0	1096	129	2	258.0	S355J2N
FP23	1	PL40*720.0	9922	2195	1	2195.0	S355J2N
FP24	1	PL40*720.0	9920	2243	1	2243.0	S355J2N
FP25	2	PL20*400.0	3032	184	2	368.0	S355J2N
FP26	2	PL20*400.0	2769	169	2	338.0	S355J2N
FP27	1	PL30*600.0	15087	2073	1	2073.0	S355J2N
FP28	1	PL30*600.0	15085	2057	1	2057.0	S355J2N
GP3	2	PL35*1619.0	2810	942	2	1884.0	S355J2N
GP4	1	PL35*1619.0	2810	942	1	942.0	S355J2N
IS2	8	PL20*180.0	518	14	8	112.0	S355J2N
IS5	12	PL25*230.0	538	24	12	288.0	S355J2N
IS6	3	PL25*283.0	538	29	3	87.0	S355J2N
S1	516	ROD22	175	1	516	516.0	S235J2G3
W4	2	PL25*700.0	1457	196	2	392.0	S355J2N
W7	2	PL40*820.0	1151	292	2	584.0	S355J2N
W9	2	PL40*820.0	1152	292	2	584.0	S355J2N
W13	1	PL35*1200.0	2052	540	1	540.0	S355J2N
W15	4	PL15*603.0	700	23	4	92.0	S355J2N
W17	1	PL35*1200.0	2052	540	1	540.0	S355J2N
W20	6	PL20*538.0	766	65	6	390.0	S355J2N
W21	6	PL20*538.0	773	65	6	390.0	S355J2N
W23	1	PL15*343.0	735	28	1	28.0	S235
W24	1	PL15*343.0	735	28	1	28.0	S235
W25	3	PL15*343.0	735	28	3	84.0	S235
W43	1	PL15*343.0	735	28	1	28.0	S235
WP1	2	PL20*520.0	2018	165	2	330.0	S355J2N
WP3	3	PL12*360.0	2589	88	3	264.0	S355J2N
WP4	2	PL20*550.0	2555	220	2	440.0	S355J2N
WP13	1	PL20*520.0	4086	333	1	333.0	S355J2N
WP16	2	PL20*540.0	3329	282	2	564.0	S355J2N
WP17	2	PL12*360.0	2129	72	2	144.0	S355J2N
XF7	6	PL15*670.0	697	26	6	156.0	S355J2N
XW3	2	PL10*570.0	945	40	2	80.0	S355J2N
XW6	2	PL10*550.0	953	41	2	82.0	S355J2N
XW7	1	PL10*550.0	953	41	1	41.0	S355J2N
				TOTAL WEIGHT :		22109.0	

Highlighted items have a material that is not matching with the design reference.

STRUCTURAL STEEL

- PLATES:
  - t ≤ 40mm S355J2N [EN 10025 : 2018]
  - t > 40mm S355K2N [EN 10025 : 2018]
- SHAPES (UPN 200)
  - S355J0N [EN 10025:2018]

REVIEWED WITH COMMENT MONORAILS PROJECT

GENERAL NOTES:

1. ALL DIMENSIONS ARE IN MILLIMETERS UNLESS OTHERWISE SPECIFIED.
2. LEVELS ARE IN METERS
3. DESIGN SERVICE LIFE OF 100 YEARS.
4. FLANGES OF TOP AND BOTTOM CHORDS TO BE SUPPLIED WITH IMPROVED THROUGH THICKNESS PROPERTIES Z25 ACCORDING TO EN10164.

REFERENCE DRAWINGS

1	93M-0407-SEN-6OL11-END-10118-B PAGE 01:17
2	
3	
4	
5	
6	
7	
8	
9	
10	
11	

6TH OF OCTOBER CITY RAIL TRANSIT MONORAIL & NEW CAPITAL CITY RAIL TRANSIT MONORAIL

The Authority — Hill International Authority Consultant

Main Contractor: ORASCOM CONSTRUCTION / BOMBARDIER

Designer: SENER / SHAKER CONSULTANCY GROUP

CONTRACTOR
CONSULTANT

ENGINEERING HOUSE FOR CONSULTANCY

6 October Monorail Engineering Unit
Valid For Construction

SCALE	SHOP DRAWING	DATE
AS SHOWN		20.11.2024

REV	DATE	BY	DESCRIPTION	CHK	APD
A	20-11-24	M.SH	ISSUE FOR APPROVAL	A.SH	M.M

DRAWING TITLE:
6TH OF OCTOBER MONORAIL
SHOP DRAWING FOR BRIDGE 6OL11-37
STEEL TRUSS (I).
TR4.1

Project Code	Rubric	Initiator	Lot	Ref	Number	Revision
93M	0407	ACC	60L11	DWG	90023	A

-Drawing shall be updated according to the comments on the GA drawing.
-Approval is subjected to the approval of coordination package between multi-discipline.

REVIEWED WITH COMMENT MONORAILS PROJECT

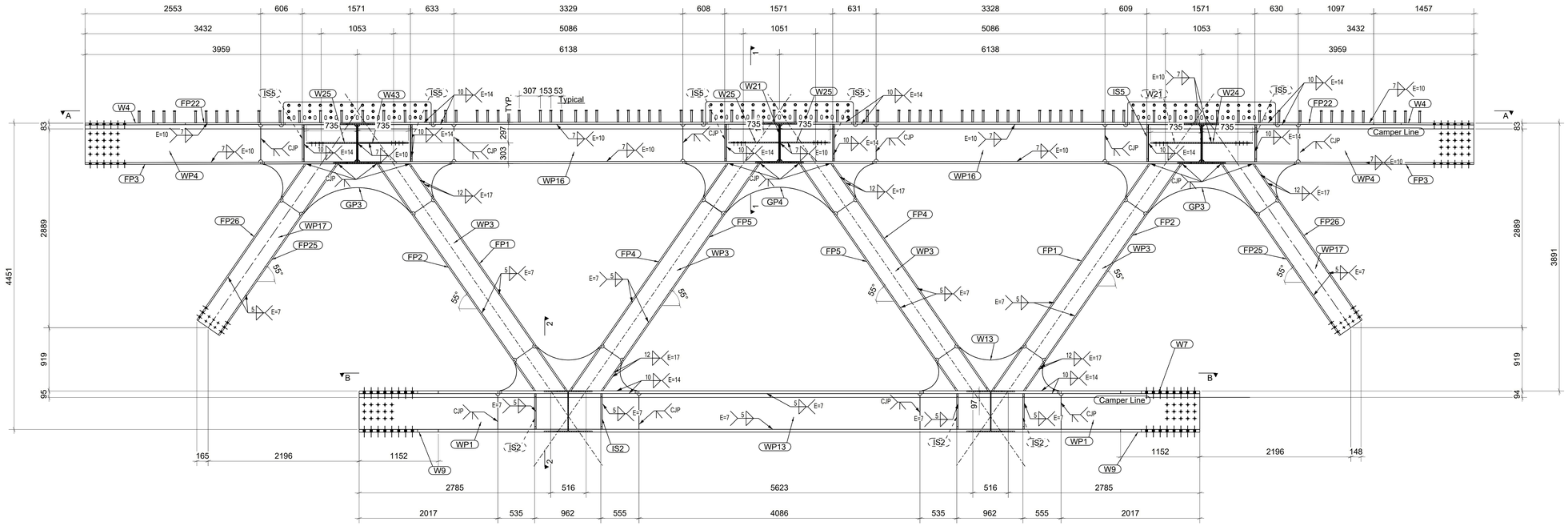

Sec (A - A)
1:25

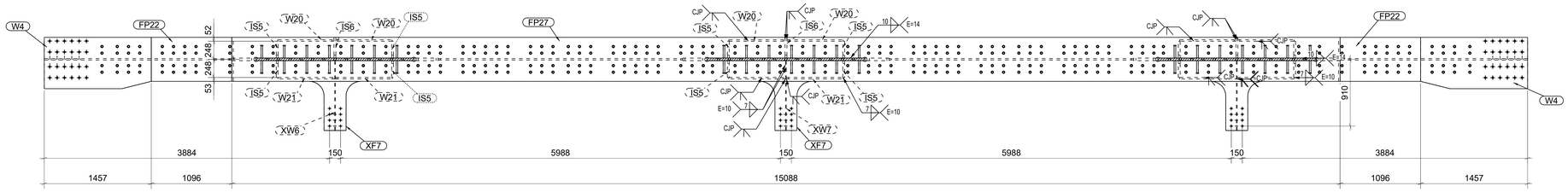

Sec (1 - 1)
1:10

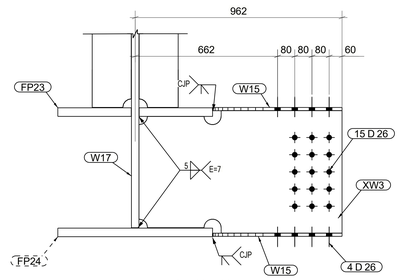

Sec (2 - 2)
1:10

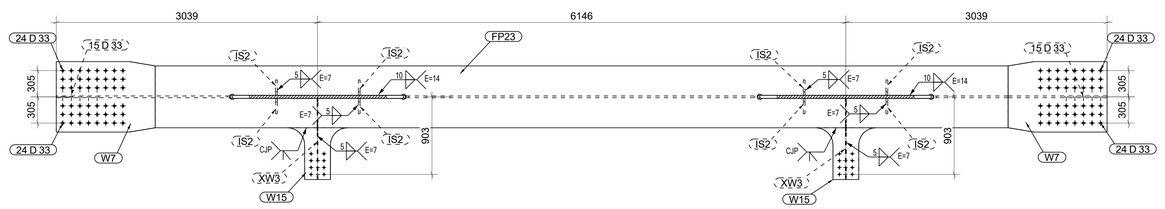

Sec (B - B)
1:25

GENERAL NOTES:

1. ALL DIMENSIONS ARE IN MILLIMETERS UNLESS OTHERWISE SPECIFIED.
2. LEVELS ARE IN METERS
3. DESIGN SERVICE LIFE OF 100 YEARS.
4. FLANGES OF TOP AND BOTTOM CHORDS TO BE SUPPLIED WITH IMPROVED THROUGH THICKNESS PROPERTIES Z25 ACCORDING TO EN10164.

REFERENCE DRAWINGS

1	93M-0407-SEN-6OL11-END-10118-B PAGE 01:17
2	
3	
4	
5	
6	
7	
8	
9	
10	
11	

6TH OF OCTOBER CITY RAIL TRANSIT MONORAIL &
NEW CAPITAL CITY RAIL TRANSIT MONORAIL

The Authority — Hill International Authority Consultant
ORASCOM CONSTRUCTION — BOMBARDIER — Main Contractor
SENER — SHAKER CONSULTANCY GROUP — Designer

6 October Monorail
Engineering Unit
Valid For Construction

CONTRACTOR
CONSULTANT
ENGINEERING HOUSE FOR CONSULTANCY

SCALE: AS SHOWN | SHOP DRAWING | DATE: 20.11.2024

REV	DATE	BY	DESCRIPTION	CHK	APD
A	20-11-24	M.SH	ISSUE FOR APPROVAL	A.SH	M.M

DRAWING TITLE:
6TH OF OCTOBER MONORAIL
SHOP DRAWING FOR BRIDGE 6OL11-37
STEEL TRUSS (I).
TR4.2

Project Code	Rubric	Initiator	Lot	Ref	Number	Revision
9 3 M	0 4 0 7	A C C	6 0 L 1 1	D W G	90024	A

Data structures

-Drawing shall be updated according to the comments on the GA drawing.
-Approval is subjected to the approval of coordination package between multi-discipline.

REVIEWED WITH COMMENT
MONORAILS PROJECT

ERECTION MARK : X.G1							QTY : 8 NOS
POS NO.	QTY PER ASSLY	SECTION	LENGTH	UNIT WEIGHT (Kg)	TOTAL QTY	TOTAL WEIGHT	GRADE
XF3	1	FLT15*300	2855	101	8	807.0	S355J2N
XF3	1	PL15*300.0	2855	101	8	807.0	S355J2N
XW1	1	PL10*570.0	2855	128	8	1022.0	S355J2N
				TOTAL WEIGHT :		2636.0	

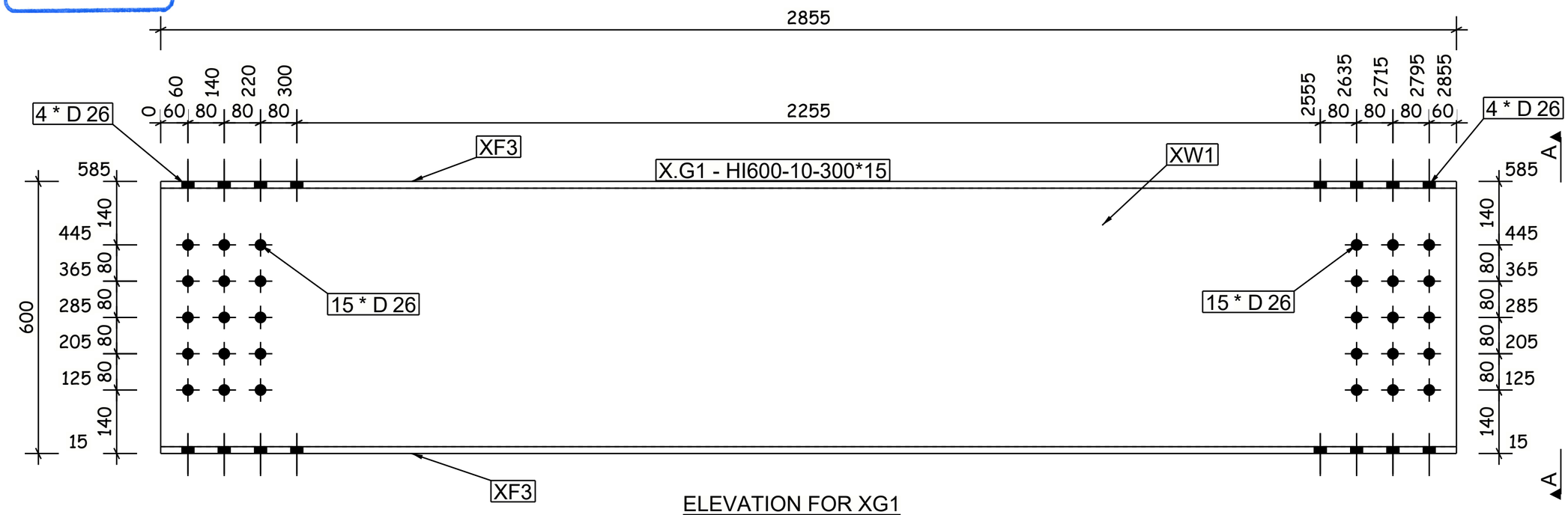

ELEVATION FOR XG1
1:10

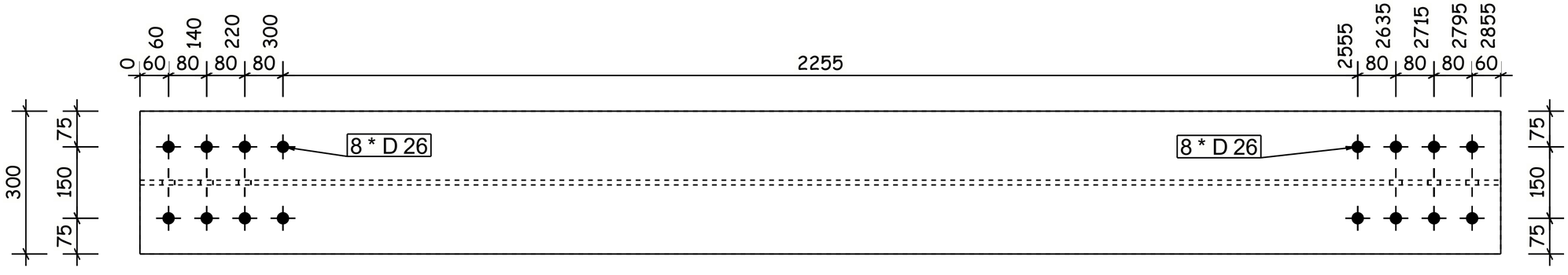

PLAN FOR XG1
1:10

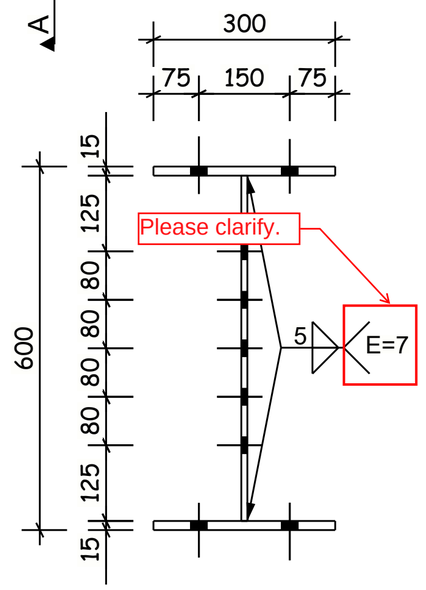

Sec (A - A)
1:10

GENERAL NOTES:

1. ALL DIMENSIONS ARE IN MILLIMETERS UNLESS OTHERWISE SPECIFIED.
2. LEVELS ARE IN METERS
3. DESIGN SERVICE LIFE OF 100 YEARS.
4. FLANGES OF TOP AND BOTTOM CHORDS TO BE SUPPLIED WITH IMPROVED THROUGH THICKNESS PROPERTIES Z25 ACCORDING TO EN10164.

REFERENCE DRAWINGS

1	93M-0407-SEN-6OL11-END-10118-B PAGE 01:17
2	
3	
4	
5	
6	
7	
8	
9	
10	
11	

6TH OF OCTOBER CITY RAIL TRANSIT MONORAIL &
NEW CAPITAL CITY RAIL TRANSIT MONORAIL

The Authority — Authority Consultant
Main Contractor
Designer

CONTRACTOR :
CONSULTANT :
ENGINEERING HOUSE FOR CONSULTANCY

SCALE : AS SHOWN | SHOP DRAWING | DATE : 20.11.2024

REV	DATE	BY	DESCRIPTION	CHK	APD
A	20-11-24	M.SH	ISSUE FOR APPROVAL	A.SH	M.M

6 October Monorail
Engineering Unit
Valid For Construction

DRAWING TITLE:
6TH OF OCTOBER MONORAIL
SHOP DRAWING FOR BRIDGE 6OL11-37
STEEL TRUSS (I).
X.G.1

Project Code	Rubric	Initiator	Lot	Ref	Number	Revision
9 3 M	0 4 0 7	A C C	6 0 L 1 1	D W G	90025	A

Tekla structures

-Drawing shall be updated according to the comments on the GA drawing.
-Approval is subjected to the approval of coordination package between multi-discipline.

REVIEWED WITH COMMENT
MONORAILS PROJECT

ERECTION MARK : X.G2							QTY : 7 NOS
POS NO.	QTY PER ASSLY	SECTION	LENGTH	UNIT WEIGHT (Kg)	TOTAL QTY	TOTAL WEIGHT	GRADE
XF5	1	FLT15*300	2840	100	7	702.0	S355J2N
XF5	1	PL15*300.0	2840	100	7	702.0	S355J2N
XW4	1	PL10*550.0	2840	123	7	858.0	S355J2N
				TOTAL WEIGHT :		2262.0	

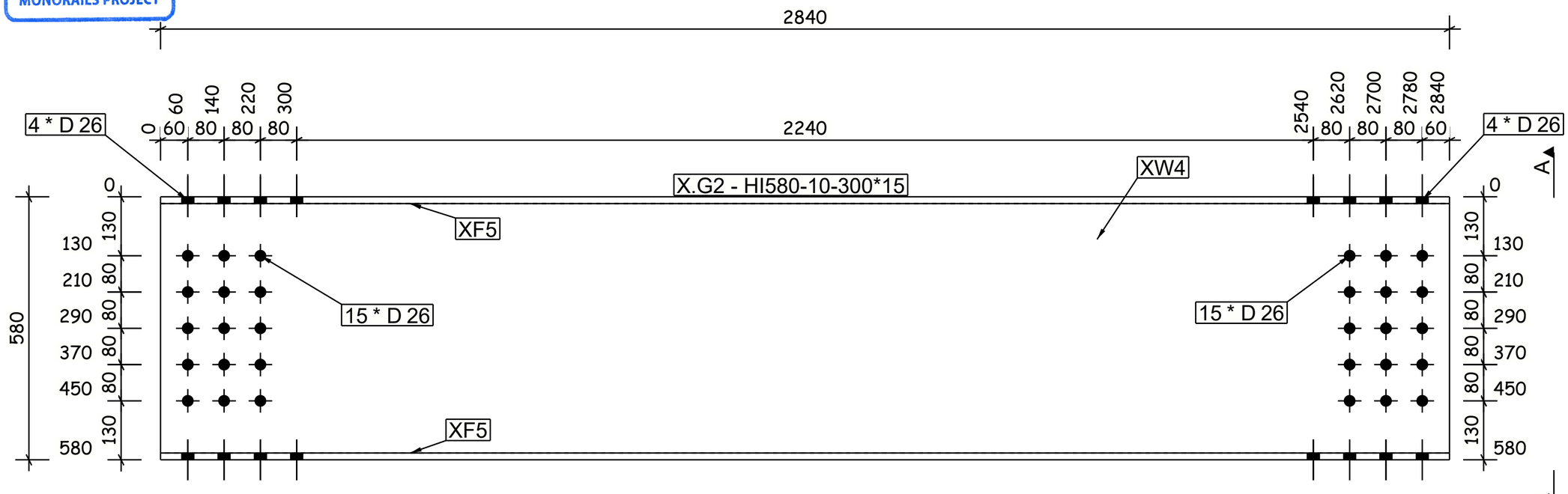

ELEVATION FOR XG2
1:10

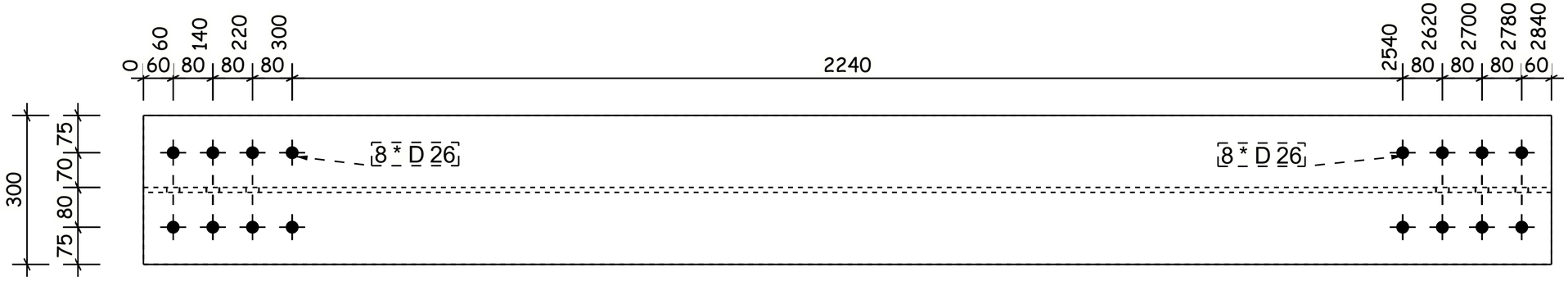

PLAN FOR XG2
1:10

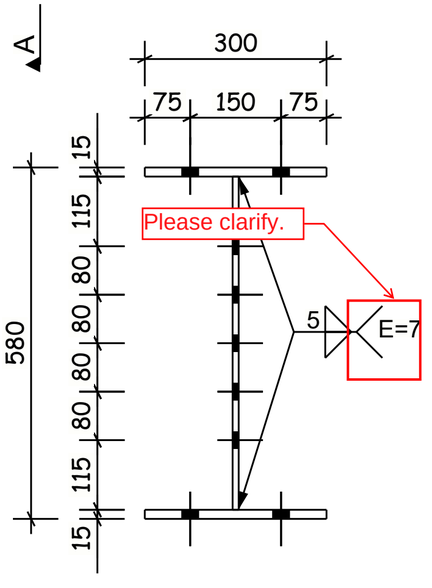

Sec (A - A)
1:10

GENERAL NOTES:

1. ALL DIMENSIONS ARE IN MILLIMETERS UNLESS OTHERWISE SPECIFIED.
2. LEVELS ARE IN METERS
3. DESIGN SERVICE LIFE OF 100 YEARS.
4. FLANGES OF TOP AND BOTTOM CHORDS TO BE SUPPLIED WITH IMPROVED THROUGH THICKNESS PROPERTIES Z25 ACCORDING TO EN10164.

REFERENCE DRAWINGS

1	93M-0407-SEN-6OL11-END-10118-B PAGE 01:17
2	
3	
4	
5	
6	
7	
8	
9	
10	
11	

6TH OF OCTOBER CITY RAIL TRANSIT MONORAIL &
NEW CAPITAL CITY RAIL TRANSIT MONORAIL

The Authority
Hill International
Authority Consultant

Main Contractor

Designer

CONTRACTOR :
CONSULTANT :
ENGINEERING HOUSE FOR CONSULTANCY

SCALE : AS SHOWN | SHOP DRAWING | DATE : 20.11.2024

REV	DATE	BY	DESCRIPTION	CHK	APD
A	20-11-24	M.SH	ISSUE FOR APPROVAL	A.SH	M.M

6 October Monorail
Engineering Unit
Valid For Construction

DRAWING TITLE:
6TH OF OCTOBER MONORAIL
SHOP DRAWING FOR BRIDGE 6OL11-37
STEEL TRUSS (I).
X.G.2

Project Code	Rubric	Initiator	Lot	Ref	Number	Revision
9 3 M	0 4 0 7	A C C	6 0 L 1 1	D W G	90026	A

Tekla structures

-Drawing shall be updated according to the comments on the GA drawing.
-Approval is subjected to the approval of coordination package between multi-discipline.

REVIEWED WITH COMMENT
MONORAILS PROJECT

ERECTION MARK :		BR1				QTY : 6 NOS	
POS NO.	QTY PER ASSLY	SECTION	LENGTH	UNIT WEIGHT (Kg)	TOTAL QTY	TOTAL WEIGHT	GRADE
L1	1	1/2IPE330	6557	160	6	962.0	S355J0N
L1	1	1/2IPE330	6557	160	6	962.0	S355J0N
W22	1	PL15*197.0	252	5	6	28.0	S355J2N
				TOTAL WEIGHT :		1952.0	

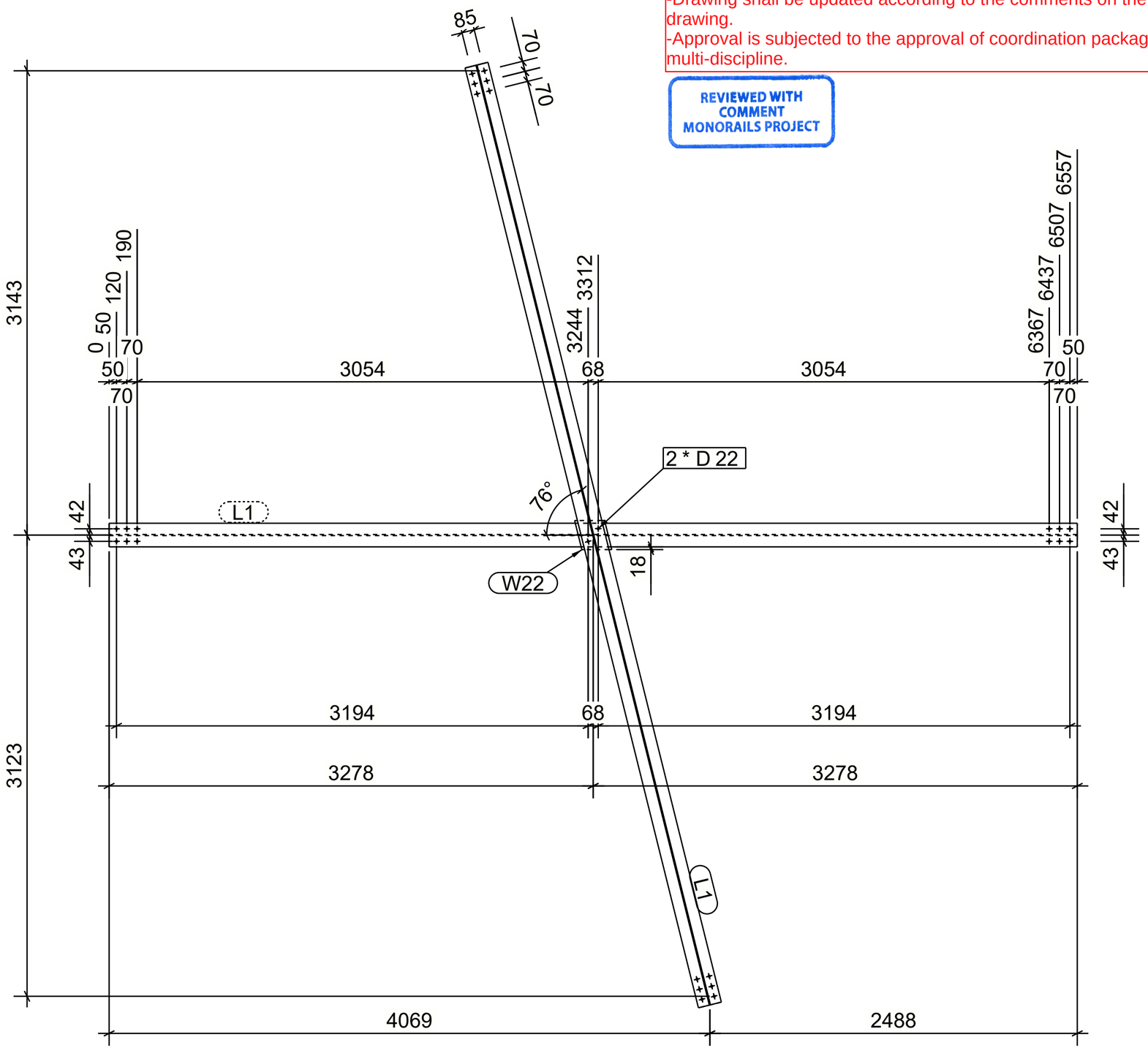

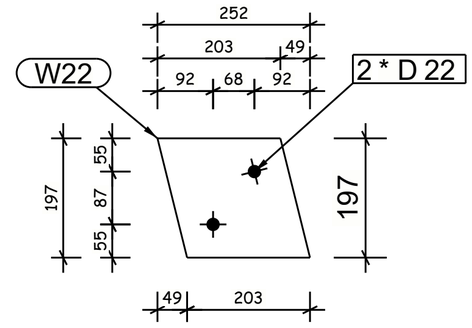

GENERAL NOTES:

1. ALL DIMENSIONS ARE IN MILLIMETERS UNLESS OTHERWISE SPECIFIED.
2. LEVELS ARE IN METERS
3. DESIGN SERVICE LIFE OF 100 YEARS.
4. FLANGES OF TOP AND BOTTOM CHORDS TO BE SUPPLIED WITH IMPROVED THROUGH THICKNESS PROPERTIES Z25 ACCORDING TO EN10164.

REFERENCE DRAWINGS

1	93M-0407-SEN-6OL11-END-10118-B PAGE 01:17
2	
3	
4	
5	
6	
7	
8	
9	
10	
11	

6TH OF OCTOBER CITY RAIL TRANSIT MONORAIL &
NEW CAPITAL CITY RAIL TRANSIT MONORAIL

The Authority — Hill International Authority Consultant — Main Contractor — Designer

CONTRACTOR
CONSULTANT:

ENGINEERING HOUSE FOR CONSULTANCY

SCALE: AS SHOWN | SHOP DRAWING | DATE: 20.11.2024

REV	DATE	BY	DESCRIPTION	CHK	APD
A	20-11-24	M.SH	ISSUE FOR APPROVAL	A.SH	M.M

6 October Monorail
Engineering Unit
Valid For Construction

DRAWING TITLE:
6TH OF OCTOBER MONORAIL
SHOP DRAWING FOR BRIDGE 6OL11-37
STEEL TRUSS (I).
B.R.1

Project Code	Rubric	Initiator	Lot	Ref	Number	Revision
93M	0407	ACC	60L11	DWG	90027	A

Tekla structures

-Drawing shall be updated according to the comments on the GA drawing.
-Approval is subjected to the approval of coordination package between multi-discipline.

REVIEWED WITH COMMENT
MONORAILS PROJECT

ERECTION MARK :	BR2						QTY : 2 NOS
POS NO.	QTY PER ASSLY	SECTION	LENGTH	UNIT WEIGHT (Kg)	TOTAL QTY	TOTAL WEIGHT	GRADE
L2	1	1/2IPE330	6599	161	2	323.0	S355J0N
L3	1	1/2IPE330	6602	161	2	323.0	S355J0N
W38	1	PL15*197.0	254	5	2	9.0	S355J2N
				TOTAL WEIGHT :		655.0	

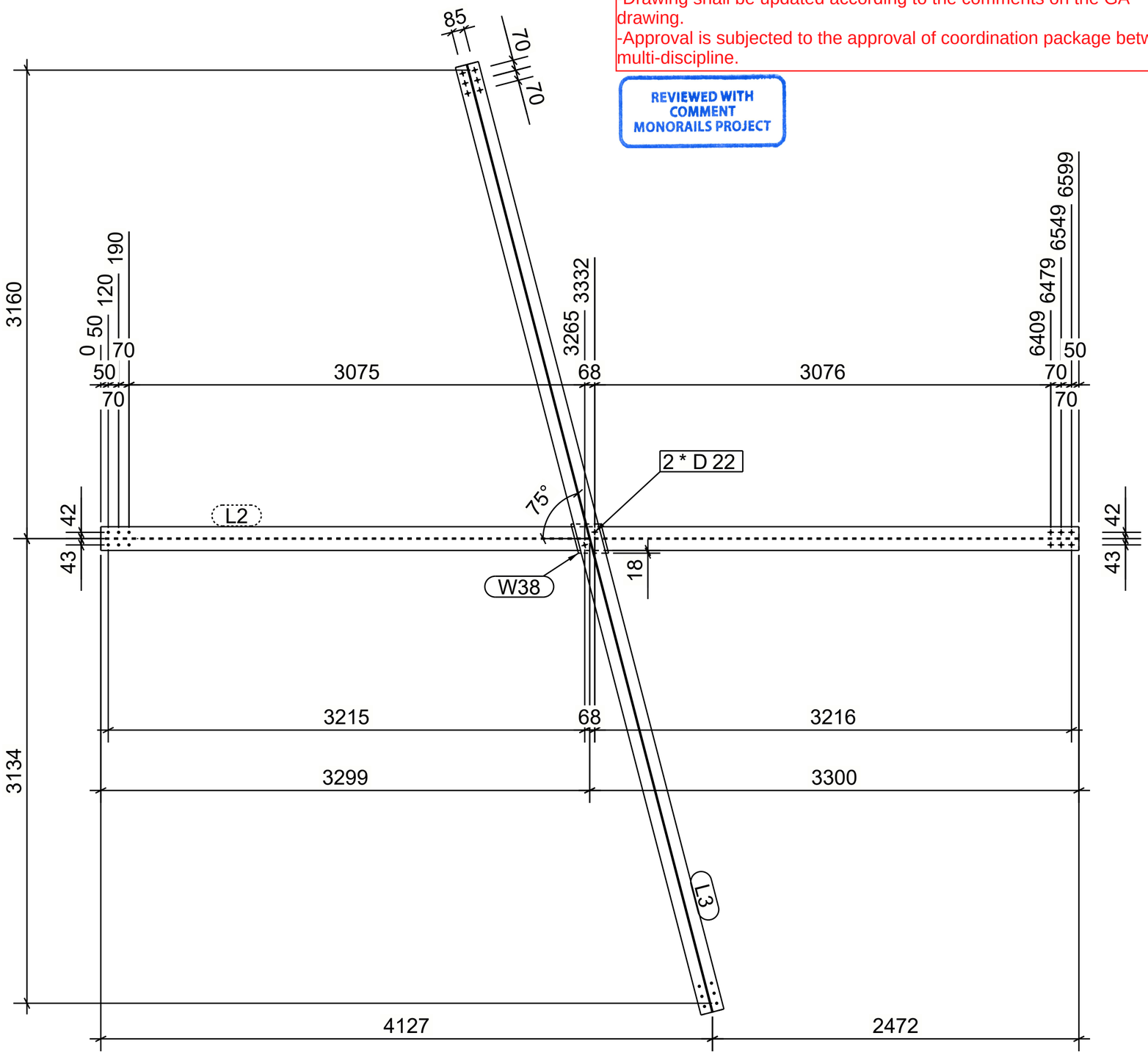

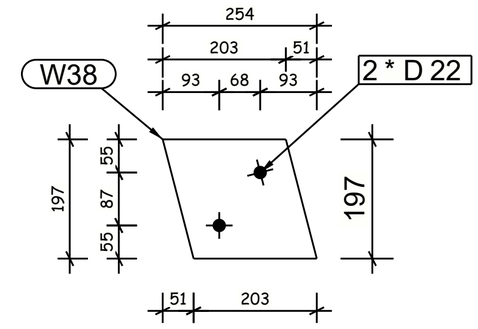

GENERAL NOTES:

1. ALL DIMENSIONS ARE IN MILLIMETERS UNLESS OTHERWISE SPECIFIED.
2. LEVELS ARE IN METERS
3. DESIGN SERVICE LIFE OF 100 YEARS.
4. FLANGES OF TOP AND BOTTOM CHORDS TO BE SUPPLIED WITH IMPROVED THROUGH THICKNESS PROPERTIES Z25 ACCORDING TO EN10164.

REFERENCE DRAWINGS

1	93M-0407-SEN-6OL11-END-10118-B PAGE 01:17
2	
3	
4	
5	
6	
7	
8	
9	
10	
11	

6TH OF OCTOBER CITY RAIL TRANSIT MONORAIL &
NEW CAPITAL CITY RAIL TRANSIT MONORAIL

The Authority — Authority Consultant: Hill International — Main Contractor: ORASCOM CONSTRUCTION — Designer: BOMBARDIER, SENER, SHAKER CONSULTANCY GROUP

CONTRACTOR:
CONSULTANT: ENGINEERING HOUSE FOR CONSULTANCY

6 October Monorail
Engineering Unit
Valid For Construction

SCALE		SHOP DRAWING	DATE
AS SHOWN			20.11.2024

REV	DATE	BY	DESCRIPTION	CHK	APD
A	20-11-24	M.SH	ISSUE FOR APPROVAL	A.SH	M.M

DRAWING TITLE:
6TH OF OCTOBER MONORAIL
SHOP DRAWING FOR BRIDGE 6OL11-37
STEEL TRUSS (I).
B.R.2

Project Code	Rubric	Initiator	Lot	Ref	Number	Revision
93M	0407	ACC	60L11	DWG	90028	A

Tekla structures

-Drawing shall be updated according to the comments on the GA drawing.
-Approval is subjected to the approval of coordination package between multi-discipline.

REVIEWED WITH COMMENT
MONORAILS PROJECT

ERECTION MARK : LP38							QTY : 1 NOS
POS NO.	QTY PER ASSLY	SECTION	LENGTH	UNIT WEIGHT (Kg)	TOTAL QTY	TOTAL WEIGHT	GRADE
LP1	1	PL20*600	1310	123	1	123.0	S355J2N
LP1	1	PL20*600.0	1310	123	1	123.0	S355J2N
LP2	4	PL20*250.0	1310	51	4	204.0	S355J2N
LP3	2	PL20*450.0	1110	78	2	156.0	S355J2N
S1	18	ROD22	175	1	18	18.0	S235J2G3
				TOTAL WEIGHT :-		624.0	

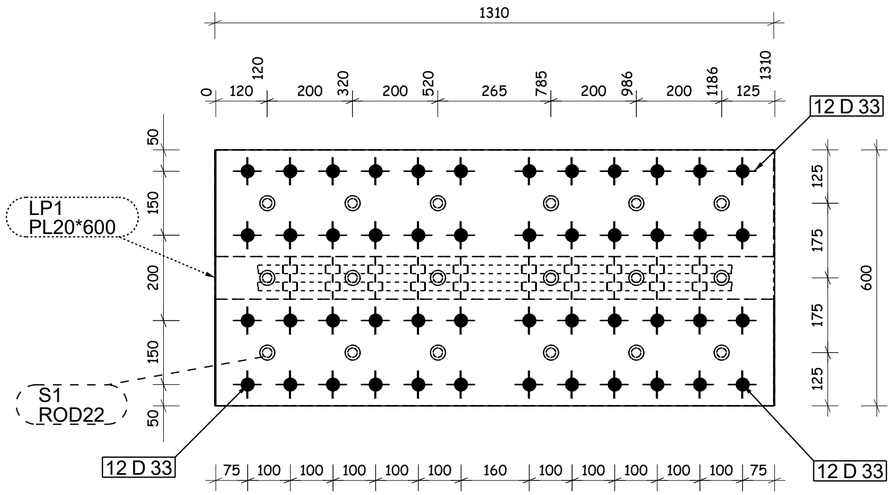

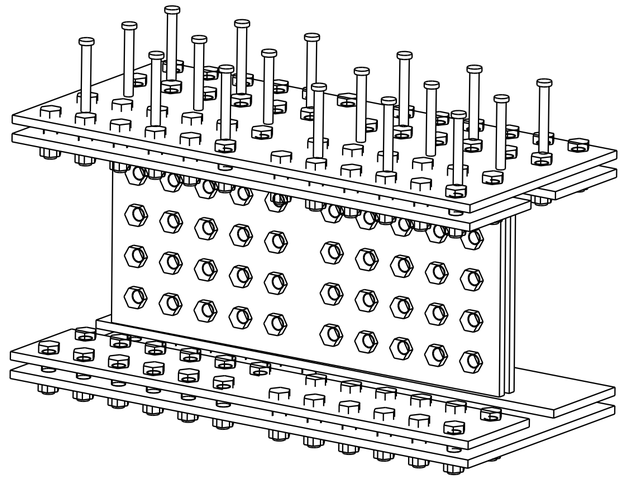

3D VIEW
1:10

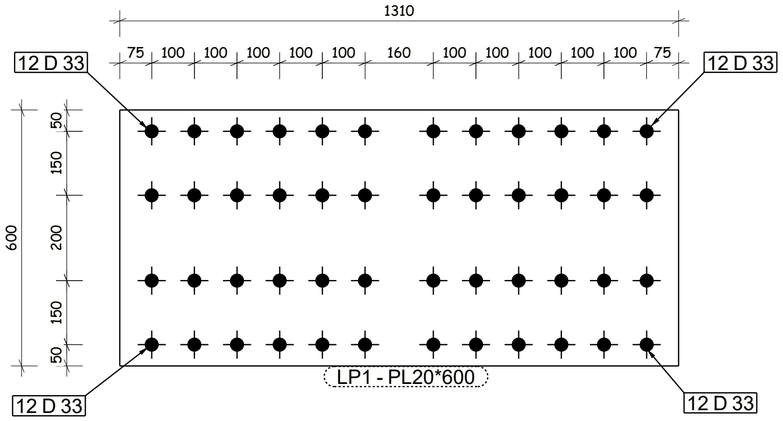

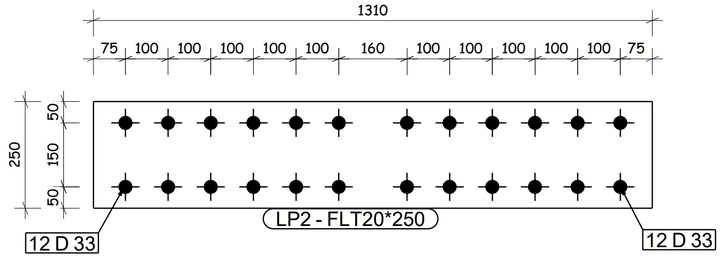

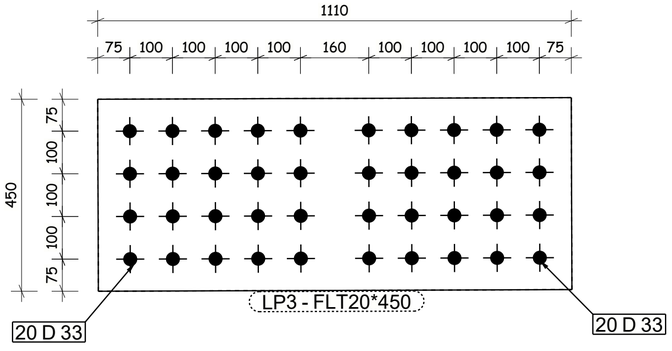

GENERAL NOTES:

1. ALL DIMENSIONS ARE IN MILLIMETERS UNLESS OTHERWISE SPECIFIED.
2. LEVELS ARE IN METERS
3. DESIGN SERVICE LIFE OF 100 YEARS.
4. FLANGES OF TOP AND BOTTOM CHORDS TO BE SUPPLIED WITH IMPROVED THROUGH THICKNESS PROPERTIES Z25 ACCORDING TO EN10164.

REFERENCE DRAWINGS

1	93M-0407-SEN-6OL11-END-10118-B PAGE 01:17
2	
3	
4	
5	
6	
7	
8	
9	
10	
11	

6TH OF OCTOBER CITY RAIL TRANSIT MONORAIL &
NEW CAPITAL CITY RAIL TRANSIT MONORAIL

The Authority — Hill International — Authority Consultant
Main Contractor: ORASCOM CONSTRUCTION
BOMBARDIER
Designer: SENER / SHAKER CONSULTANCY GROUP

CONTRACTOR CONSULTANT:
ENGINEERING HOUSE FOR CONSULTANCY

6 October Monorail
Engineering Unit
Valid For Construction

REV	DATE	BY	DESCRIPTION	CHK	APD
A	20-11-24	M.SH	ISSUE FOR APPROVAL	A.SH	M.M

SCALE: AS SHOWN | SHOP DRAWING | DATE: 20.11.2024

DRAWING TITLE:
6TH OF OCTOBER MONORAIL
SHOP DRAWING FOR BRIDGE 6OL11-37
STEEL TRUSS (I).
SPLICE.1

Project Code	Rubric	Initiator	Lot	Ref	Number	Revision
93M	0407	ACC	60L11	DWG	90029	A

Tekla structures

-Drawing shall be updated according to the comments on the GA drawing.
-Approval is subjected to the approval of coordination package between multi-discipline.

REVIEWED WITH COMMENT MONORAILS PROJECT

ERECTION MARK :	LP39					QTY : 1	NOS
POS NO.	QTY PER ASSLY	SECTION	LENGTH	UNIT WEIGHT (Kg)	TOTAL QTY	TOTAL WEIGHT	GRADE
LP4	1	PL35*710	1710	334	1	334.0	S355J2N
LP4	1	PL35*710.0	1710	334	1	334.0	S355J2N
LP5	4	PL35*300.0	1710	141	4	564.0	S355J2N
LP6	2	PL20*350.0	1110	61	2	122.0	S355J2N
				TOTAL WEIGHT :-		1354.0	

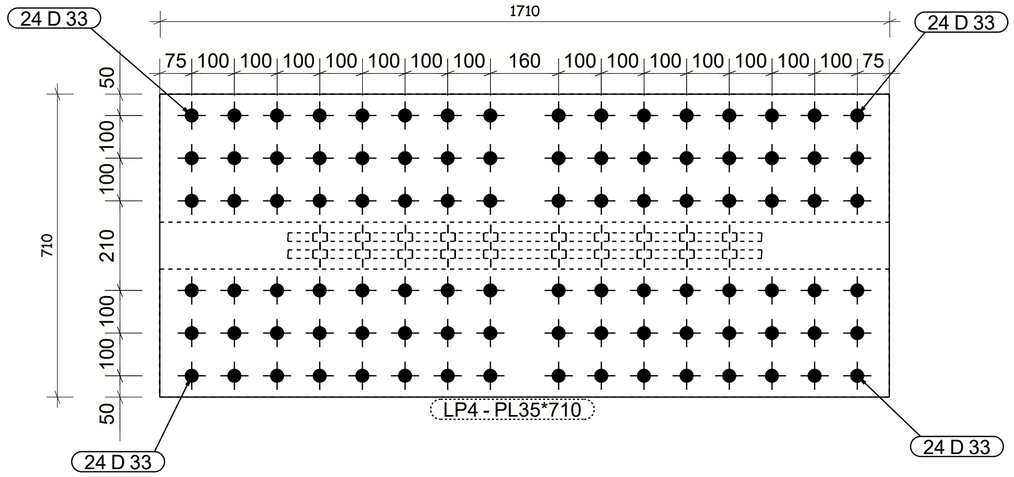

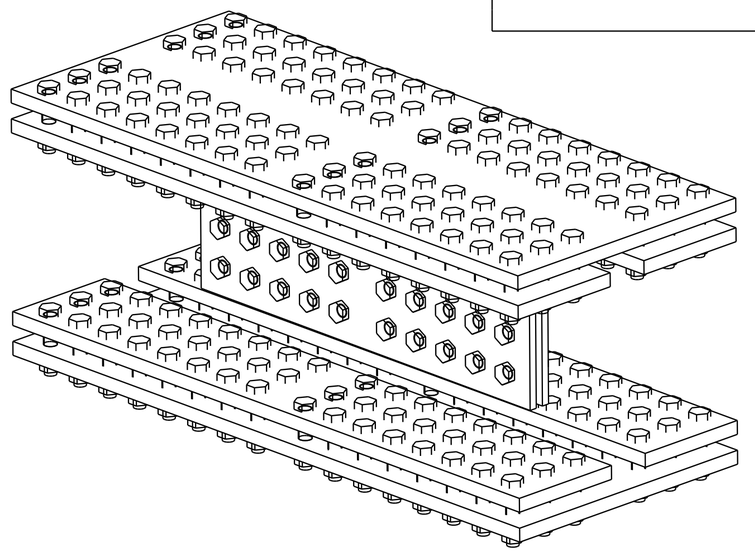

3D VIEW

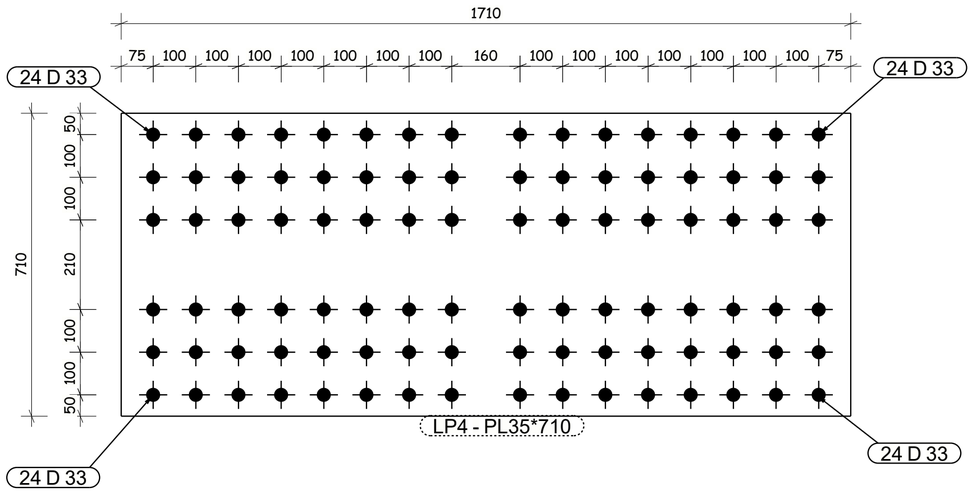

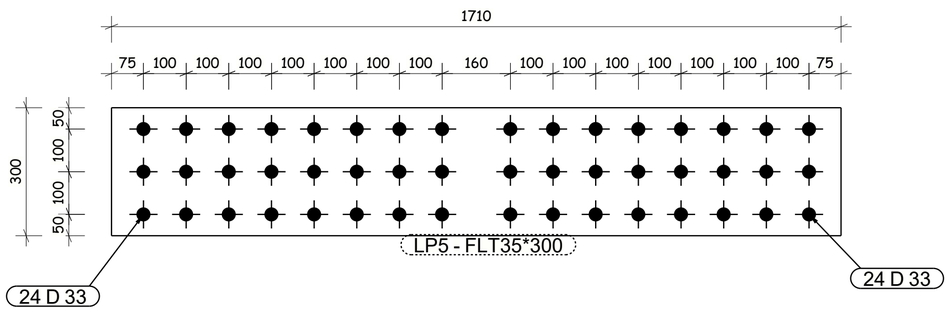

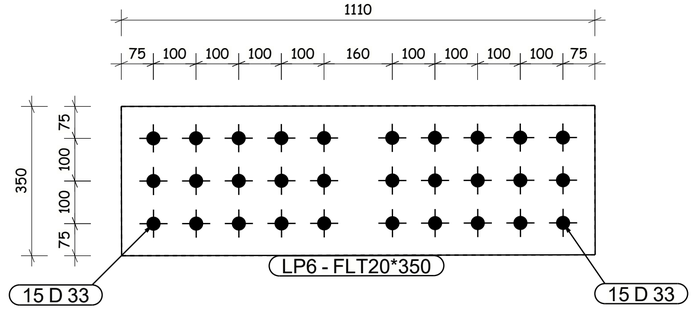

GENERAL NOTES:

1. ALL DIMENSIONS ARE IN MILLIMETERS UNLESS OTHERWISE SPECIFIED.
2. LEVELS ARE IN METERS
3. DESIGN SERVICE LIFE OF 100 YEARS.
4. FLANGES OF TOP AND BOTTOM CHORDS TO BE SUPPLIED WITH IMPROVED THROUGH THICKNESS PROPERTIES Z25 ACCORDING TO EN10164.

REFERENCE DRAWINGS

1	93M-0407-SEN-6OL11-END-10118-B PAGE 01:17
2	
3	
4	
5	
6	
7	
8	
9	
10	
11	

6TH OF OCTOBER CITY RAIL TRANSIT MONORAIL & NEW CAPITAL CITY RAIL TRANSIT MONORAIL

وزارة النقل MINISTRY OF TRANSPORT
The Authority
Hill International
Authority Consultant

ORASCOM CONSTRUCTION
BOMBARDIER
Main Contractor

SENER
SHAKER CONSULTANCY GROUP
Designer

CONTRACTOR CONSULTANT:
ENGINEERING HOUSE FOR CONSULTANCY

6 October Monorail Engineering Unit
Valid For Construction

SCALE	SHOPDRAWING	DATE
AS SHOWN		20.11.2024

REV	DATE	BY	DESCRIPTION	CHK	APD
A	20-11-24	M.SH	ISSUE FOR APPROVAL	A.SH	M.M

DRAWING TITLE:
6TH OF OCTOBER MONORAIL
SHOP DRAWING FOR BRIDGE 6OL11-37
STEEL TRUSS (I).
SPLICE.2

Project Code	Rubric	Initiator	Lot	Ref	Number	Revision
9 3 M	0 4 0 7	A C C	6 0 L 1 1	D W G	90030	A

Tekla structures

ERECTION MARK :	LP40					QTY : 1 NOS	
POS NO.	QTY PER ASSLY	SECTION	LENGTH	UNIT WEIGHT (Kg)	TOTAL QTY	TOTAL WEIGHT	GRADE
LP24	1	PL15*370	570	25	1	25.0	S355J2N
LP24	1	PL15*370.0	570	25	1	25.0	S355J2N
LP25	2	PL15*160.0	570	11	2	22.0	S355J2N
LP26	2	PL15*166.0	570	11	2	22.0	S355J2N
LP27	2	PL10*280.0	410	9	2	18.0	S355J2N
				TOTAL WEIGHT :		112.0	

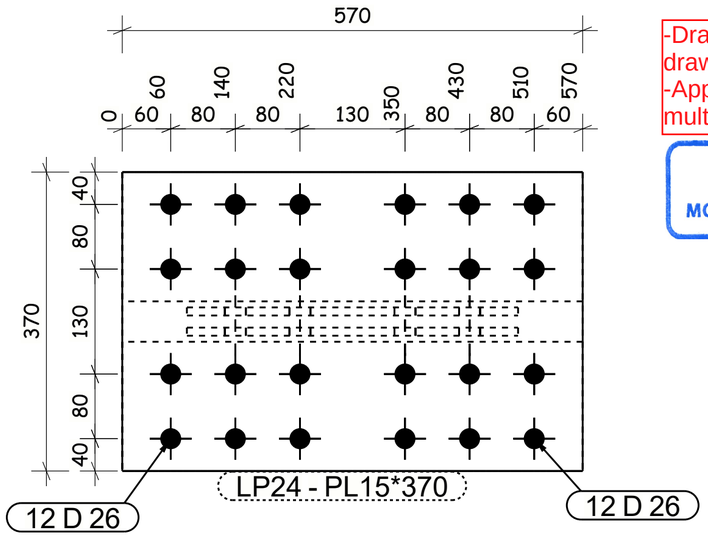

-Drawing shall be updated according to the comments on the GA drawing.
-Approval is subjected to the approval of coordination package between multi-discipline.

REVIEWED WITH COMMENT
MONORAILS PROJECT

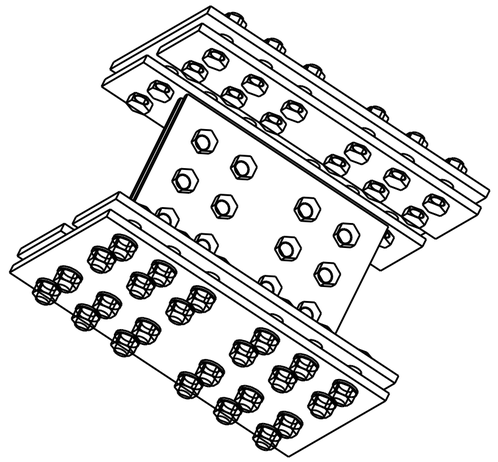

3D VIEW
1:10

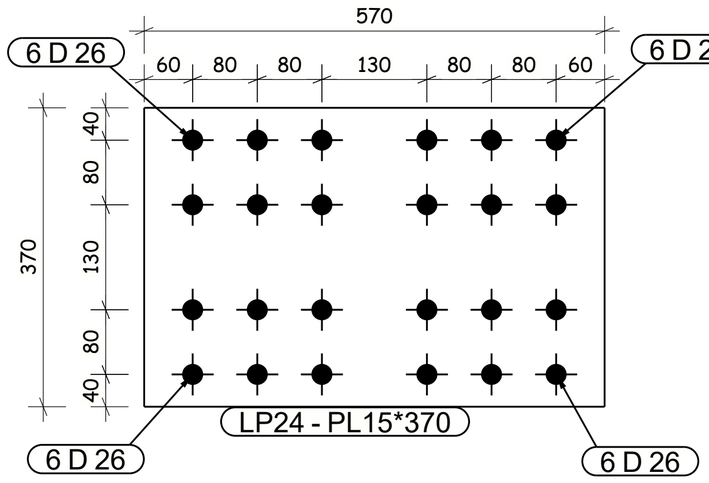

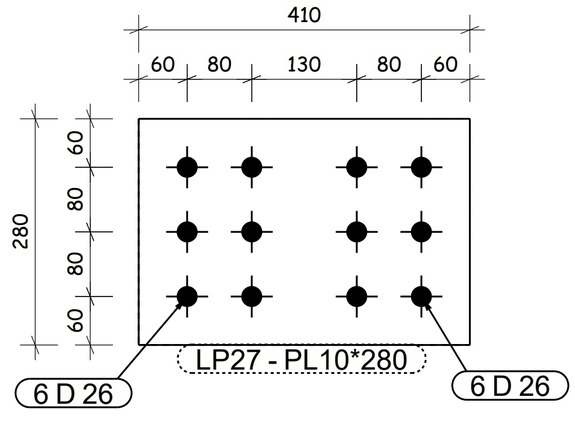

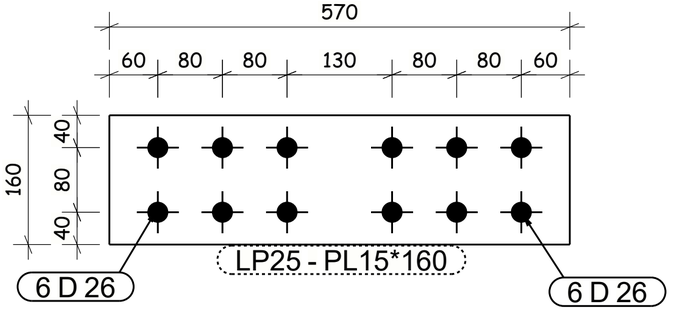

GENERAL NOTES:

1. ALL DIMENSIONS ARE IN MILLIMETERS UNLESS OTHERWISE SPECIFIED.
2. LEVELS ARE IN METERS
3. DESIGN SERVICE LIFE OF 100 YEARS.
4. FLANGES OF TOP AND BOTTOM CHORDS TO BE SUPPLIED WITH IMPROVED THROUGH THICKNESS PROPERTIES Z25 ACCORDING TO EN10164.

REFERENCE DRAWINGS

1	93M-0407-SEN-6OL11-END-10118-B PAGE 01:17
2	
3	
4	
5	
6	
7	
8	
9	
10	
11	

6TH OF OCTOBER CITY RAIL TRANSIT MONORAIL &
NEW CAPITAL CITY RAIL TRANSIT MONORAIL

The Authority — Hill International Authority Consultant

ORASCOM CONSTRUCTION — BOMBARDIER — Main Contractor

SENER — SHAKER CONSULTANCY GROUP — Designer

CONTRACTOR
CONSULTANT
ENGINEERING HOUSE FOR CONSULTANCY

6 October Monorail
Engineering Unit
Valid For Construction

REV	DATE	BY	DESCRIPTION	CHK	APD
A	20-11-24	M.SH	ISSUE FOR APPROVAL	A.SH	M.M

SCALE: AS SHOWN | SHOP DRAWING | DATE: 20.11.2024

DRAWING TITLE:
6TH OF OCTOBER MONORAIL
SHOP DRAWING FOR BRIDGE 6OL11-37
STEEL TRUSS (I).
SPLICE.3

Project Code	Rubric	Initiator	Lot	Ref	Number	Revision
9 3 M	0 4 0 7	A C C	6 0 L 1 1	D W G	90031	A

Tekla structures

-Drawing shall be updated according to the comments on the GA drawing.
-Approval is subjected to the approval of coordination package between multi-discipline.

REVIEWED WITH COMMENT
MONORAILS PROJECT

ERECTION MARK :	LP41					QTY : 1 NOS	
POS NO.	QTY PER ASSLY	SECTION	LENGTH	UNIT WEIGHT (Kg)	TOTAL QTY	TOTAL WEIGHT	GRADE
LP29	1	PL15*240	730	21	1	21.0	S355J2N
LP29	1	PL15*240.0	730	21	1	21.0	S355J2N
LP30	4	PL15*90.0	730	8	4	32.0	S355J2N
LP31	2	PL10*440.0	570	20	2	40.0	S355J2N
				TOTAL WEIGHT :		114.0	

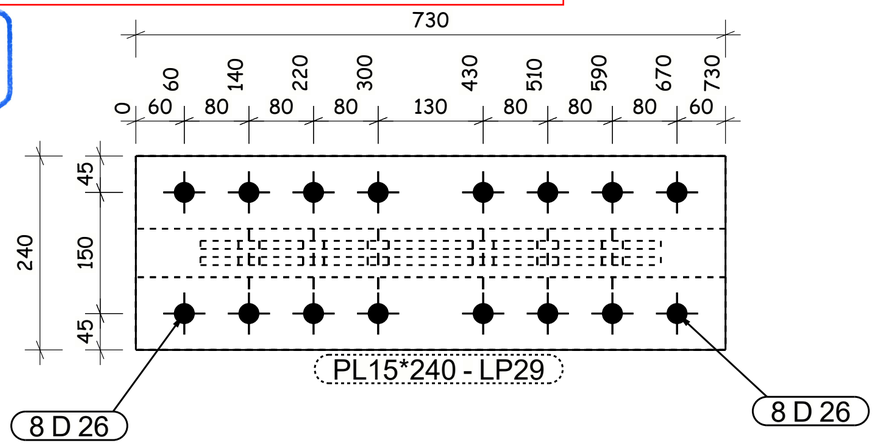

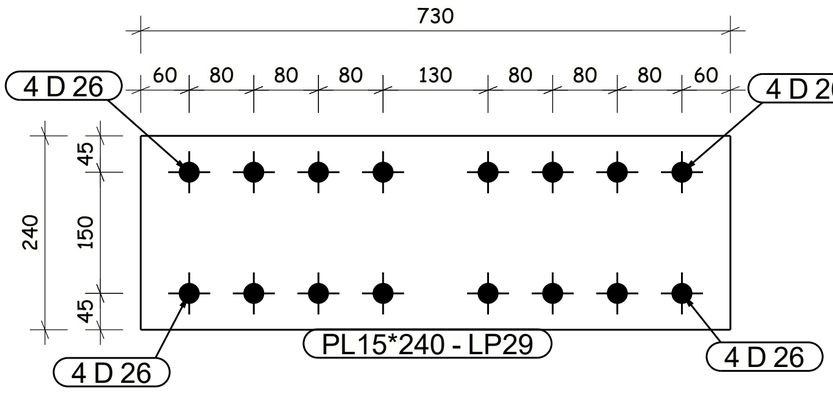

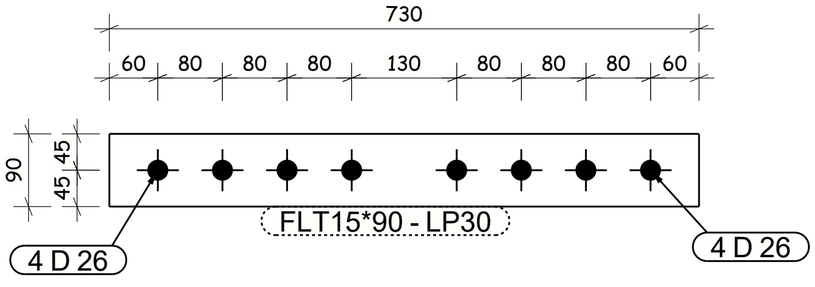

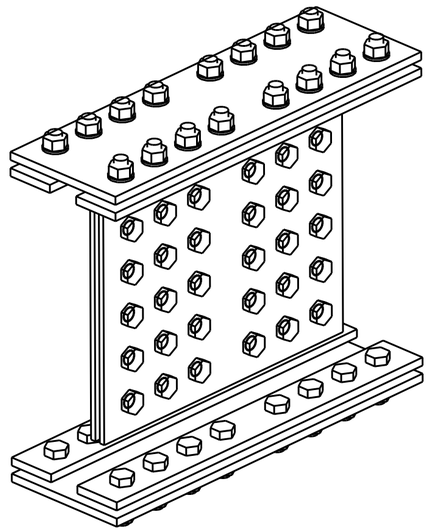

3D VIEW

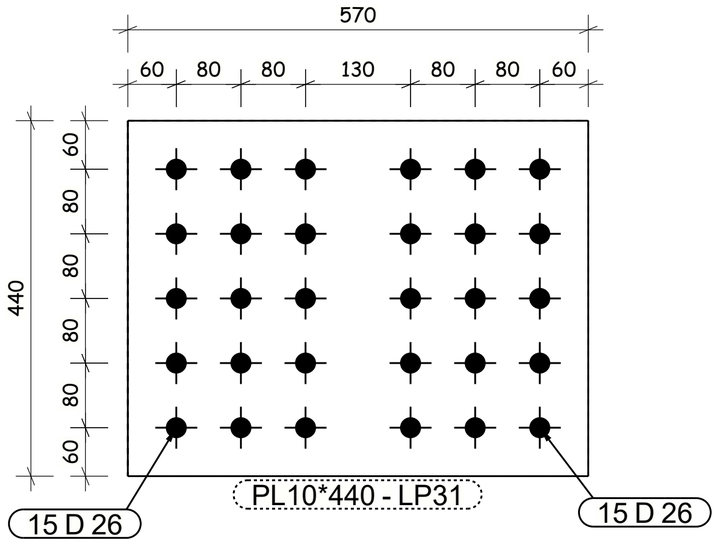

GENERAL NOTES:

1. ALL DIMENSIONS ARE IN MILLIMETERS UNLESS OTHERWISE SPECIFIED.
2. LEVELS ARE IN METERS
3. DESIGN SERVICE LIFE OF 100 YEARS.
4. FLANGES OF TOP AND BOTTOM CHORDS TO BE SUPPLIED WITH IMPROVED THROUGH THICKNESS PROPERTIES Z25 ACCORDING TO EN10164.

REFERENCE DRAWINGS

1	93M-0407-SEN-6OL11-END-10118-B PAGE 01:17
2	
3	
4	
5	
6	
7	
8	
9	
10	
11	

6TH OF OCTOBER CITY RAIL TRANSIT MONORAIL &
NEW CAPITAL CITY RAIL TRANSIT MONORAIL

The Authority — Hill International Authority Consultant — Main Contractor — Designer

CONTRACTOR
CONSULTANT
ENGINEERING HOUSE FOR CONSULTANCY

SCALE: AS SHOWN | SHOP DRAWING | DATE: 20.11.2024

REV	DATE	BY	DESCRIPTION	CHK	APD
A	20-11-24	M.SH	ISSUE FOR APPROVAL	A.SH	M.M

6 October Monorail
Engineering Unit
Valid For Construction

DRAWING TITLE:
6TH OF OCTOBER MONORAIL
SHOP DRAWING FOR BRIDGE 6OL11-37
STEEL TRUSS (I).
SPLICE.4

Project Code	Rubric	Initiator	Lot	Ref	Number	Revision
9 3 M	0 4 0 7	A C C	6 0 L	1 1	D W G	90032	A

Tekla structures

-Drawing shall be updated according to the comments on the GA drawing.
-Approval is subjected to the approval of coordination package between multi-discipline.

REVIEWED WITH COMMENT
MONORAILS PROJECT

ERECTION MARK :	LP42					QTY : 1 NOS	
POS NO.	QTY PER ASSLY	SECTION	LENGTH	UNIT WEIGHT (Kg)	TOTAL QTY	TOTAL WEIGHT	GRADE
LP29	1	PL15*240	730	21	1	21.0	S355J2N
LP29	1	PL15*240.0	730	21	1	21.0	S355J2N
LP30	4	PL15*90.0	730	8	4	32.0	S355J2N
LP31	2	PL10*440.0	570	20	2	40.0	S355J2N
				TOTAL WEIGHT :		114.0	

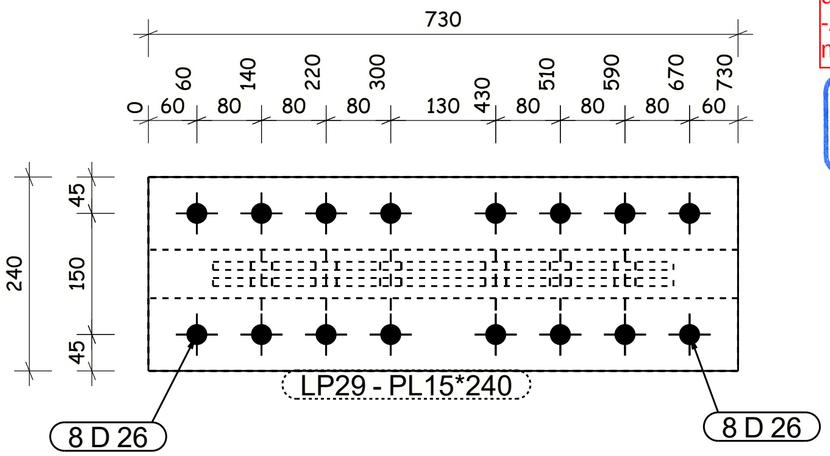

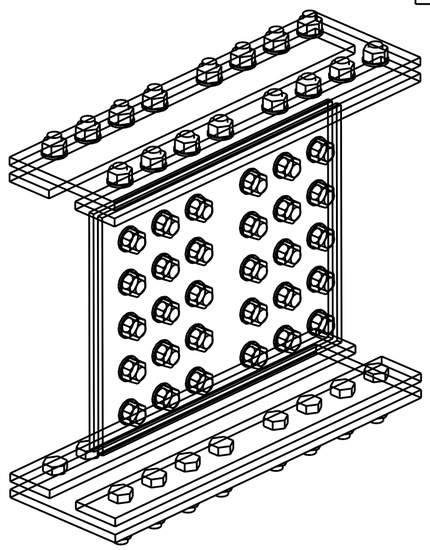

3D VIEW

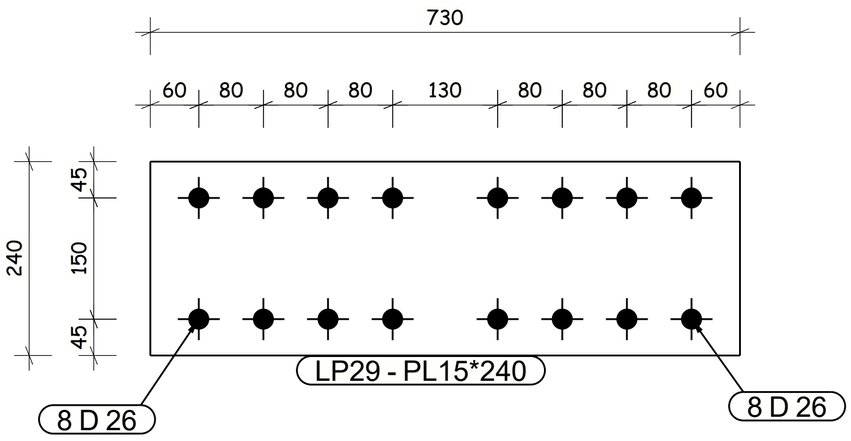

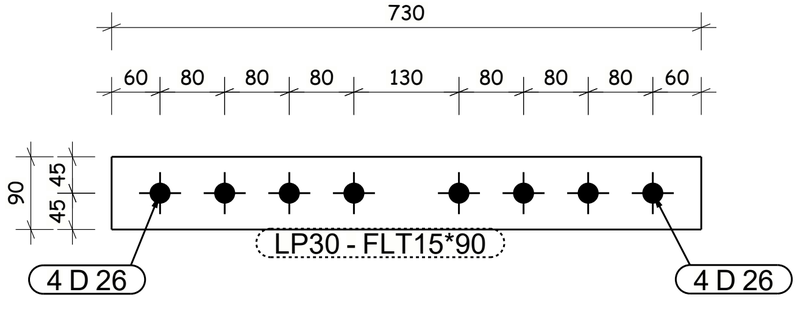

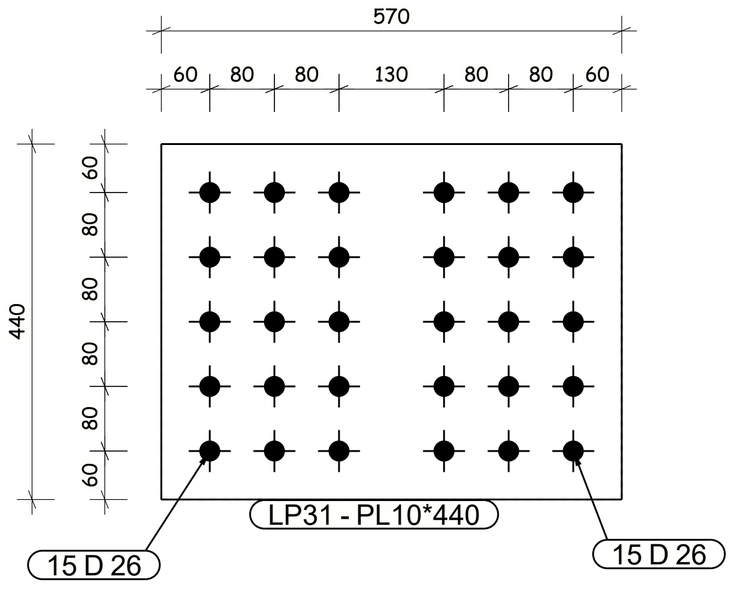

GENERAL NOTES:

1. ALL DIMENSIONS ARE IN MILLIMETERS UNLESS OTHERWISE SPECIFIED.
2. LEVELS ARE IN METERS
3. DESIGN SERVICE LIFE OF 100 YEARS.
4. FLANGES OF TOP AND BOTTOM CHORDS TO BE SUPPLIED WITH IMPROVED THROUGH THICKNESS PROPERTIES Z25 ACCORDING TO EN10164.

REFERENCE DRAWINGS

1	93M-0407-SEN-6OL11-END-10118-B PAGE 01:17
2	
3	
4	
5	
6	
7	
8	
9	
10	
11	

6TH OF OCTOBER CITY RAIL TRANSIT MONORAIL &
NEW CAPITAL CITY RAIL TRANSIT MONORAIL

The Authority — Hill International Authority Consultant

ORASCOM CONSTRUCTION — BOMBARDIER — Main Contractor

SENER — SHAKER CONSULTING GROUP — Designer

CONTRACTOR :
CONSULTANT :

ENGINEERING HOUSE FOR CONSULTANCY

6 October Monorail
Engineering Unit
Valid For Construction

SCALE	SHOP DRAWING	DATE
AS SHOWN		20.11.2024

REV	DATE	BY	DESCRIPTION	CHK	APD
A	20-11-24	M.SH	ISSUE FOR APPROVAL	A.SH	M.M

DRAWING TITLE:
6TH OF OCTOBER MONORAIL
SHOP DRAWING FOR BRIDGE 6OL11-37
STEEL TRUSS (I).
SPLICE.5

Project Code	Rubric	Initiator	Lot	Ref	Number	Revision
9 3 M	0 4 0 7	A C C	6 0 L 1 1	D W G	90033	A

Tekla structures

All holes are 22mm U.N.O Length & Area & Weight per piece

Mark	Profile	Grade	QTY	Length	Area	Weight
1001	FLT25*400	S355J2N	4	800.0	0.41	34.9

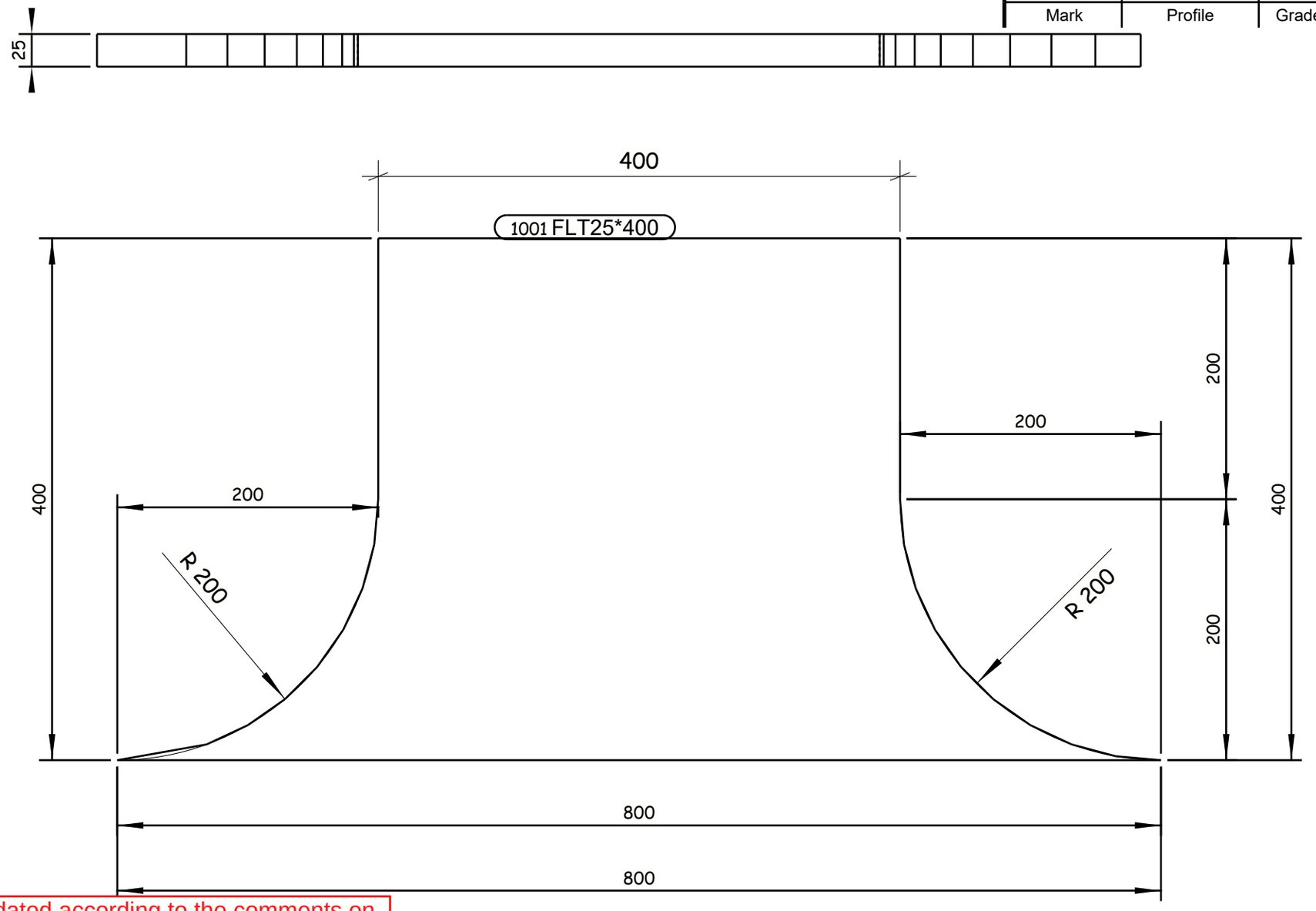

-Drawing shall be updated according to the comments on the GA drawing.
-Approval is subjected to the approval of coordination package between multi-discipline.

REVIEWED WITH COMMENT MONORAILS PROJECT

4 REQUIRED AS DRAWN E.SH 1001

6 October Monorail Engineering Unit
Valid For Construction

Tekla structures

GENERAL NOTES:

1. ALL DIMENSIONS ARE IN MILLIMETERS UNLESS OTHERWISE SPECIFIED.
2. LEVELS ARE IN METERS
3. DESIGN SERVICE LIFE OF 100 YEARS.
4. FLANGES OF TOP AND BOTTOM CHORDS TO BE SUPPLIED WITH IMPROVED THROUGH THICKNESS PROPERTIES Z25 ACCORDING TO EN10164.

REFERENCE DRAWINGS

1	93M-0407-SEN-6OL11-END-10118-B PAGE 01:17
2	
3	
4	
5	
6	
7	
8	
9	
10	
11	

6TH OF OCTOBER CITY RAIL TRANSIT MONORAIL &
NEW CAPITAL CITY RAIL TRANSIT MONORAIL

The Authority — Authority Consultant
Main Contractor
Designer

CONTRACTOR / CONSULTANT:
ENGINEERING HOUSE FOR CONSULTANCY

SCALE	SHD/DRAWING	DATE
AS SHOWN		20.11.2024

REV	DATE	BY	DESCRIPTION	CHK	APD
A	20-11-24	M.SH	ISSUE FOR APPROVAL	A.SH	M.M

DRAWING TITLE:
6TH OF OCTOBER MONORAIL
SHOP DRAWING FOR BRIDGE 6OL11-37
STEEL TRUSS (I).
1001

Project Code	Rubric	Initiator	Lot	Ref	Number	Revision
93M	0407	ACC	6OL11	DWG	90034	A

-Drawing shall be updated according to the comments on the GA drawing.
-Approval is subjected to the approval of coordination package between multi-discipline.

REVIEWED WITH COMMENT
MONORAILS PROJECT

All holes are 22mm U.N.O Length & Area & Weight per piece

Mark	Profile	Grade	QTY	Length	Area	Weight
1002	FLT25*400	S355J2N	8	687.5	0.34	28.7

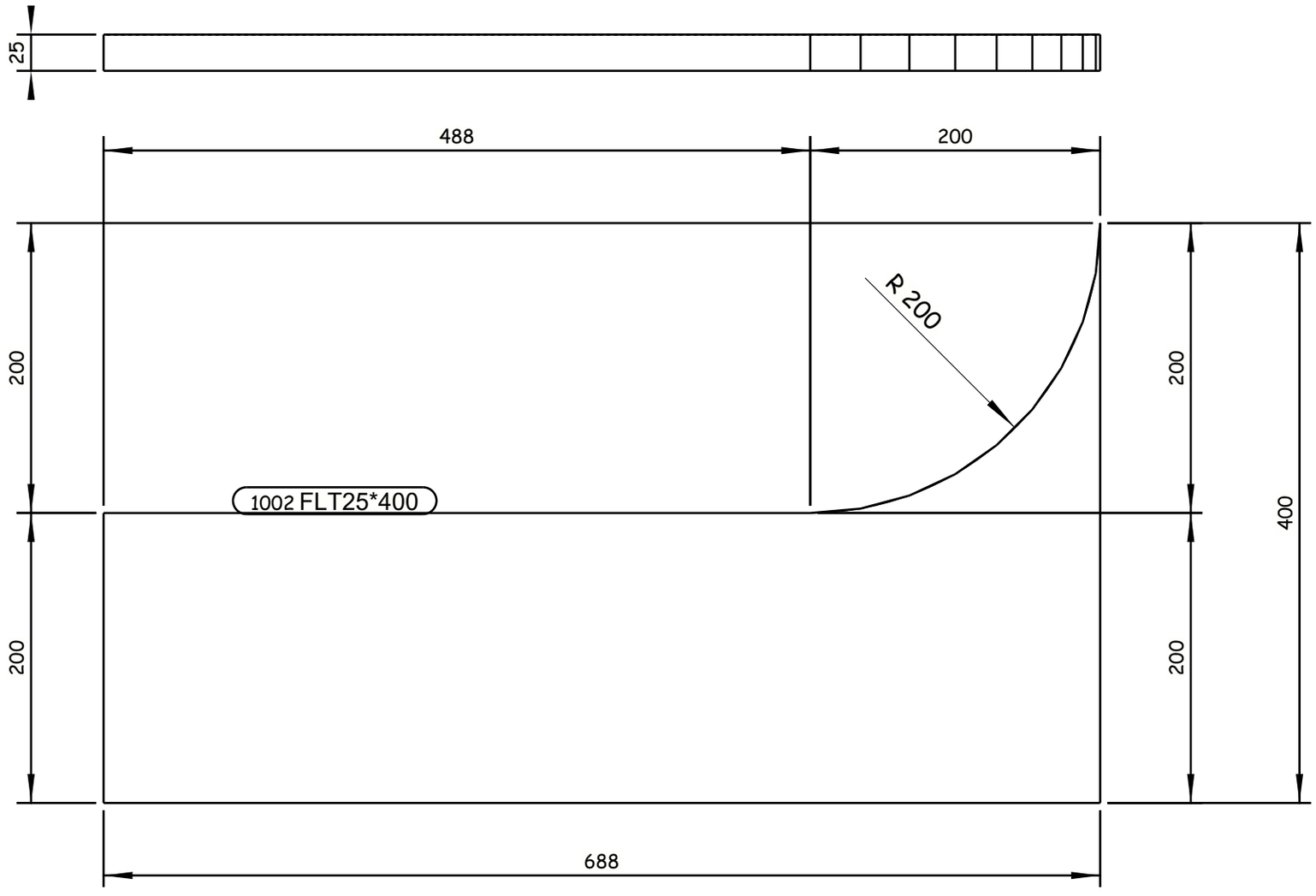

8 REQUIRED AS DRAWN E.SH 1002

Tekla structures

GENERAL NOTES:

1. ALL DIMENSIONS ARE IN MILLIMETERS UNLESS OTHERWISE SPECIFIED.
2. LEVELS ARE IN METERS
3. DESIGN SERVICE LIFE OF 100 YEARS.
4. FLANGES OF TOP AND BOTTOM CHORDS TO BE SUPPLIED WITH IMPROVED THROUGH THICKNESS PROPERTIES Z25 ACCORDING TO EN10164.

REFERENCE DRAWINGS

1	93M-0407-SEN-6OL11-END-10118-B PAGE 01:17
2	
3	
4	
5	
6	
7	
8	
9	
10	
11	

6TH OF OCTOBER CITY RAIL TRANSIT MONORAIL &
NEW CAPITAL CITY RAIL TRANSIT MONORAIL

The Authority
Hill International
Authority Consultant

ORASCOM CONSTRUCTION
Main Contractor

BOMBARDIER
SENER
SHAKER CONSULTANCY GROUP
Designer

CONTRACTOR:
CONSULTANT:

ENGINEERING HOUSE FOR CONSULTANCY

6 October Monorail
Engineering Unit
Valid For Construction

SCALE	CHK'D DRAWING	DATE
AS SHOWN		20.11.2024

REV	DATE	BY	DESCRIPTION	CHK	APD
A	20-11-24	M.SH	ISSUE FOR APPROVAL	A.SH	M.M

DRAWING TITLE:
6TH OF OCTOBER MONORAIL
SHOP DRAWING FOR BRIDGE 6OL11-37
STEEL TRUSS (I).
1002

Project Code	Rubric	Initiator	Lot	Ref	Number	Revision
93M	0407	ACC	60L11	DWG	90035	A

-Drawing shall be updated according to the comments on the GA drawing.
-Approval is subjected to the approval of coordination package between multi-discipline.

REVIEWED WITH COMMENT
MONORAILS PROJECT

All holes are 22mm U.N.O Length & Area & Weight per piece

Mark	Profile	Grade	QTY	Length	Area	Weight
FL1	FLT20*400	S355J2N	4	3000.0	2.54	188.4

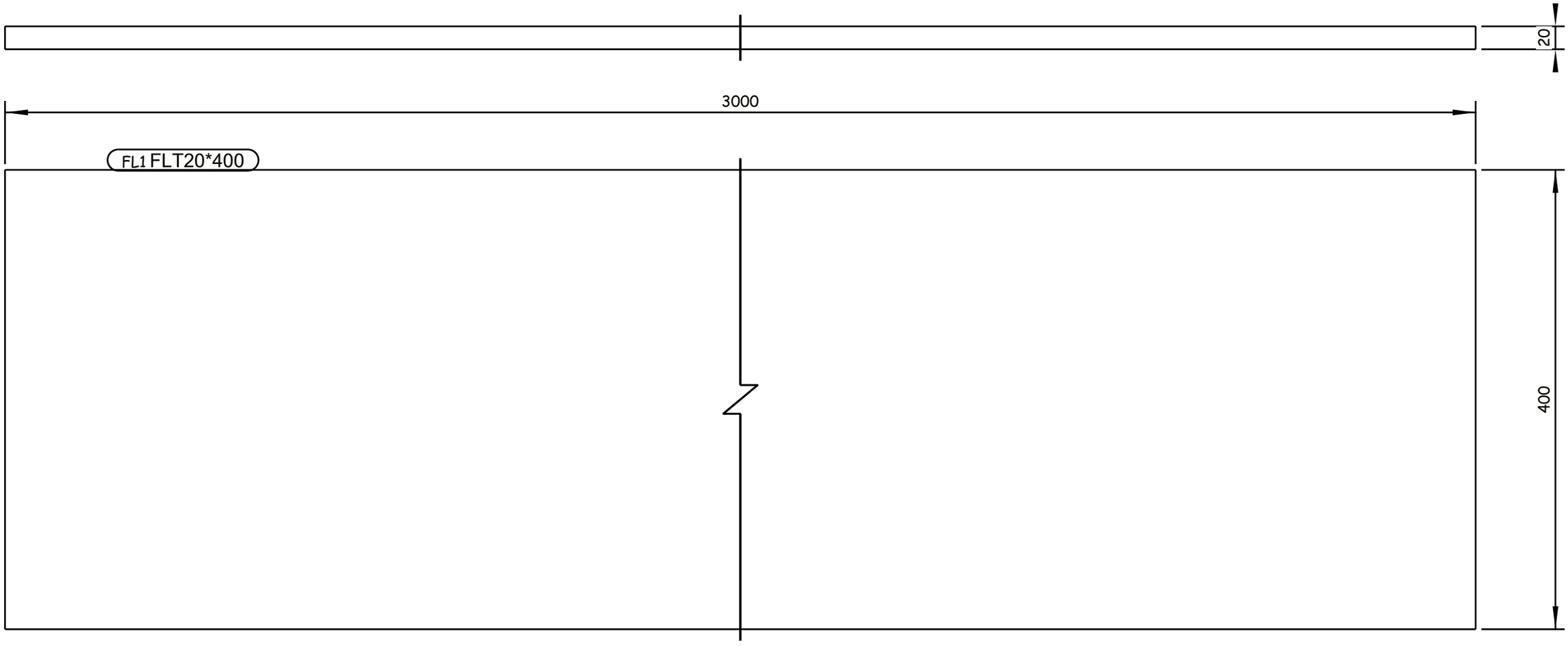

4 REQUIRED AS DRAWN E.SH FL1

GENERAL NOTES:

1. ALL DIMENSIONS ARE IN MILLIMETERS UNLESS OTHERWISE SPECIFIED.
2. LEVELS ARE IN METERS
3. DESIGN SERVICE LIFE OF 100 YEARS.
4. FLANGES OF TOP AND BOTTOM CHORDS TO BE SUPPLIED WITH IMPROVED THROUGH THICKNESS PROPERTIES Z25 ACCORDING TO EN10164.

REFERENCE DRAWINGS

1	93M-0407-SEN-6OL11-END-10118-B PAGE 01:17
2	
3	
4	
5	
6	
7	
8	
9	
10	
11	

6TH OF OCTOBER CITY RAIL TRANSIT MONORAIL &
NEW CAPITAL CITY RAIL TRANSIT MONORAIL

The Authority
Hill International
Authority Consultant

ORASCOM CONSTRUCTION
Main Contractor

BOMBARDIER
SENER
SHAKER CONSULTANCY GROUP
Designer

CONTRACTOR / CONSULTANT:
ENGINEERING HOUSE FOR CONSULTANCY

6 October Monorail
Engineering Unit
Valid For Construction

SCALE	CHK'D DRAWING	DATE
AS SHOWN		20.11.2024

REV	DATE	BY	DESCRIPTION	CHK	APD
A	20-11-24	M.SH	ISSUE FOR APPROVAL	A.SH	M.M

DRAWING TITLE:
6TH OF OCTOBER MONORAIL
SHOP DRAWING FOR BRIDGE 6OL11-37
STEEL TRUSS (I).
FL1

Project Code	Rubric	Initiator	Lot	Ref	Number	Revision
93M	0407	ACC	6OL11	DWG	90036	A

Tekla structures

-Drawing shall be updated according to the comments on the GA drawing.
-Approval is subjected to the approval of coordination package between multi-discipline.

REVIEWED WITH COMMENT
MONORAILS PROJECT

All holes are 22mm U.N.O Length & Area & Weight per piece

Mark	Profile	Grade	QTY	Length	Area	Weight
FL2	PL20*700	S355J2N	8	800.0	0.65	46.7

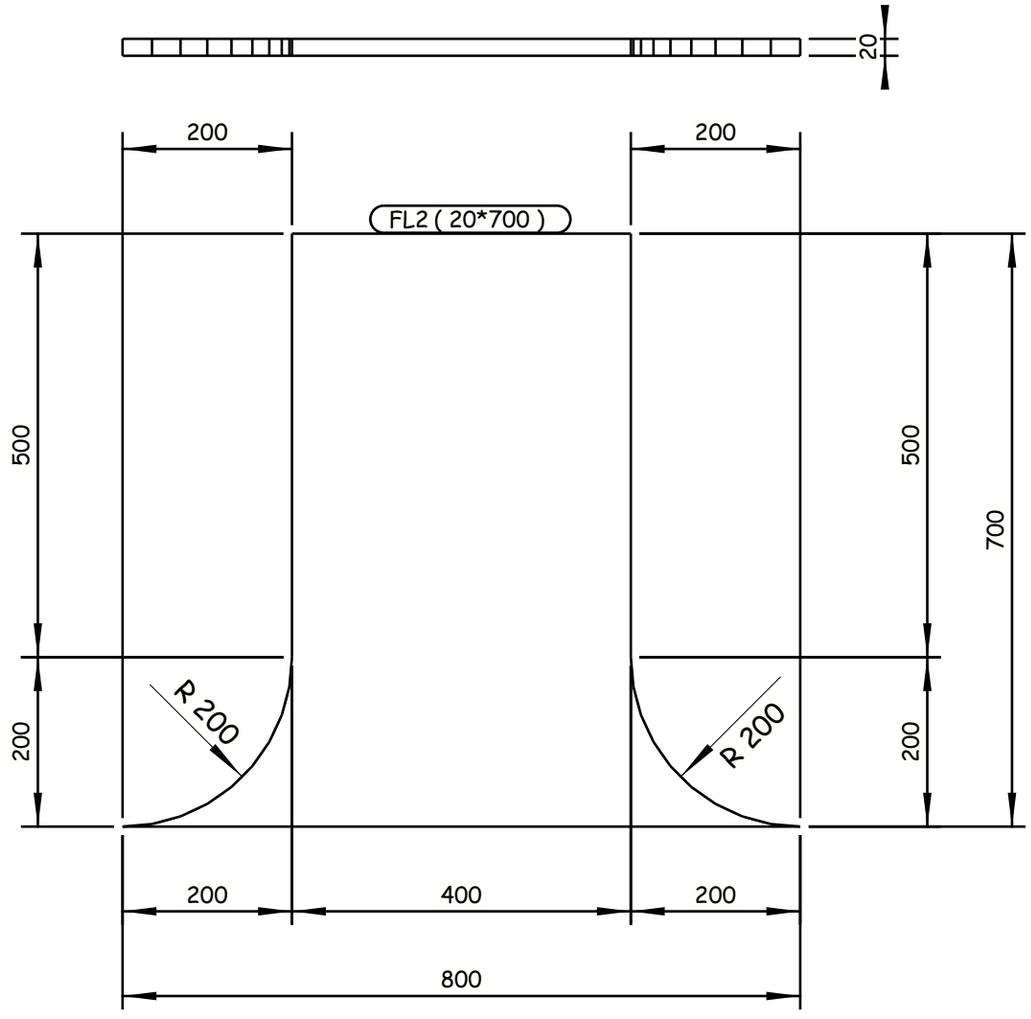

8 REQUIRED AS DRAWN E.SH FL2

Tekla structures

GENERAL NOTES:

1. ALL DIMENSIONS ARE IN MILLIMETERS UNLESS OTHERWISE SPECIFIED.
2. LEVELS ARE IN METERS
3. DESIGN SERVICE LIFE OF 100 YEARS.
4. FLANGES OF TOP AND BOTTOM CHORDS TO BE SUPPLIED WITH IMPROVED THROUGH THICKNESS PROPERTIES Z25 ACCORDING TO EN10164.

REFERENCE DRAWINGS

1	93M-0407-SEN-6OL11-END-10118-B PAGE 01:17
2	
3	
4	
5	
6	
7	
8	
9	
10	
11	

6TH OF OCTOBER CITY RAIL TRANSIT MONORAIL &
NEW CAPITAL CITY RAIL TRANSIT MONORAIL

The Authority
Hill International
Authority Consultant

ORASCOM CONSTRUCTION
Main Contractor

BOMBARDIER
SENER
SHAKER CONSULTANCY GROUP
Designer

CONTRACTOR & CONSULTANT:
ENGINEERING HOUSE FOR CONSULTANCY

SCALE: AS SHOWN | CHK'D DRAWING | DATE: 20.11.2024

REV	DATE	BY	DESCRIPTION	CHK	APD
A	20-11-24	M.SH	ISSUE FOR APPROVAL	A.SH	M.M

6 October Monorail
Engineering Unit
Valid For Construction

DRAWING TITLE:
6TH OF OCTOBER MONORAIL
SHOP DRAWING FOR BRIDGE 6OL11-37
STEEL TRUSS (I).
FL2

Project Code	Rubric	Initiator	Lot	Ref	Number	Revision
93M	0407	ACC	60L11	DWG	90037	A

-Drawing shall be updated according to the comments on the GA drawing.
-Approval is subjected to the approval of coordination package between multi-discipline.

REVIEWED WITH COMMENT
MONORAILS PROJECT

All holes are 22mm U.N.O Length & Area & Weight per piece

Mark	Profile	Grade	QTY	Length	Area	Weight
FP1	FLT20*400	S355J2N	4	4026.3	3.33	242.6

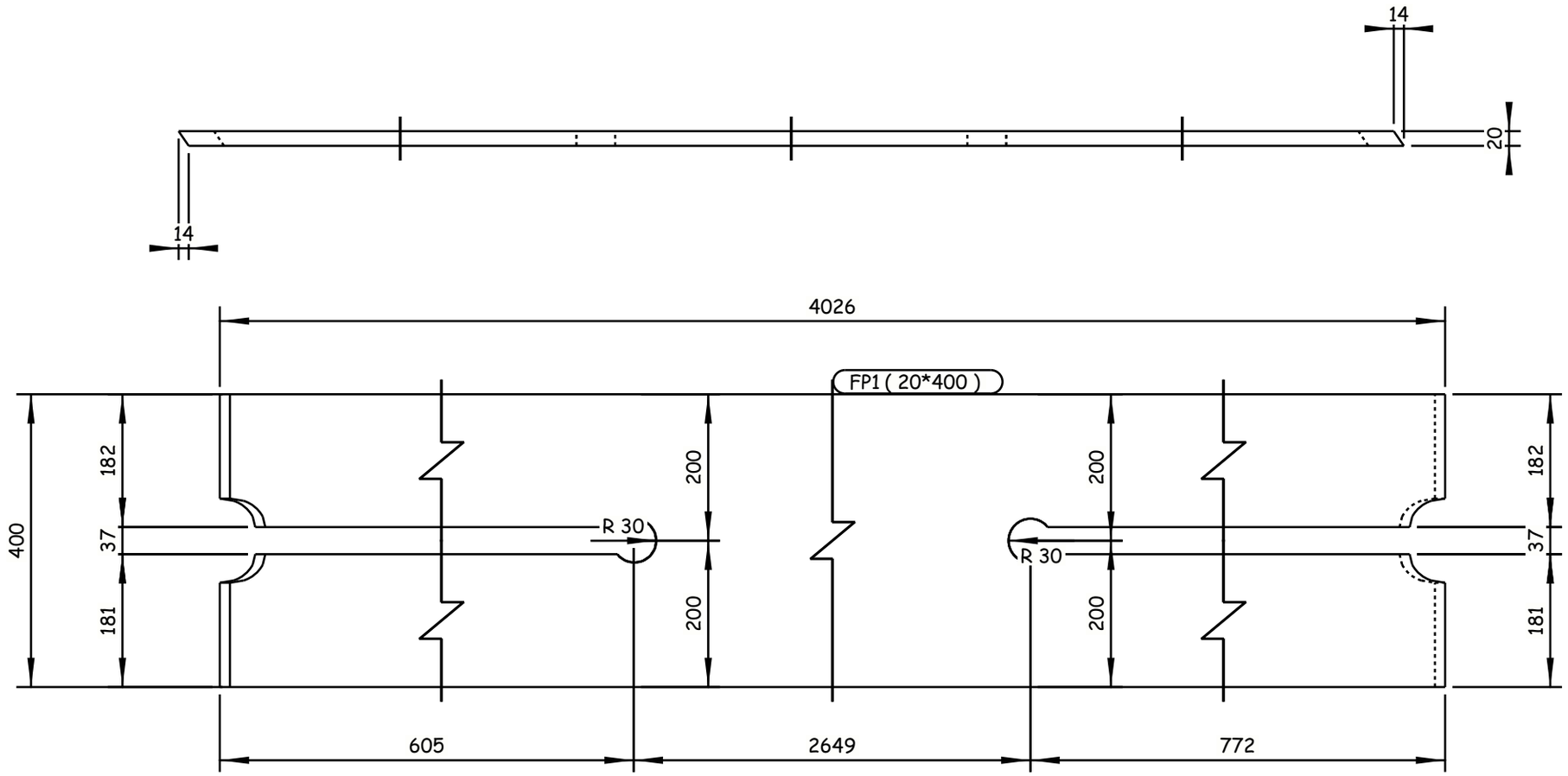

4 REQUIRED AS DRAWN E.SH FP1

Tekla structures

GENERAL NOTES:

1. ALL DIMENSIONS ARE IN MILLIMETERS UNLESS OTHERWISE SPECIFIED.
2. LEVELS ARE IN METERS
3. DESIGN SERVICE LIFE OF 100 YEARS.
4. FLANGES OF TOP AND BOTTOM CHORDS TO BE SUPPLIED WITH IMPROVED THROUGH THICKNESS PROPERTIES Z25 ACCORDING TO EN10164.

REFERENCE DRAWINGS

1	93M-0407-SEN-6OL11-END-10118-B PAGE 01:17
2	
3	
4	
5	
6	
7	
8	
9	
10	
11	

6TH OF OCTOBER CITY RAIL TRANSIT MONORAIL &
NEW CAPITAL CITY RAIL TRANSIT MONORAIL

The Authority
Hill International
Authority Consultant
ORASCOM CONSTRUCTION
Main Contractor
BOMBARDIER
SENER
SHAKER
Designer

CONTRACTOR
CONSULTANT :
ENGINEERING HOUSE FOR CONSULTANCY

6 October Monorail
Engineering Unit
Valid For Construction

SCALE	CHD/DRWING	DATE
AS SHOWN		20.11.2024

REV	DATE	BY	DESCRIPTION	CHK	APD
A	20-11-24	M.SH	ISSUE FOR APPROVAL	A.SH	M.M

DRAWING TITLE:
6TH OF OCTOBER MONORAIL
SHOP DRAWING FOR BRIDGE 6OL11-37
STEEL TRUSS (I).
FP1

Project Code	Rubric	Initiator	Lot	Ref	Number	Revision
93M	0407	ACC	6OL11	DWG	90038	A

-Drawing shall be updated according to the comments on the GA drawing.
-Approval is subjected to the approval of coordination package between multi-discipline.

REVIEWED WITH COMMENT
MONORAILS PROJECT

All holes are 22mm U.N.O Length & Area & Weight per piece

Mark	Profile	Grade	QTY	Length	Area	Weight
FP2	FLT20*400	S355J2N	4	4025.7	3.33	242.6

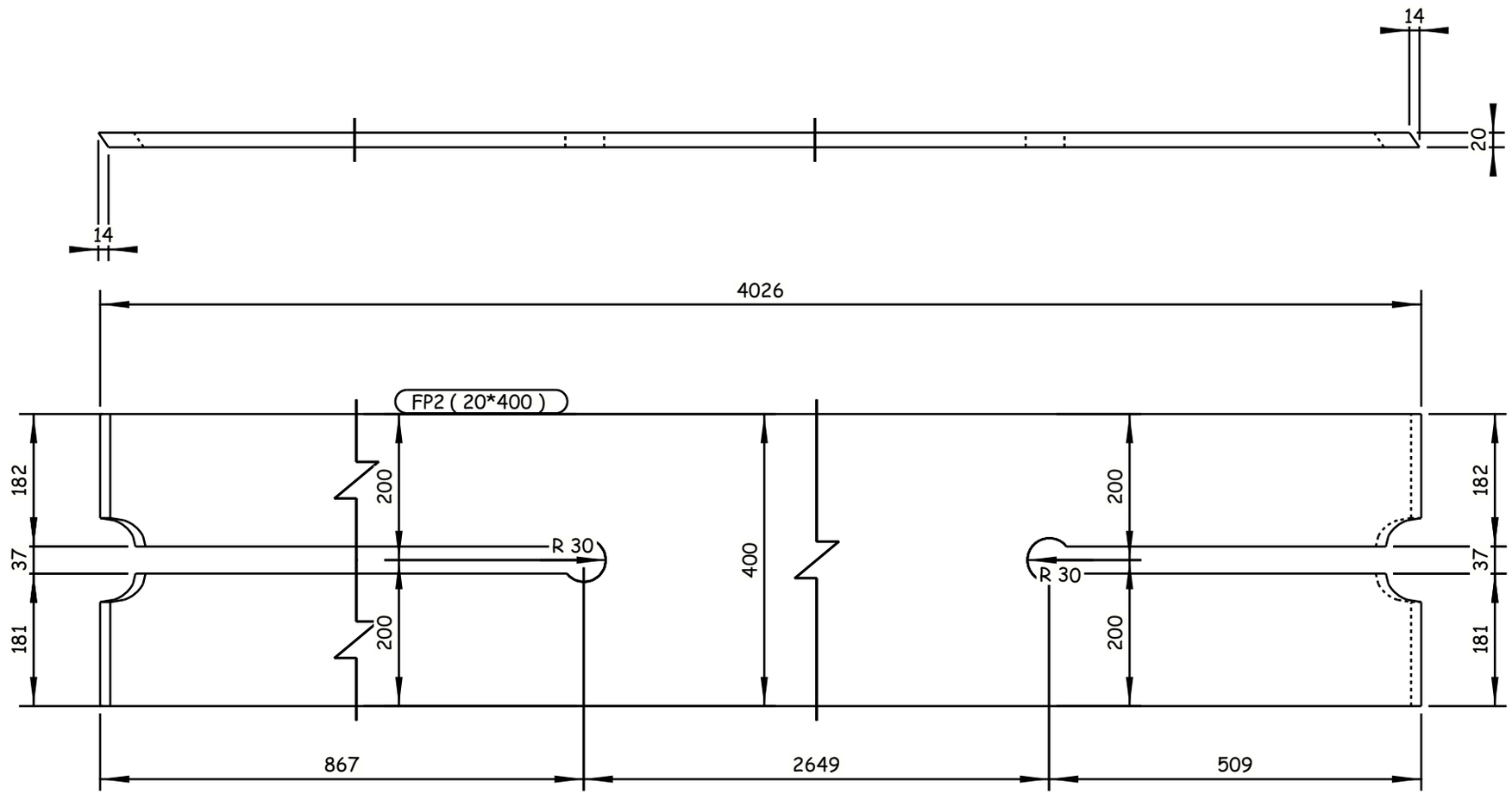

4 REQUIRED AS DRAWN E.SH FP2

6 October Monorail
Engineering Unit
Valid For Construction

GENERAL NOTES:

1. ALL DIMENSIONS ARE IN MILLIMETERS UNLESS OTHERWISE SPECIFIED.
2. LEVELS ARE IN METERS
3. DESIGN SERVICE LIFE OF 100 YEARS.
4. FLANGES OF TOP AND BOTTOM CHORDS TO BE SUPPLIED WITH IMPROVED THROUGH THICKNESS PROPERTIES Z25 ACCORDING TO EN10164.

REFERENCE DRAWINGS

1	93M-0407-SEN-6OL11-END-10118-B PAGE 01:17
2	
3	
4	
5	
6	
7	
8	
9	
10	
11	

6TH OF OCTOBER CITY RAIL TRANSIT MONORAIL &
NEW CAPITAL CITY RAIL TRANSIT MONORAIL

The Authority
Hill International
Authority Consultant
Main Contractor
Designer

CONTRACTOR
CONSULTANT :
ENGINEERING HOUSE FOR CONSULTANCY

SCALE: AS SHOWN | CHK'D DRWING | DATE: 20.11.2024

DRAWING TITLE:
6TH OF OCTOBER MONORAIL
SHOP DRAWING FOR BRIDGE 6OL11-37
STEEL TRUSS (I).
FP2

REV	DATE	BY	DESCRIPTION	CHK	APD
A	20-11-24	M.SH	ISSUE FOR APPROVAL	A.SH	M.M

Project Code	Rubric	Initiator	Lot	Ref	Number	Revision
93M	0407	ACC	60L11	DWG	90039	A

Tekla structures

-Drawing shall be updated according to the comments on the GA drawing.
-Approval is subjected to the approval of coordination package between multi-discipline.

REVIEWED WITH COMMENT
MONORAILS PROJECT

All holes are 22mm U.N.O Length & Area & Weight per piece

Mark	Profile	Grade	QTY	Length	Area	Weight
FP3	FLT25*600	S355J2N	4	2554.4	3.22	300.8

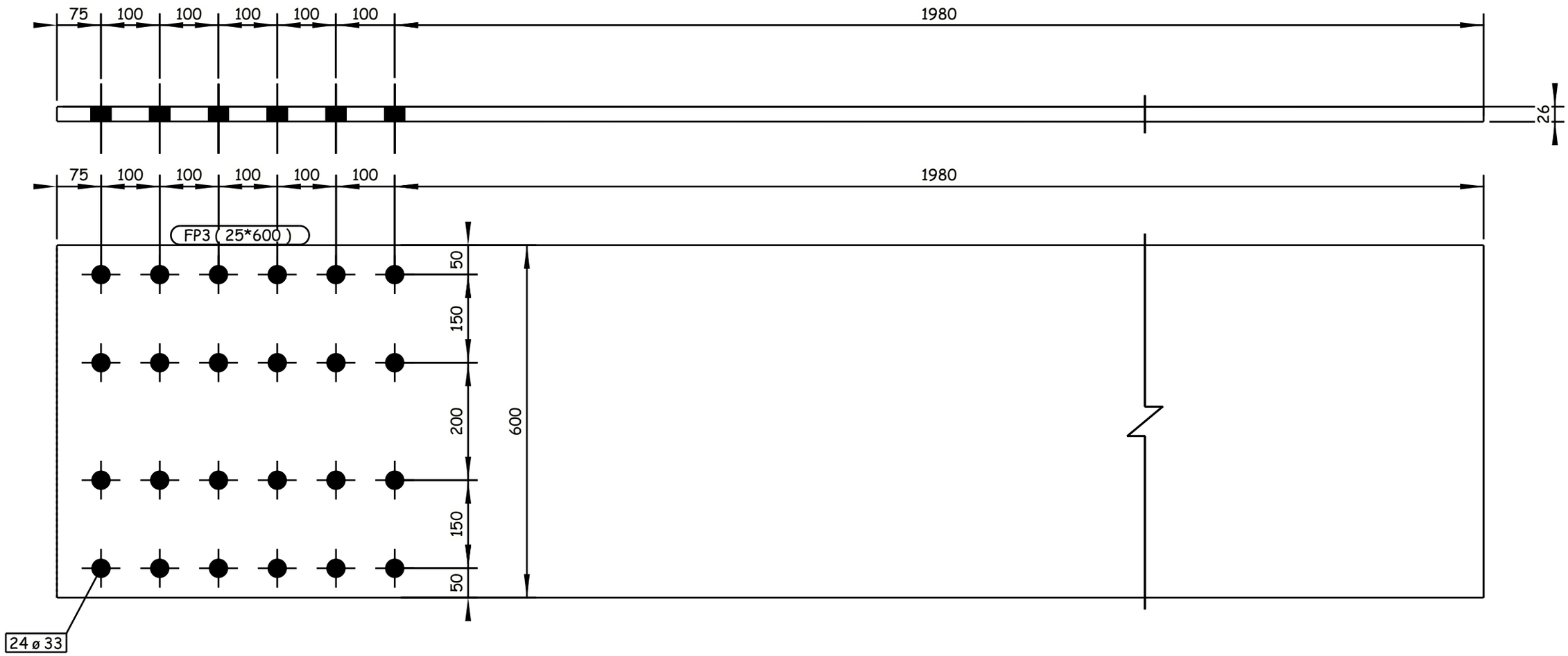

4 REQUIRED AS DRAWN E.SH FP3

Tekla structures

GENERAL NOTES:

1. ALL DIMENSIONS ARE IN MILLIMETERS UNLESS OTHERWISE SPECIFIED.
2. LEVELS ARE IN METERS
3. DESIGN SERVICE LIFE OF 100 YEARS.
4. FLANGES OF TOP AND BOTTOM CHORDS TO BE SUPPLIED WITH IMPROVED THROUGH THICKNESS PROPERTIES Z25 ACCORDING TO EN10164.

REFERENCE DRAWINGS

1	93M-0407-SEN-6OL11-END-10118-B PAGE 01:17
2	
3	
4	
5	
6	
7	
8	
9	
10	
11	

6TH OF OCTOBER CITY RAIL TRANSIT MONORAIL &
NEW CAPITAL CITY RAIL TRANSIT MONORAIL

The Authority
Hill International
Authority Consultant

Main Contractor

Designer

CONTRACTOR / CONSULTANT:
ENGINEERING HOUSE FOR CONSULTANCY

6 October Monorail
Engineering Unit
Valid For Construction

SCALE	SHD DRAWING	DATE
AS SHOWN		20.11.2024

DRAWING TITLE:
6TH OF OCTOBER MONORAIL
SHOP DRAWING FOR BRIDGE 6OL11-37
STEEL TRUSS (I).
FP3

REV	DATE	BY	DESCRIPTION	CHK	APD
A	20-11-24	M.SH	ISSUE FOR APPROVAL	A.SH	M.M

Project Code	Rubric	Initiator	Lot	Ref	Number	Revision
93M	0407	ACC	60L11	DWG	90040	A

-Drawing shall be updated according to the comments on the GA drawing.
-Approval is subjected to the approval of coordination package between multi-discipline.

REVIEWED WITH COMMENT
MONORAILS PROJECT

All holes are 22mm U.N.O Length & Area & Weight per piece

Mark	Profile	Grade	QTY	Length	Area	Weight
FP4	FLT20*400	S355J2N	4	4030.4	3.33	242.8

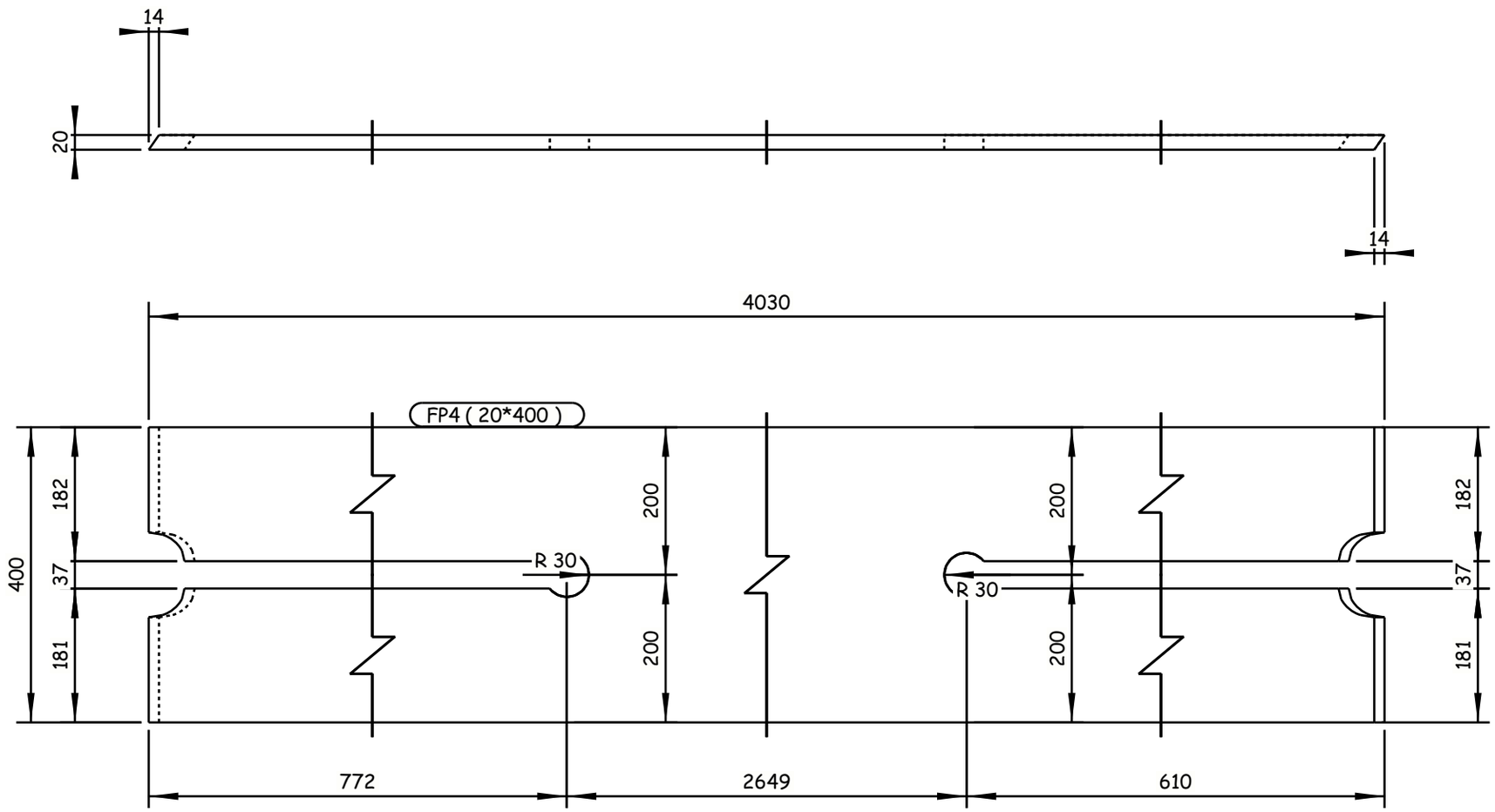

4 REQUIRED AS DRAWN E.SH FP4

GENERAL NOTES:

1. ALL DIMENSIONS ARE IN MILLIMETERS UNLESS OTHERWISE SPECIFIED.
2. LEVELS ARE IN METERS
3. DESIGN SERVICE LIFE OF 100 YEARS.
4. FLANGES OF TOP AND BOTTOM CHORDS TO BE SUPPLIED WITH IMPROVED THROUGH THICKNESS PROPERTIES Z25 ACCORDING TO EN10164.

REFERENCE DRAWINGS

1	93M-0407-SEN-6OL11-END-10118-B PAGE 01:17
2	
3	
4	
5	
6	
7	
8	
9	
10	
11	

6TH OF OCTOBER CITY RAIL TRANSIT MONORAIL &
NEW CAPITAL CITY RAIL TRANSIT MONORAIL

The Authority
Hill International
Authority Consultant

ORASCOM CONSTRUCTION
BOMBARDIER
Main Contractor

SENER
SHAKER CONSULTANCY GROUP
Designer

CONTRACTOR & CONSULTANT:
ENGINEERING HOUSE FOR CONSULTANCY

6 October Monorail
Engineering Unit
Valid For Construction

SCALE	SHOP DRAWING	DATE
AS SHOWN		20.11.2024

REV	DATE	BY	DESCRIPTION	CHK	APD
A	20-11-24	M.SH	ISSUE FOR APPROVAL	A.SH	M.M

DRAWING TITLE:
6TH OF OCTOBER MONORAIL
SHOP DRAWING FOR BRIDGE 6OL11-37
STEEL TRUSS (I).
FP4

Project Code	Rubric	Initiator	Lot	Ref	Number	Revision
93M	407	ACC	60L11	DWG	90041	A

Tekla structures

-Drawing shall be updated according to the comments on the GA drawing.
-Approval is subjected to the approval of coordination package between multi-discipline.

REVIEWED WITH COMMENT
MONORAILS PROJECT

All holes are 22mm U.N.O Length & Area & Weight per piece

Mark	Profile	Grade	QTY	Length	Area	Weight
FP5	FLT20*400	S355J2N	4	4030.2	3.33	242.8

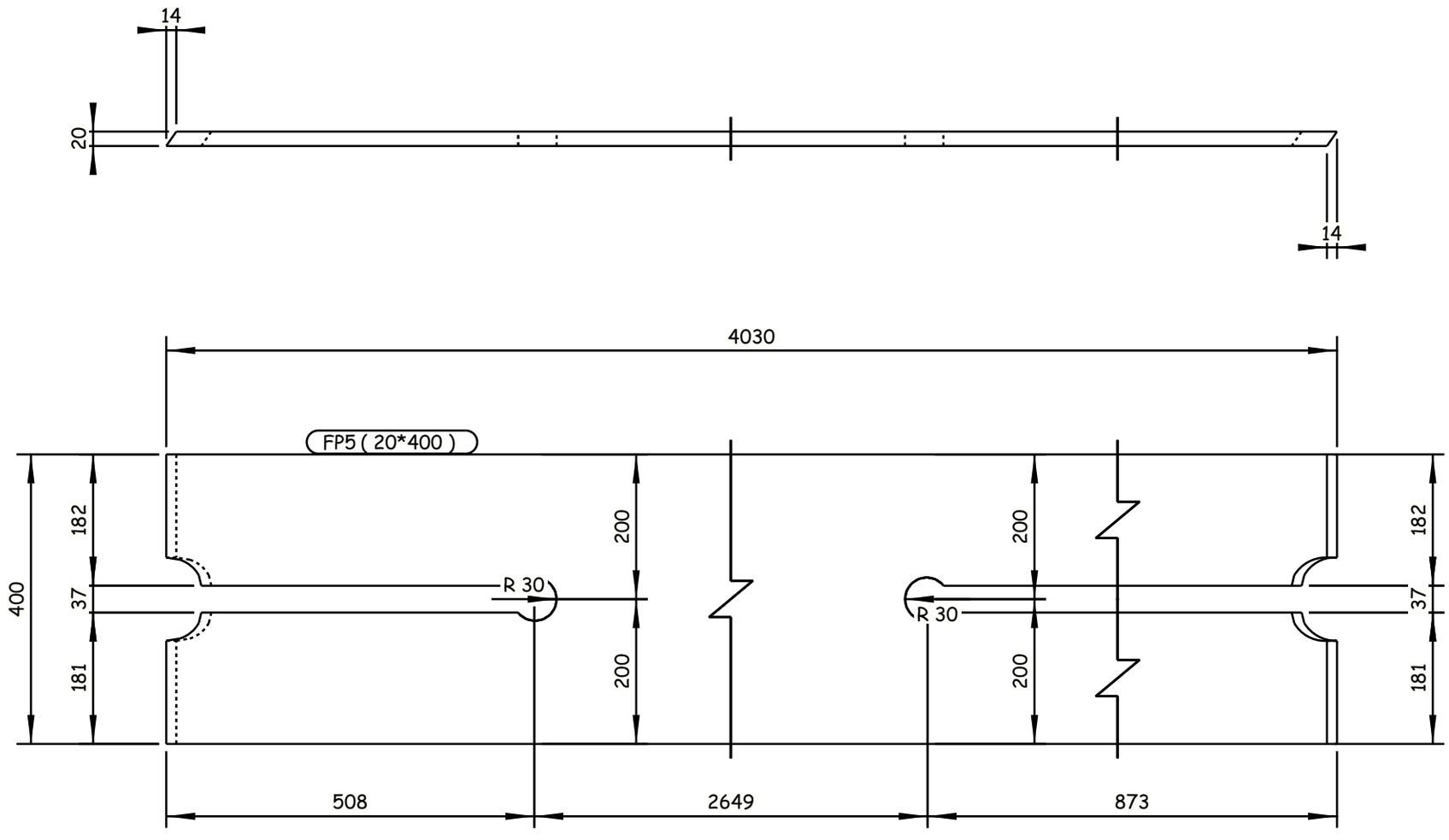

4 REQUIRED AS DRAWN E.SH FP5

GENERAL NOTES:

1. ALL DIMENSIONS ARE IN MILLIMETERS UNLESS OTHERWISE SPECIFIED.
2. LEVELS ARE IN METERS
3. DESIGN SERVICE LIFE OF 100 YEARS.
4. FLANGES OF TOP AND BOTTOM CHORDS TO BE SUPPLIED WITH IMPROVED THROUGH THICKNESS PROPERTIES Z25 ACCORDING TO EN10164.

REFERENCE DRAWINGS

1	93M-0407-SEN-6OL11-END-10118-B PAGE 01:17
2	
3	
4	
5	
6	
7	
8	
9	
10	
11	

6TH OF OCTOBER CITY RAIL TRANSIT MONORAIL &
NEW CAPITAL CITY RAIL TRANSIT MONORAIL

The Authority
Hill International
Authority Consultant

ORASCOM CONSTRUCTION
BOMBARDIER
Main Contractor

SENER
SHAKER CONSULTANCY GROUP
Designer

CONTRACTOR / CONSULTANT:
ENGINEERING HOUSE FOR CONSULTANCY

6 October Monorail
Engineering Unit
Valid For Construction

SCALE	CHK'D DRAWING	DATE
AS SHOWN		20.11.2024

REV	DATE	BY	DESCRIPTION	CHK	APD
A	20-11-24	M.SH	ISSUE FOR APPROVAL	A.SH	M.M

DRAWING TITLE:
6TH OF OCTOBER MONORAIL
SHOP DRAWING FOR BRIDGE 6OL11-37
STEEL TRUSS (I).
FP5

Project Code	Rubric	Initiator	Lot	Ref	Number	Revision
93M	0407	ACC	60L11	DWG	90042	A

Tekla structures

-Drawing shall be updated according to the comments on the GA drawing.
-Approval is subjected to the approval of coordination package between multi-discipline.

REVIEWED WITH COMMENT
MONORAILS PROJECT

All holes are 22mm U.N.O Length & Area & Weight per piece

Mark	Profile	Grade	QTY	Length	Area	Weight
FP6	FLT30*600	S355J2N	4	14553.5	18.29	2001.9

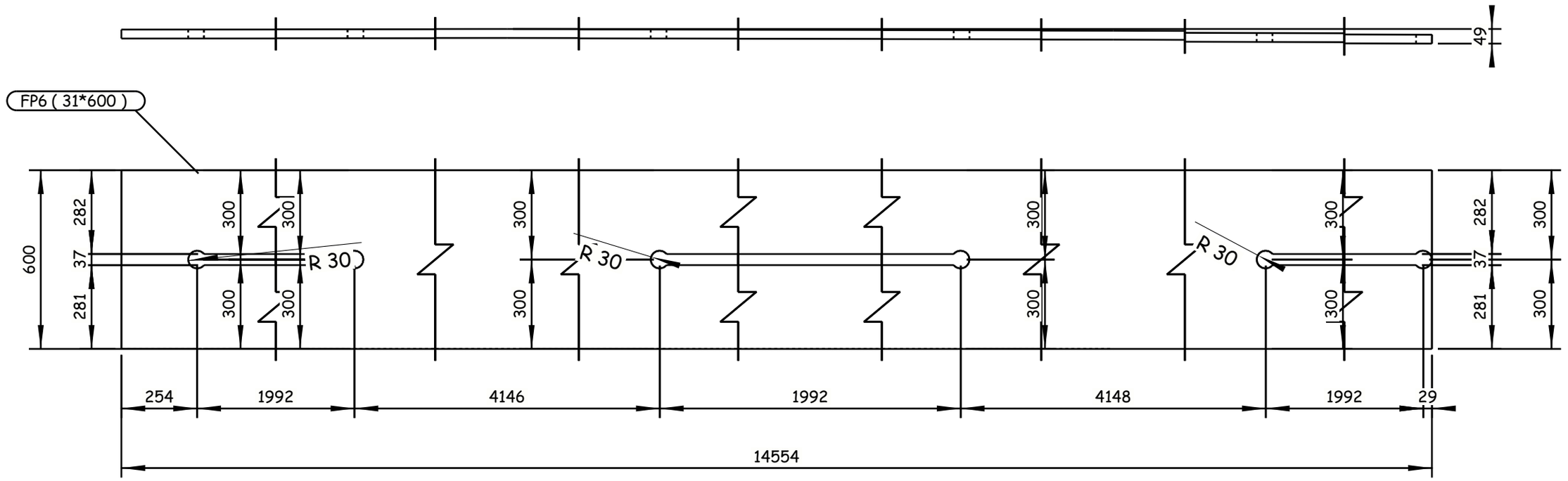

4 REQUIRED AS DRAWN E.SH FP6

GENERAL NOTES:
1. ALL DIMENSIONS ARE IN MILLIMETERS UNLESS OTHERWISE SPECIFIED.
2. LEVELS ARE IN METERS
3. DESIGN SERVICE LIFE OF 100 YEARS.
4. FLANGES OF TOP AND BOTTOM CHORDS TO BE SUPPLIED WITH IMPROVED THROUGH THICKNESS PROPERTIES Z25 ACCORDING TO EN10164.

REFERENCE DRAWINGS

1	93M-0407-SEN-6OL11-END-10118-B PAGE 01:17
2	
3	
4	
5	
6	
7	
8	
9	
10	
11	

6TH OF OCTOBER CITY RAIL TRANSIT MONORAIL &
NEW CAPITAL CITY RAIL TRANSIT MONORAIL

The Authority — Hill International Authority Consultant — ORASCOM CONSTRUCTION — BOMBARDIER — Main Contractor — SENER — SHAKER CONSULTANCY GROUP — Designer

CONTRACTOR / CONSULTANT:
ENGINEERING HOUSE FOR CONSULTANCY

SCALE: AS SHOWN | CHK'D DRAWING | DATE: 20.11.2024

REV	DATE	BY	DESCRIPTION	CHK	APD
A	20-11-24	M.SH	ISSUE FOR APPROVAL	A.SH	M.M

6 October Monorail
Engineering Unit
Valid For Construction

DRAWING TITLE:
6TH OF OCTOBER MONORAIL
SHOP DRAWING FOR BRIDGE 6OL11-37
STEEL TRUSS (I).
FP6

Project Code	Rubric	Initiator	Lot	Ref	Number	Revision
93M	0407	ACC	6OL11	DWG	90043	A

Tekla structures

-Drawing shall be updated according to the comments on the GA drawing.
-Approval is subjected to the approval of coordination package between multi-discipline.

REVIEWED WITH COMMENT
MONORAILS PROJECT

All holes are 22mm U.N.O Length & Area & Weight per piece

Mark	Profile	Grade	QTY	Length	Area	Weight
FP7	FLT30*600	S355J2N	4	14550.9	18.37	2056.0

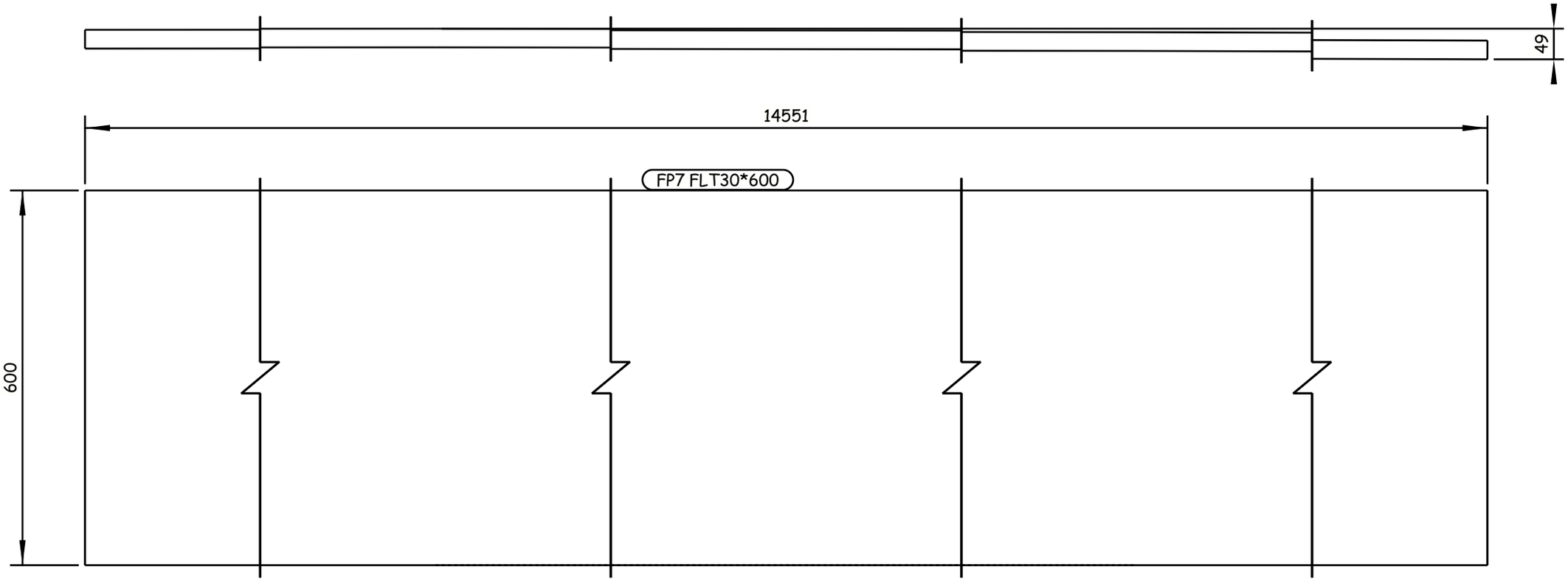

4 REQUIRED AS DRAWN E.SH FP7

Tekla structures

GENERAL NOTES:

1. ALL DIMENSIONS ARE IN MILLIMETERS UNLESS OTHERWISE SPECIFIED.
2. LEVELS ARE IN METERS
3. DESIGN SERVICE LIFE OF 100 YEARS.
4. FLANGES OF TOP AND BOTTOM CHORDS TO BE SUPPLIED WITH IMPROVED THROUGH THICKNESS PROPERTIES Z25 ACCORDING TO EN10164.

REFERENCE DRAWINGS

1	93M-0407-SEN-6OL11-END-10118-B PAGE 01:17
2	
3	
4	
5	
6	
7	
8	
9	
10	
11	

6TH OF OCTOBER CITY RAIL TRANSIT MONORAIL &
NEW CAPITAL CITY RAIL TRANSIT MONORAIL

The Authority
Hill International
Authority Consultant

ORASCOM CONSTRUCTION
Main Contractor

BOMBARDIER
SENER
SHAKER CONSULTANCY GROUP
Designer

CONTRACTOR / CONSULTANT :
ENGINEERING HOUSE FOR CONSULTANCY

SCALE	SHOP DRAWING	DATE
AS SHOWN		20.11.2024

REV	DATE	BY	DESCRIPTION	CHK	APD
A	20-11-24	M.SH	ISSUE FOR APPROVAL	A.SH	M.M

6 October Monorail
Engineering Unit
Valid For Construction

DRAWING TITLE:
6TH OF OCTOBER MONORAIL
SHOP DRAWING FOR BRIDGE 6OL11-37
STEEL TRUSS (I).
FP7

Project Code	Rubric	Initiator	Lot	Ref	Number	Revision
93M	0407	ACC	60L11	DWG	90044	A

-Drawing shall be updated according to the comments on the GA drawing.
-Approval is subjected to the approval of coordination package between multi-discipline.

REVIEWED WITH COMMENT
MONORAILS PROJECT

All holes are 22mm U.N.O Length & Area & Weight per piece

Mark	Profile	Grade	QTY	Length	Area	Weight
FP8	FLT30*400	S355J2N	4	4044.5	3.45	365.0

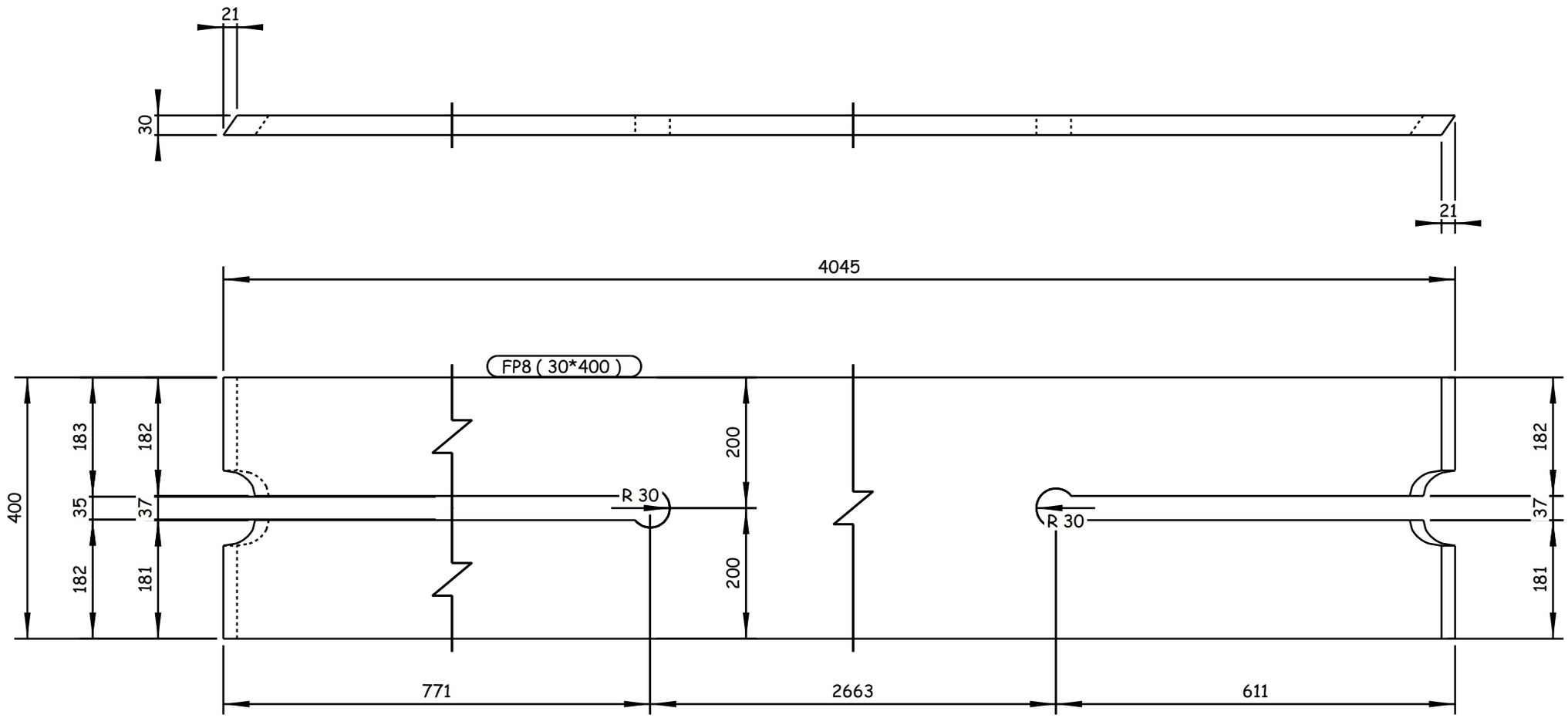

4 REQUIRED AS DRAWN E.SH FP8

6 October Monorail
Engineering Unit
Valid For Cönstruction

GENERAL NOTES:

1. ALL DIMENSIONS ARE IN MILLIMETERS UNLESS OTHERWISE SPECIFIED.
2. LEVELS ARE IN METERS
3. DESIGN SERVICE LIFE OF 100 YEARS.
4. FLANGES OF TOP AND BOTTOM CHORDS TO BE SUPPLIED WITH IMPROVED THROUGH THICKNESS PROPERTIES Z25 ACCORDING TO EN10164.

REFERENCE DRAWINGS

1	93M-0407-SEN-6OL11-END-10118-B PAGE 01:17
2	
3	
4	
5	
6	
7	
8	
9	
10	
11	

6TH OF OCTOBER CITY RAIL TRANSIT MONORAIL &
NEW CAPITAL CITY RAIL TRANSIT MONORAIL

The Authority
Hill International
Authority Consultant

ORASCOM CONSTRUCTION
BOMBARDIER
Main Contractor

SENER
SHAKER CONSULTANCY GROUP
Designer

CONTRACTOR & CONSULTANT:
ENGINEERING HOUSE FOR CONSULTANCY

SCALE	SHOP DRAWING	DATE
AS SHOWN		20.11.2024

DRAWING TITLE:
6TH OF OCTOBER MONORAIL
SHOP DRAWING FOR BRIDGE 6OL11-37
STEEL TRUSS (I).
FP8

REV	DATE	BY	DESCRIPTION	CHK	APD
A	20-11-24	M.SH	ISSUE FOR APPROVAL	A.SH	M.M

Project Code	Rubric	Initiator	Lot	Ref	Number	Revision
93M	0407	ACC	6OL11	DWG	90045	A

Tekla structures

-Drawing shall be updated according to the comments on the GA drawing.
-Approval is subjected to the approval of coordination package between multi-discipline.

REVIEWED WITH COMMENT
MONORAILS PROJECT

All holes are 22mm U.N.O Length & Area & Weight per piece

Mark	Profile	Grade	QTY	Length	Area	Weight
FP9	FLT30*400	S355J2N	4	4044.0	3.45	364.9

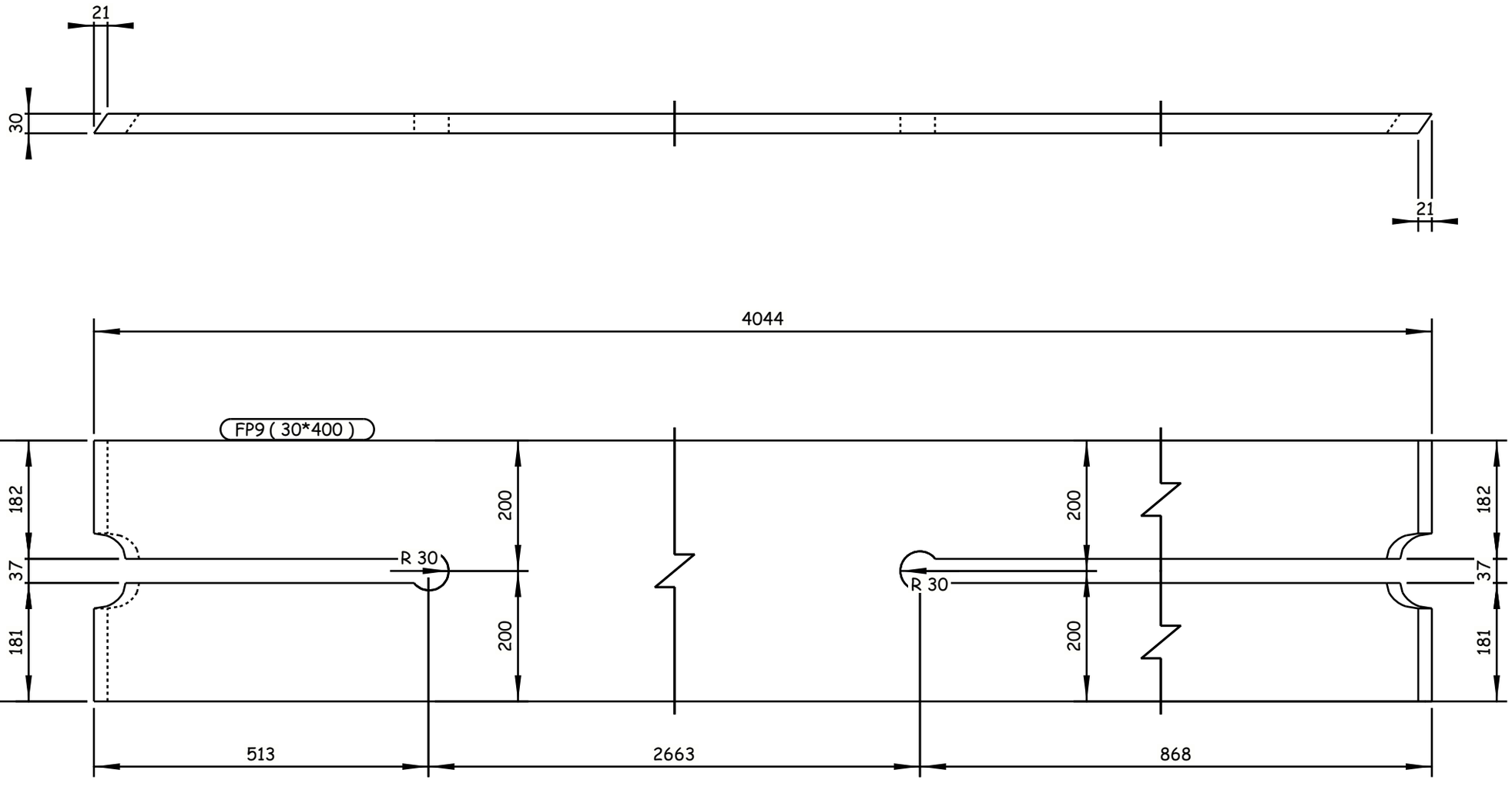

4 REQUIRED AS DRAWN E.SH FP9

6 October Monorail
Engineering Unit
Valid For Construction

GENERAL NOTES:

1. ALL DIMENSIONS ARE IN MILLIMETERS UNLESS OTHERWISE SPECIFIED.
2. LEVELS ARE IN METERS
3. DESIGN SERVICE LIFE OF 100 YEARS.
4. FLANGES OF TOP AND BOTTOM CHORDS TO BE SUPPLIED WITH IMPROVED THROUGH THICKNESS PROPERTIES Z25 ACCORDING TO EN10164.

REFERENCE DRAWINGS

1	93M-0407-SEN-6OL11-END-10118-B PAGE 01:17
2	
3	
4	
5	
6	
7	
8	
9	
10	
11	

6TH OF OCTOBER CITY RAIL TRANSIT MONORAIL &
NEW CAPITAL CITY RAIL TRANSIT MONORAIL

The Authority — Authority Consultant: Hill International — Main Contractor: ORASCOM CONSTRUCTION — BOMBARDIER — Designer: SENER, SHAKER

CONTRACTOR / CONSULTANT: ENGINEERING HOUSE FOR CONSULTANCY

SCALE: AS SHOWN | CHK'D DRAWING | DATE: 20.11.2024

REV	DATE	BY	DESCRIPTION	CHK	APD
A	20-11-24	M.SH	ISSUE FOR APPROVAL	A.SH	M.M

DRAWING TITLE:
6TH OF OCTOBER MONORAIL
SHOP DRAWING FOR BRIDGE 6OL11-37
STEEL TRUSS (I).
FP9

Project Code	Rubric	Initiator	Lot	Ref	Number	Revision
93M	0407	ACC	6OL11	DWG	90046	A

Tekla structures

-Drawing shall be updated according to the comments on the GA drawing.
-Approval is subjected to the approval of coordination package between multi-discipline.

REVIEWED WITH COMMENT
MONORAILS PROJECT

All holes are 22mm U.N.O Length & Area & Weight per piece

Mark	Profile	Grade	QTY	Length	Area	Weight
FP10	FLT20*400	S355J2N	4	1255.3	1.03	73.2

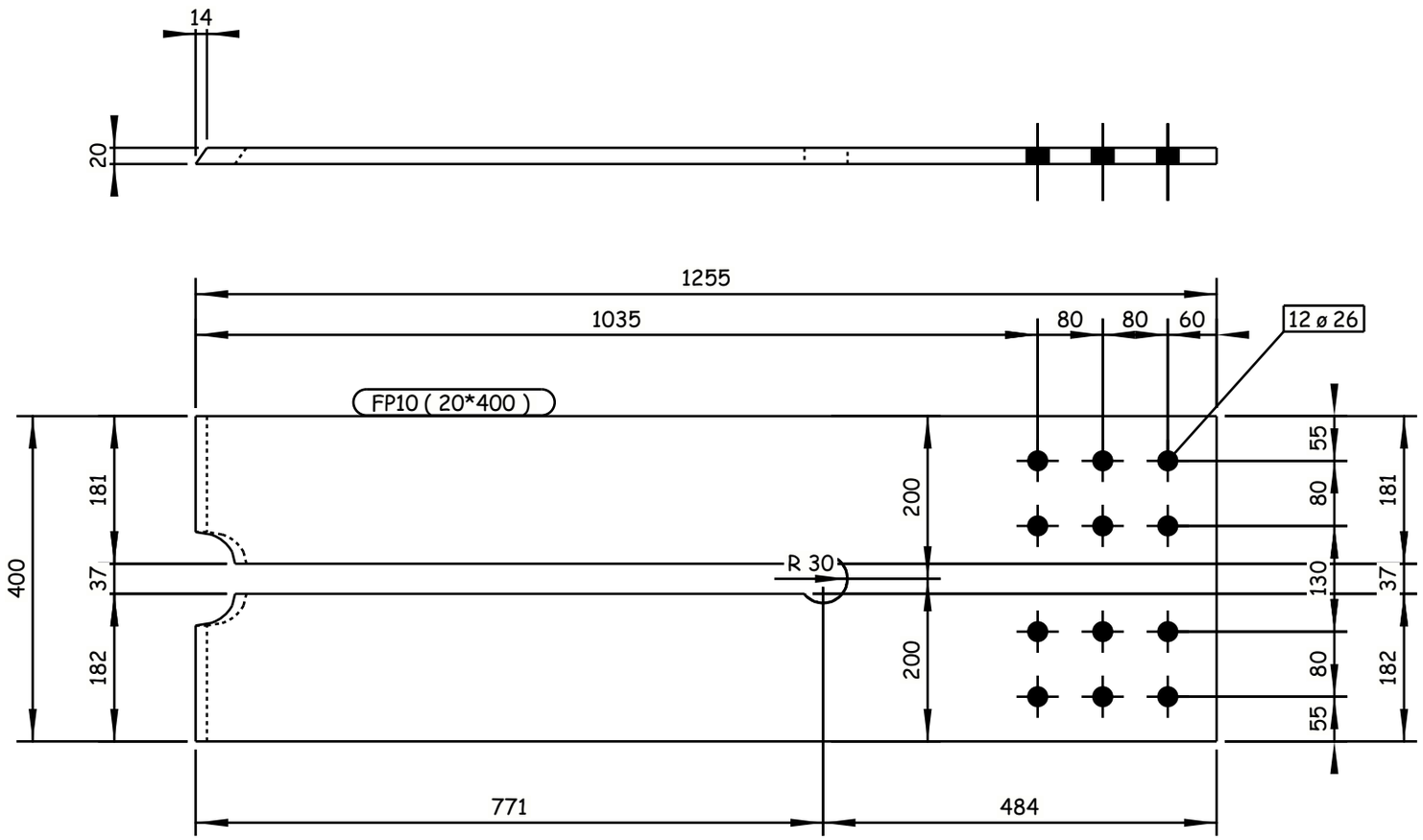

4 REQUIRED AS DRAWN E.SH FP10

GENERAL NOTES:

1. ALL DIMENSIONS ARE IN MILLIMETERS UNLESS OTHERWISE SPECIFIED.
2. LEVELS ARE IN METERS
3. DESIGN SERVICE LIFE OF 100 YEARS.
4. FLANGES OF TOP AND BOTTOM CHORDS TO BE SUPPLIED WITH IMPROVED THROUGH THICKNESS PROPERTIES Z25 ACCORDING TO EN10164.

REFERENCE DRAWINGS

1	93M-0407-SEN-6OL11-END-10118-B PAGE 01:17
2	
3	
4	
5	
6	
7	
8	
9	
10	
11	

6TH OF OCTOBER CITY RAIL TRANSIT MONORAIL &
NEW CAPITAL CITY RAIL TRANSIT MONORAIL

The Authority
Hill International
Authority Consultant

ORASCOM CONSTRUCTION
BOMBARDIER
Main Contractor

SENER
SHAKER CONSULTANCY GROUP
Designer

CONTRACTOR
CONSULTANT:

ENGINEERING HOUSE FOR CONSULTANCY

6 October Monorail
Engineering Unit
Valid For Construction

SCALE	SHOP DRAWING	DATE
AS SHOWN		20.11.2024

REV	DATE	BY	DESCRIPTION	CHK	APD
A	20-11-24	M.SH	ISSUE FOR APPROVAL	A.SH	M.M

DRAWING TITLE:
6TH OF OCTOBER MONORAIL
SHOP DRAWING FOR BRIDGE 6OL11-37
STEEL TRUSS (I).
FP10

Project Code	Rubric	Initiator	Lot	Ref	Number	Revision
93M	0407	ACC	6OL11	DWG	90047	A

Tekla structures

-Drawing shall be updated according to the comments on the GA drawing.
-Approval is subjected to the approval of coordination package between multi-discipline.

REVIEWED WITH COMMENT MONORAILS PROJECT

All holes are 22mm U.N.O Length & Area & Weight per piece						
FP11	FLT20*400	S355J2N	4	990.9	0.82	58.2
Mark	Profile	Grade	QTY	Length	Area	Weight

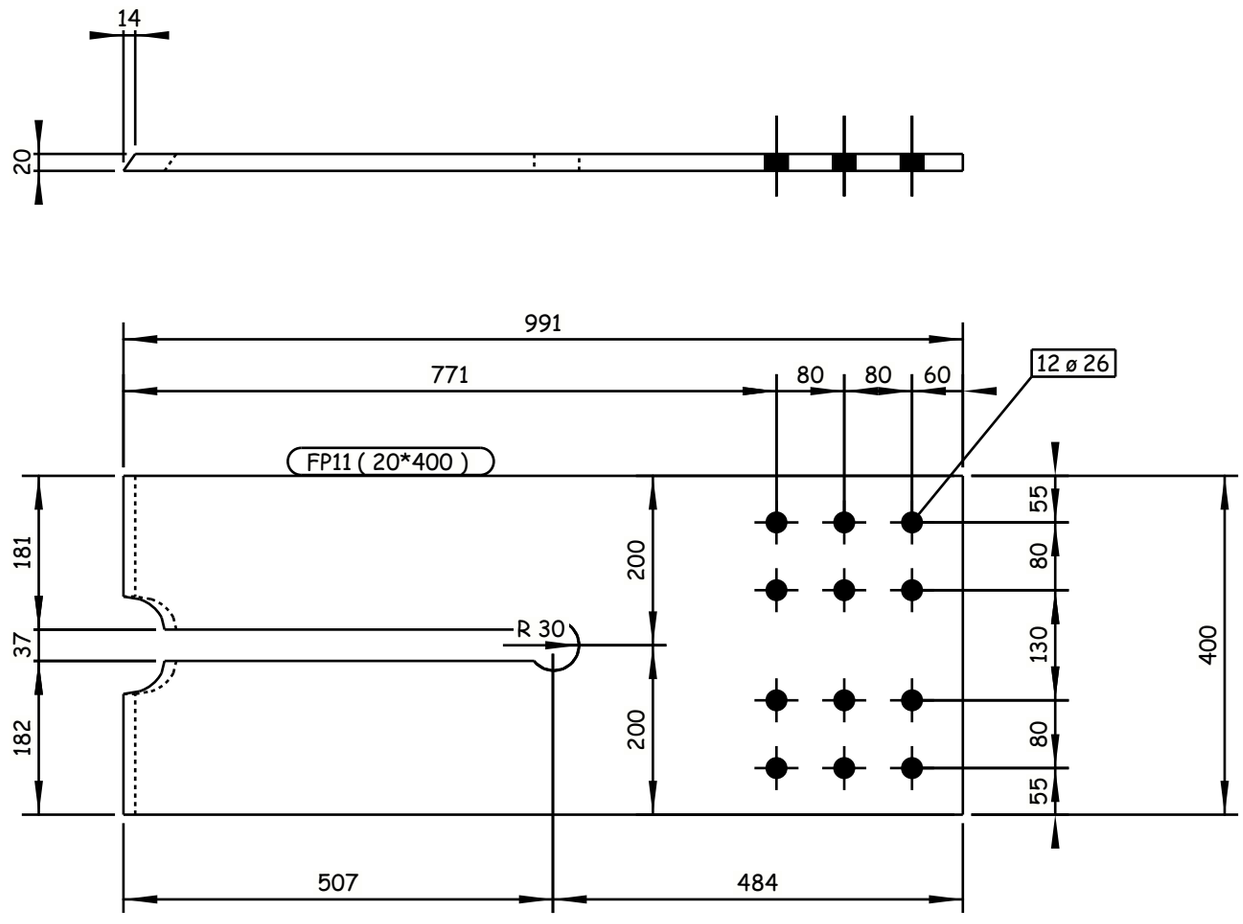

4 REQUIRED AS DRAWN E.SH FP11

6 October Monorail Engineering Unit
Valid For Construction

GENERAL NOTES:
1. ALL DIMENSIONS ARE IN MILLIMETERS UNLESS OTHERWISE SPECIFIED.
2. LEVELS ARE IN METERS
3. DESIGN SERVICE LIFE OF 100 YEARS.
4. FLANGES OF TOP AND BOTTOM CHORDS TO BE SUPPLIED WITH IMPROVED THROUGH THICKNESS PROPERTIES Z25 ACCORDING TO EN10164.

REFERENCE DRAWINGS

1	93M-0407-SEN-6OL11-END-10118-B PAGE 01:17
2	
3	
4	
5	
6	
7	
8	
9	
10	
11	

6TH OF OCTOBER CITY RAIL TRANSIT MONORAIL & NEW CAPITAL CITY RAIL TRANSIT MONORAIL

وزارة النقل MINISTRY OF TRANSPORT
The Authority
Hill International
Authority Consultant

ORASCOM CONSTRUCTION
BOMBARDIER
Main Contractor

SENER
SHAKER CONSULTANCY GROUP
Designer

CONTRACTOR CONSULTANT:
HEHC
ENGINEERING HOUSE FOR CONSULTANCY

SCALE AS SHOWN	SHOP DRAWING	DATE 20.11.2024

REV	DATE	BY	DESCRIPTION	CHK	APD
A	20-11-24	M.SH	ISSUE FOR APPROVAL	A.SH	M.M

DRAWING TITLE:
6TH OF OCTOBER MONORAIL
SHOP DRAWING FOR BRIDGE 6OL11-37
STEEL TRUSS (I).
FP11

Project Code	Rubric	Initiator	Lot	Ref	Number	Revision
9 3 M	0 4 0 7	A C C	6 0 L 1 1	D W G	90048	A

Tekla structures

-Drawing shall be updated according to the comments on the GA drawing.
-Approval is subjected to the approval of coordination package between multi-discipline.

REVIEWED WITH COMMENT
MONORAILS PROJECT

All holes are 22mm U.N.O Length & Area & Weight per piece

Mark	Profile	Grade	QTY	Length	Area	Weight
FP12	FLT25*600	S355J2N	2	14279.2	17.72	1634.8

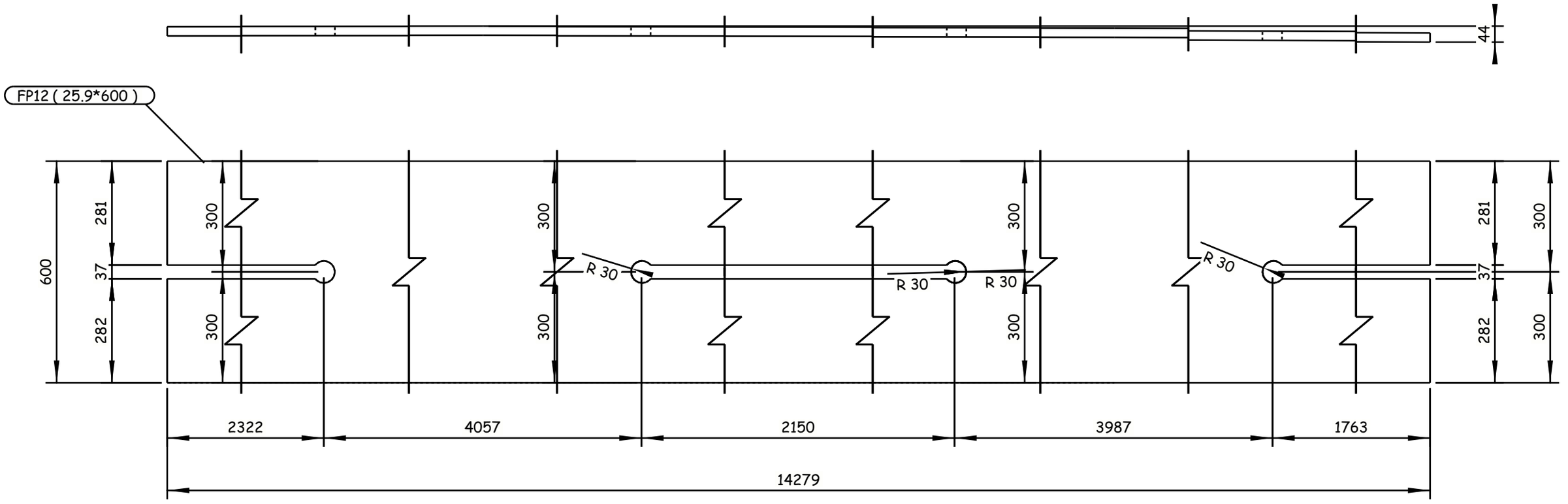

2 REQUIRED AS DRAWN E.SH FP12

Tekla structures

GENERAL NOTES:
1. ALL DIMENSIONS ARE IN MILLIMETERS UNLESS OTHERWISE SPECIFIED.
2. LEVELS ARE IN METERS
3. DESIGN SERVICE LIFE OF 100 YEARS.
4. FLANGES OF TOP AND BOTTOM CHORDS TO BE SUPPLIED WITH IMPROVED THROUGH THICKNESS PROPERTIES Z25 ACCORDING TO EN10164.

REFERENCE DRAWINGS

1	93M-0407-SEN-6OL11-END-10118-B PAGE 01:17
2	
3	
4	
5	
6	
7	
8	
9	
10	
11	

6TH OF OCTOBER CITY RAIL TRANSIT MONORAIL &
NEW CAPITAL CITY RAIL TRANSIT MONORAIL

The Authority | Hill International Authority Consultant | Main Contractor | Designer

CONTRACTOR/ CONSULTANT:
ENGINEERING HOUSE FOR CONSULTANCY

6 October Monorail
Engineering Unit
Valid For Construction

SCALE: AS SHOWN | SHOP DRAWING | DATE: 20.11.2024

DRAWING TITLE:
6TH OF OCTOBER MONORAIL
SHOP DRAWING FOR BRIDGE 6OL11-37
STEEL TRUSS (I).
FP12

REV	DATE	BY	DESCRIPTION	CHK	APD
A	20-11-24	M.SH	ISSUE FOR APPROVAL	A.SH	M.M

Project Code	Rubric	Initiator	Lot	Ref	Number	Revision
93M	0407	ACC	60L11	DWG	90049	A

-Drawing shall be updated according to the comments on the GA drawing.
-Approval is subjected to the approval of coordination package between multi-discipline.

REVIEWED WITH COMMENT MONORAILS PROJECT

All holes are 22mm U.N.O Length & Area & Weight per piece						
FP13	FLT25*600	S355J2N	2	15757.6	19.52	1793.9
Mark	Profile	Grade	QTY	Length	Area	Weight

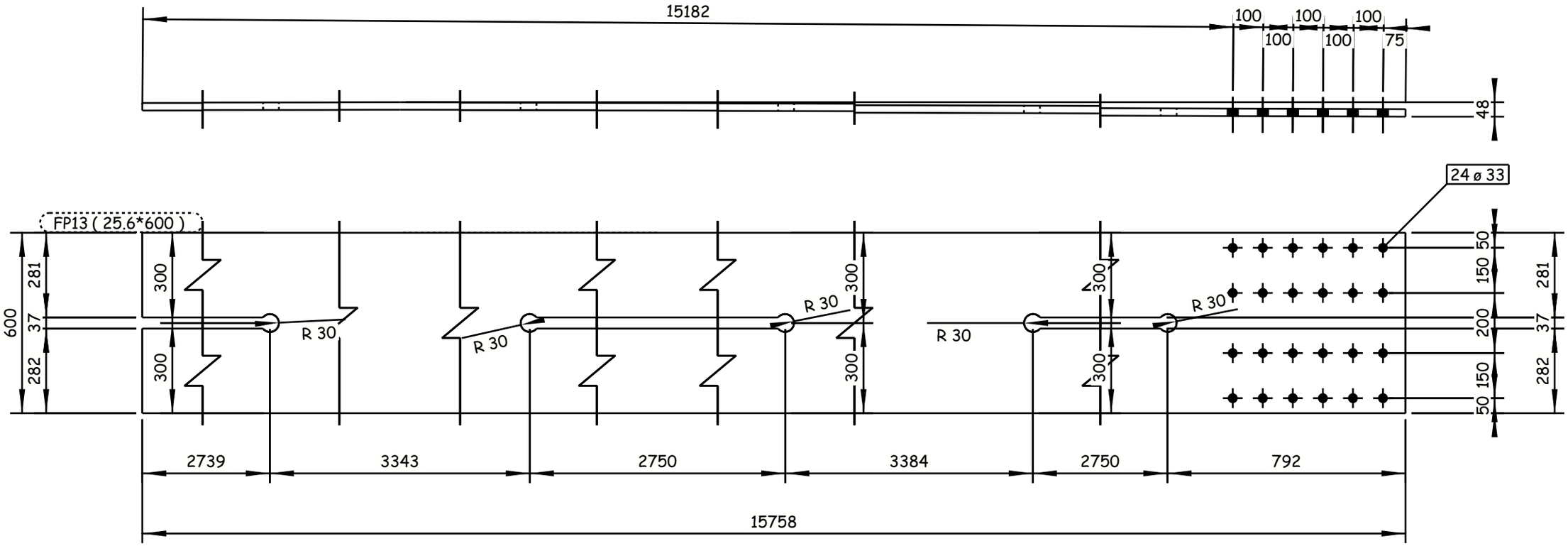

2 REQUIRED AS DRAWN E.SH FP13

6 October Monorail Engineering Unit
Valid For Construction

GENERAL NOTES:

1. ALL DIMENSIONS ARE IN MILLIMETERS UNLESS OTHERWISE SPECIFIED.
2. LEVELS ARE IN METERS
3. DESIGN SERVICE LIFE OF 100 YEARS.
4. FLANGES OF TOP AND BOTTOM CHORDS TO BE SUPPLIED WITH IMPROVED THROUGH THICKNESS PROPERTIES Z25 ACCORDING TO EN10164.

REFERENCE DRAWINGS

1	93M-0407-SEN-6OL11-END-10118-B PAGE 01:17
2	
3	
4	
5	
6	
7	
8	
9	
10	
11	

6TH OF OCTOBER CITY RAIL TRANSIT MONORAIL & NEW CAPITAL CITY RAIL TRANSIT MONORAIL

وزارة النقل MINISTRY OF TRANSPORT
The Authority
Hill International
Authority Consultant

ORASCOM CONSTRUCTION
BOMBARDIER
Main Contractor

SENER
SHAKER CONSULTANCY GROUP
Designer

CONTRACTOR CONSULTANT:
HEHC
ENGINEERING HOUSE FOR CONSULTANCY

SCALE AS SHOWN	SHOP DRAWING	DATE 20.11.2024

REV	DATE	BY	DESCRIPTION	CHK	APD
A	20-11-24	M.SH	ISSUE FOR APPROVAL	A.SH	M.M

DRAWING TITLE:
6TH OF OCTOBER MONORAIL
SHOP DRAWING FOR BRIDGE 6OL11-37
STEEL TRUSS (I).
FP13

Project Code	Rubric	Initiator	Lot	Ref	Number	Revision
93M	0407	ACC	6OL11	DWG	90050	A

Tekla structures

-Drawing shall be updated according to the comments on the GA drawing.
-Approval is subjected to the approval of coordination package between multi-discipline.

REVIEWED WITH COMMENT
MONORAILS PROJECT

All holes are 22mm U.N.O Length & Area & Weight per piece

Mark	Profile	Grade	QTY	Length	Area	Weight
FP14	FLT20*400	S355J2N	4	4022.1	3.32	242.4

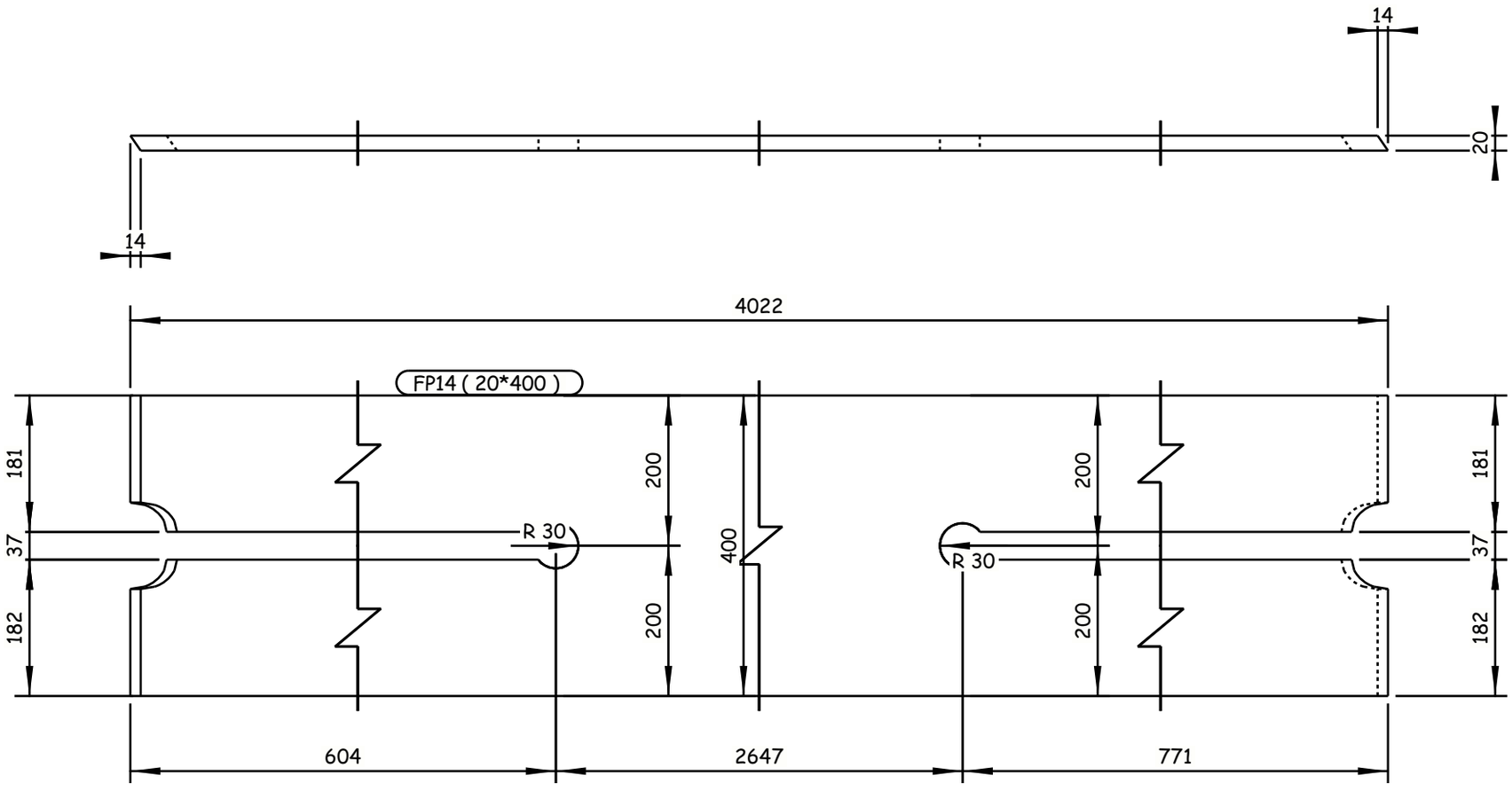

4 REQUIRED AS DRAWN E.SH FP14

6 October Monorail
Engineering Unit
Valid For Construction

GENERAL NOTES:

1. ALL DIMENSIONS ARE IN MILLIMETERS UNLESS OTHERWISE SPECIFIED.
2. LEVELS ARE IN METERS
3. DESIGN SERVICE LIFE OF 100 YEARS.
4. FLANGES OF TOP AND BOTTOM CHORDS TO BE SUPPLIED WITH IMPROVED THROUGH THICKNESS PROPERTIES Z25 ACCORDING TO EN10164.

REFERENCE DRAWINGS

1	93M-0407-SEN-6OL11-END-10118-B PAGE 01:17
2	
3	
4	
5	
6	
7	
8	
9	
10	
11	

6TH OF OCTOBER CITY RAIL TRANSIT MONORAIL &
NEW CAPITAL CITY RAIL TRANSIT MONORAIL

The Authority
Hill International
Authority Consultant

ORASCOM CONSTRUCTION
BOMBARDIER
Main Contractor

SENER
SHAKER CONSULTANCY GROUP
Designer

CONTRACTOR / CONSULTANT :
ENGINEERING HOUSE FOR CONSULTANCY

SCALE: AS SHOWN | CHD DRAWING | DATE: 20.11.2024

REV	DATE	BY	DESCRIPTION	CHK	APD
A	20-11-24	M.SH	ISSUE FOR APPROVAL	A.SH	M.M

DRAWING TITLE:
6TH OF OCTOBER MONORAIL
SHOP DRAWING FOR BRIDGE 6OL11-37
STEEL TRUSS (I).
FP14

Project Code	Rubric	Initiator	Lot	Ref	Number	Revision
93M	0407	ACC	60L11	DWG	90051	A

Tekla structures

-Drawing shall be updated according to the comments on the GA drawing.
-Approval is subjected to the approval of coordination package between multi-discipline.

REVIEWED WITH COMMENT
MONORAILS PROJECT

All holes are 22mm U.N.O Length & Area & Weight per piece

Mark	Profile	Grade	QTY	Length	Area	Weight
FP15	FLT20*400	S355J2N	4	4021.8	3.32	242.3

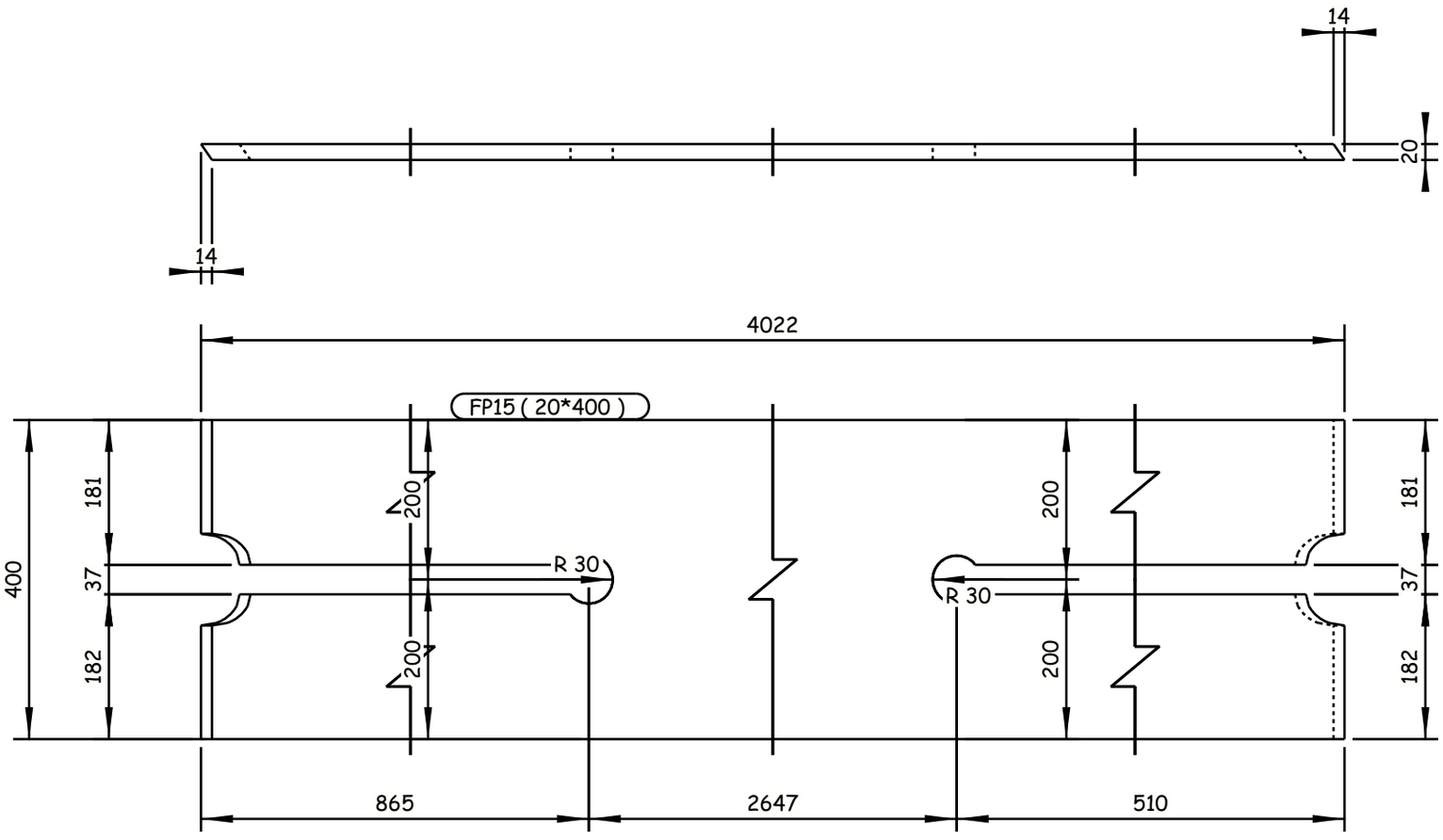

4 REQUIRED AS DRAWN E.SH FP15

GENERAL NOTES:

1. ALL DIMENSIONS ARE IN MILLIMETERS UNLESS OTHERWISE SPECIFIED.
2. LEVELS ARE IN METERS
3. DESIGN SERVICE LIFE OF 100 YEARS.
4. FLANGES OF TOP AND BOTTOM CHORDS TO BE SUPPLIED WITH IMPROVED THROUGH THICKNESS PROPERTIES Z25 ACCORDING TO EN10164.

REFERENCE DRAWINGS

1	93M-0407-SEN-6OL11-END-10118-B PAGE 01:17
2	
3	
4	
5	
6	
7	
8	
9	
10	
11	

6TH OF OCTOBER CITY RAIL TRANSIT MONORAIL &
NEW CAPITAL CITY RAIL TRANSIT MONORAIL

The Authority — Hill International Authority Consultant

Main Contractor: ORASCOM CONSTRUCTION / BOMBARDIER

Designer: SENER / SHAKER CONSULTANCY GROUP

CONTRACTOR / CONSULTANT : ENGINEERING HOUSE FOR CONSULTANCY

6 October Monorail
Engineering Unit
Valid For Construction

REV	DATE	BY	DESCRIPTION	CHK	APD
A	20-11-24	M.SH	ISSUE FOR APPROVAL	A.SH	M.M

SCALE: AS SHOWN | CHD DRAWING | DATE: 20.11.2024

DRAWING TITLE:
6TH OF OCTOBER MONORAIL
SHOP DRAWING FOR BRIDGE 6OL11-37
STEEL TRUSS (I).
FP15

Project Code	Rubric	Initiator	Lot	Ref	Number	Revision
93M	0407	ACC	60L11	DWG	90052	A

Tekla structures

-Drawing shall be updated according to the comments on the GA drawing.
-Approval is subjected to the approval of coordination package between multi-discipline.

REVIEWED WITH COMMENT
MONORAILS PROJECT

All holes are 22mm U.N.O Length & Area & Weight per piece

Mark	Profile	Grade	QTY	Length	Area	Weight
FP16	FLT30*400	S355J2N	4	4025.6	3.44	363.2

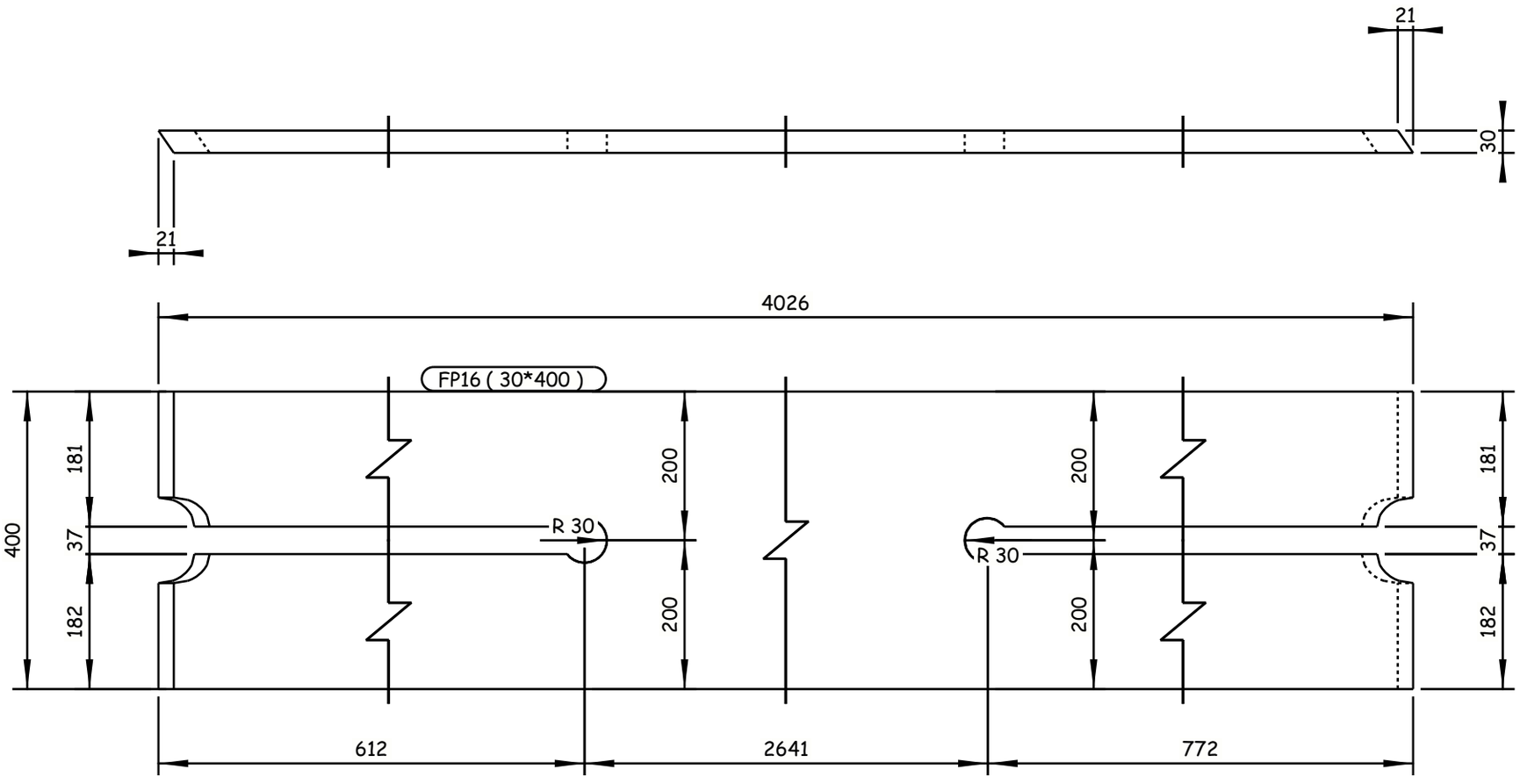

4 REQUIRED AS DRAWN E.SH FP16

6 October Monorail
Engineering Unit
Valid For Construction

GENERAL NOTES:

1. ALL DIMENSIONS ARE IN MILLIMETERS UNLESS OTHERWISE SPECIFIED.
2. LEVELS ARE IN METERS
3. DESIGN SERVICE LIFE OF 100 YEARS.
4. FLANGES OF TOP AND BOTTOM CHORDS TO BE SUPPLIED WITH IMPROVED THROUGH THICKNESS PROPERTIES Z25 ACCORDING TO EN10164.

REFERENCE DRAWINGS

1	93M-0407-SEN-6OL11-END-10118-B PAGE 01:17
2	
3	
4	
5	
6	
7	
8	
9	
10	
11	

6TH OF OCTOBER CITY RAIL TRANSIT MONORAIL &
NEW CAPITAL CITY RAIL TRANSIT MONORAIL

The Authority
Hill International
Authority Consultant

Main Contractor

Designer

CONTRACTOR / CONSULTANT :

ENGINEERING HOUSE FOR CONSULTANCY

SCALE: AS SHOWN | CHD DRAWING | DATE: 20.11.2024

REV	DATE	BY	DESCRIPTION	CHK	APD
A	20-11-24	M.SH	ISSUE FOR APPROVAL	A.SH	M.M

DRAWING TITLE:
6TH OF OCTOBER MONORAIL
SHOP DRAWING FOR BRIDGE 6OL11-37
STEEL TRUSS (I).
FP16

Project Code	Rubric	Initiator	Lot	Ref	Number	Revision
93M	0407	ACC	6OL11	DWG	90053	A

Tekla structures

-Drawing shall be updated according to the comments on the GA drawing.
-Approval is subjected to the approval of coordination package between multi-discipline.

REVIEWED WITH COMMENT
MONORAILS PROJECT

All holes are 22mm U.N.O Length & Area & Weight per piece

Mark	Profile	Grade	QTY	Length	Area	Weight
FP17	FLT30*400	S355J2N	4	4025.2	3.44	363.2

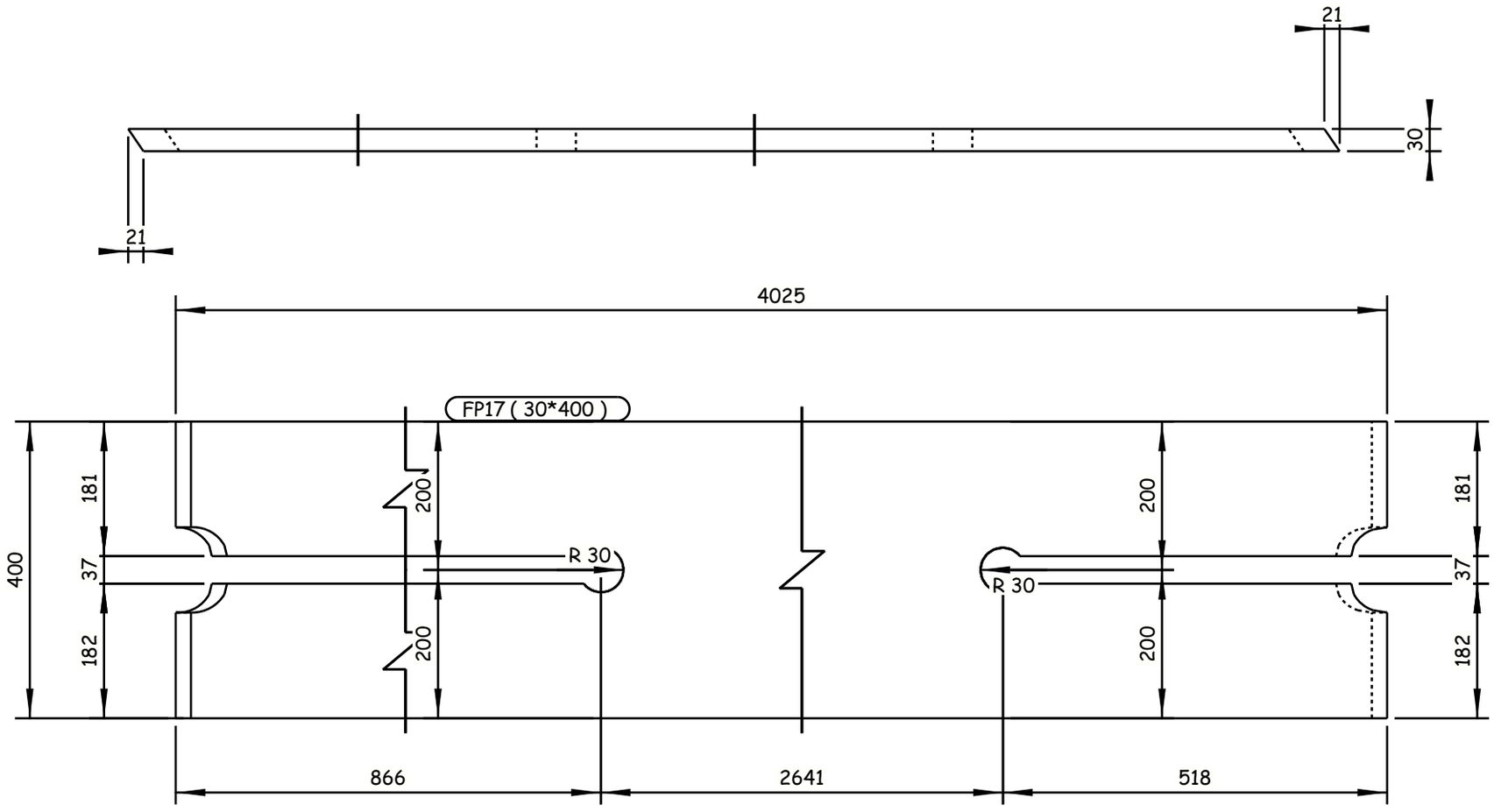

4 REQUIRED AS DRAWN E.SH FP17

6 October Monorail
Engineering Unit
Valid For Construction

GENERAL NOTES:
1. ALL DIMENSIONS ARE IN MILLIMETERS UNLESS OTHERWISE SPECIFIED.
2. LEVELS ARE IN METERS
3. DESIGN SERVICE LIFE OF 100 YEARS.
4. FLANGES OF TOP AND BOTTOM CHORDS TO BE SUPPLIED WITH IMPROVED THROUGH THICKNESS PROPERTIES Z25 ACCORDING TO EN10164.

REFERENCE DRAWINGS

1	93M-0407-SEN-6OL11-END-10118-B PAGE 01:17
2	
3	
4	
5	
6	
7	
8	
9	
10	
11	

6TH OF OCTOBER CITY RAIL TRANSIT MONORAIL &
NEW CAPITAL CITY RAIL TRANSIT MONORAIL

The Authority
Hill International
Authority Consultant

ORASCOM CONSTRUCTION
BOMBARDIER
Main Contractor

SENER
SHAKER CONSULTANCY GROUP
Designer

CONTRACTOR / CONSULTANT :
ENGINEERING HOUSE FOR CONSULTANCY

SCALE	CHD DRAWING	DATE
AS SHOWN		20.11.2024

REV	DATE	BY	DESCRIPTION	CHK	APD
A	20-11-24	M.SH	ISSUE FOR APPROVAL	A.SH	M.M

DRAWING TITLE:
6TH OF OCTOBER MONORAIL
SHOP DRAWING FOR BRIDGE 6OL11-37
STEEL TRUSS (I).
FP17

Project Code	Rubric	Initiator	Lot	Ref	Number	Revision
93M	0407	ACC	6OL11	DWG	90054	A

Tekla structures

-Drawing shall be updated according to the comments on the GA drawing.
-Approval is subjected to the approval of coordination package between multi-discipline.

REVIEWED WITH COMMENT
MONORAILS PROJECT

All holes are 22mm U.N.O Length & Area & Weight per piece

Mark	Profile	Grade	QTY	Length	Area	Weight
FP18	FLT35*400	S355J2N	2	4023.2	3.49	418.0

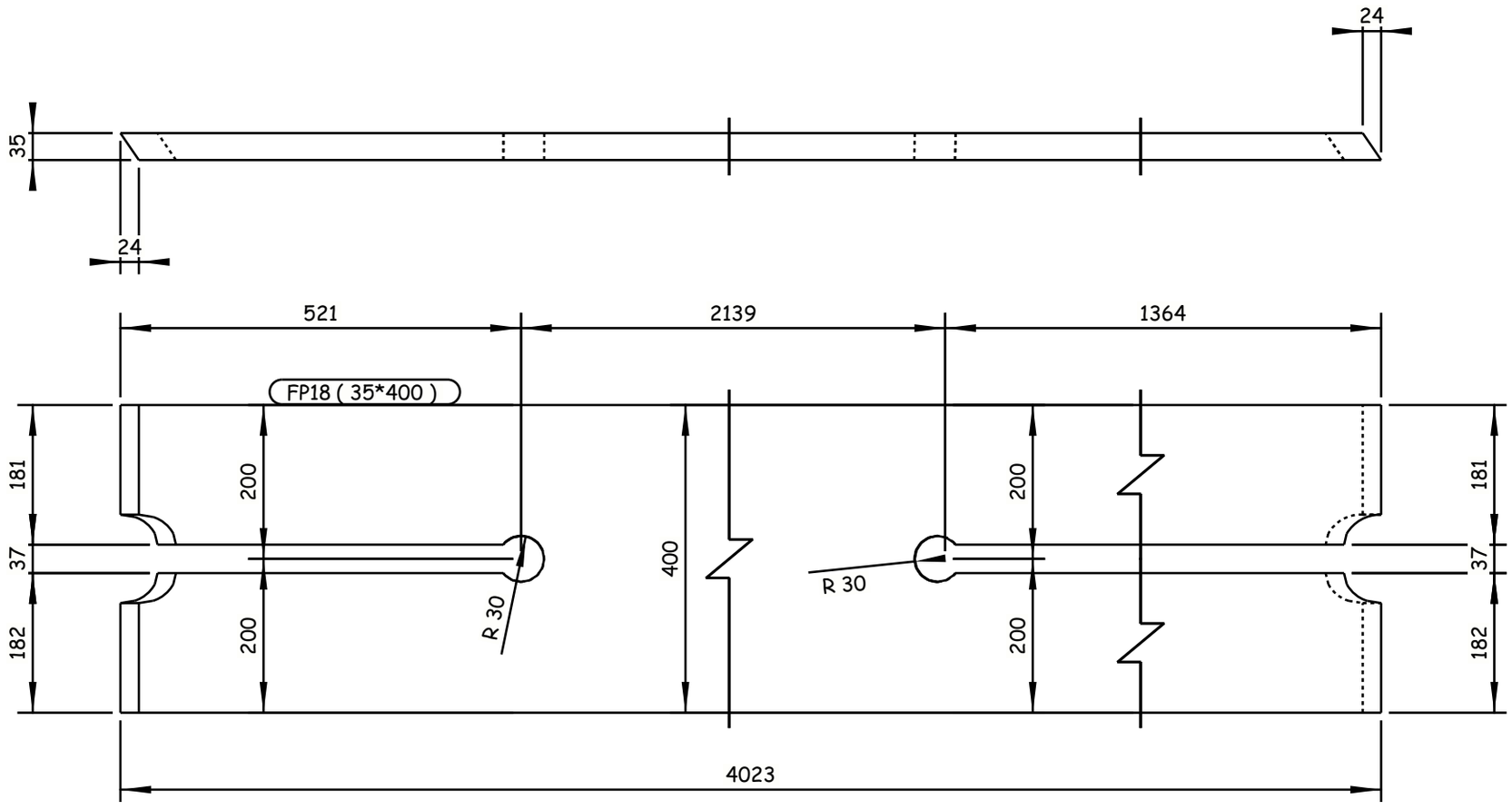

2 REQUIRED AS DRAWN E.SH FP18

GENERAL NOTES:

1. ALL DIMENSIONS ARE IN MILLIMETERS UNLESS OTHERWISE SPECIFIED.
2. LEVELS ARE IN METERS
3. DESIGN SERVICE LIFE OF 100 YEARS.
4. FLANGES OF TOP AND BOTTOM CHORDS TO BE SUPPLIED WITH IMPROVED THROUGH THICKNESS PROPERTIES Z25 ACCORDING TO EN10164.

REFERENCE DRAWINGS

1	93M-0407-SEN-6OL11-END-10118-B PAGE 01:17
2	
3	
4	
5	
6	
7	
8	
9	
10	
11	

6TH OF OCTOBER CITY RAIL TRANSIT MONORAIL &
NEW CAPITAL CITY RAIL TRANSIT MONORAIL

The Authority — Hill International Authority Consultant

Main Contractor: ORASCOM CONSTRUCTION, BOMBARDIER

Designer: SENER, SHAKER CONSULTANCY GROUP

CONTRACTOR / CONSULTANT :

ENGINEERING HOUSE FOR CONSULTANCY

REV	DATE	BY	DESCRIPTION	CHK	APD
A	20-11-24	M.SH	ISSUE FOR APPROVAL	A.SH	M.M

SCALE: AS SHOWN | CHD DRAWING | DATE: 20.11.2024

DRAWING TITLE:
6TH OF OCTOBER MONORAIL
SHOP DRAWING FOR BRIDGE 6OL11-37
STEEL TRUSS (I).
FP18

Project Code	Rubric	Initiator	Lot	Ref	Number	Revision
93M	0407	ACC	60L11	DWG	90055	A

6 October Monorail
Engineering Unit
Valid For Construction

Tekla structures

-Drawing shall be updated according to the comments on the GA drawing.
-Approval is subjected to the approval of coordination package between multi-discipline.

REVIEWED WITH COMMENT
MONORAILS PROJECT

All holes are 22mm U.N.O Length & Area & Weight per piece

Mark	Profile	Grade	QTY	Length	Area	Weight
FP19	FLT35*400	S355J2N	2	4023.9	3.49	418.1

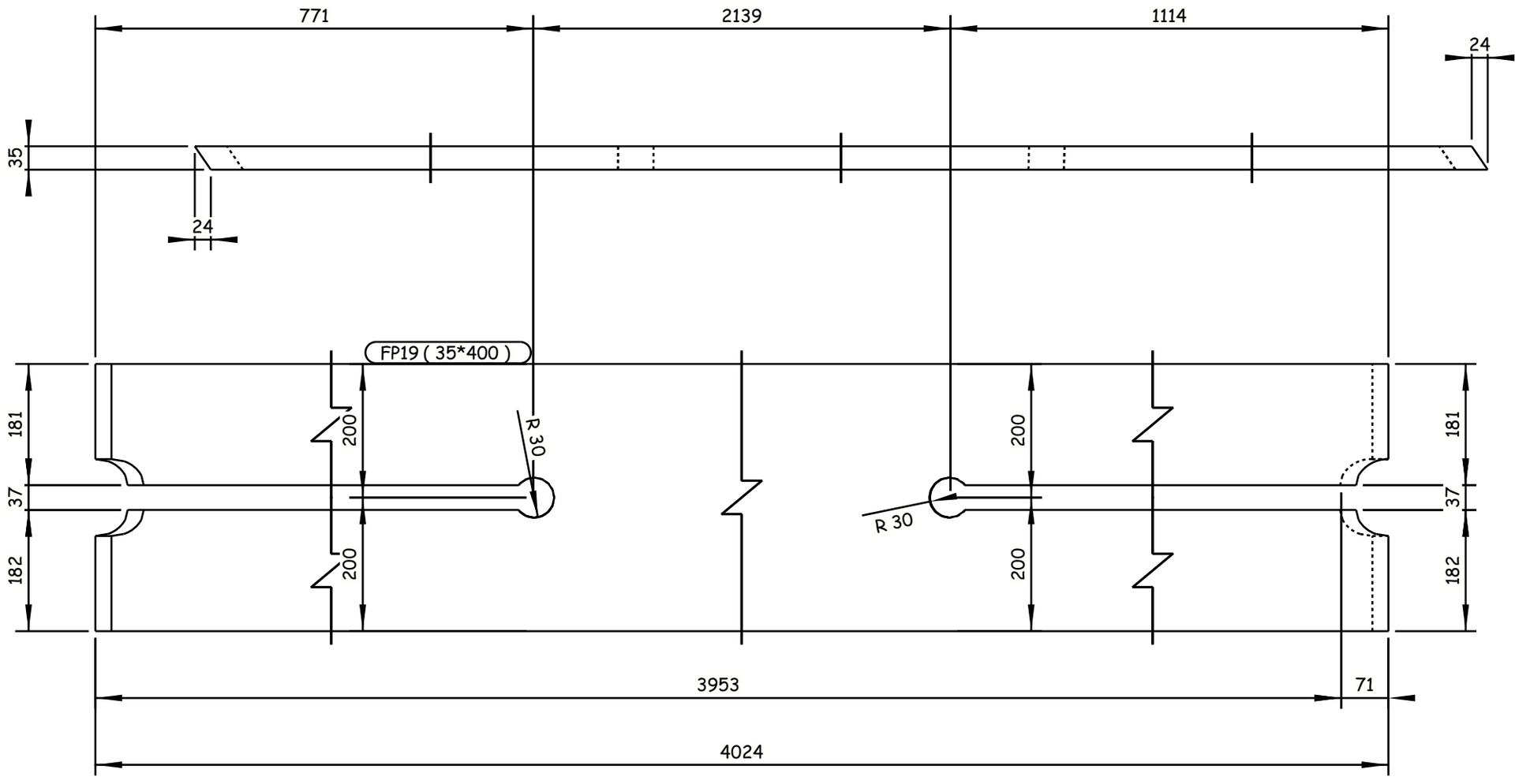

2 REQUIRED AS DRAWN E.SH FP19

GENERAL NOTES:

1. ALL DIMENSIONS ARE IN MILLIMETERS UNLESS OTHERWISE SPECIFIED.
2. LEVELS ARE IN METERS
3. DESIGN SERVICE LIFE OF 100 YEARS.
4. FLANGES OF TOP AND BOTTOM CHORDS TO BE SUPPLIED WITH IMPROVED THROUGH THICKNESS PROPERTIES Z25 ACCORDING TO EN10164.

REFERENCE DRAWINGS

1	93M-0407-SEN-6OL11-END-10118-B PAGE 01:17
2	
3	
4	
5	
6	
7	
8	
9	
10	
11	

6TH OF OCTOBER CITY RAIL TRANSIT MONORAIL &
NEW CAPITAL CITY RAIL TRANSIT MONORAIL

The Authority
Hill International
Authority Consultant

ORASCOM CONSTRUCTION
BOMBARDIER
Main Contractor

SENER
SHAKER CONSULTANCY GROUP
Designer

CONTRACTOR / CONSULTANT :
ENGINEERING HOUSE FOR CONSULTANCY

SCALE: AS SHOWN | SHOP DRAWING | DATE: 20.11.2024

REV	DATE	BY	DESCRIPTION	CHK	APD
A	20-11-24	M.SH	ISSUE FOR APPROVAL	A.SH	M.M

6 October Monorail
Engineering Unit
Valid For Construction

DRAWING TITLE:
6TH OF OCTOBER MONORAIL
SHOP DRAWING FOR BRIDGE 6OL11-37
STEEL TRUSS (I).
FP19

Project Code	Rubric	Initiator	Lot	Ref	Number	Revision
93M	0407	ACC	60L11	DWG	90056	A

Tekla structures

-Drawing shall be updated according to the comments on the GA drawing.
-Approval is subjected to the approval of coordination package between multi-discipline.

REVIEWED WITH COMMENT
MONORAILS PROJECT

All holes are 22mm U.N.O Length & Area & Weight per piece

Mark	Profile	Grade	QTY	Length	Area	Weight
FP20	FLT35*400	S355J2N	4	4051.0	3.51	426.2

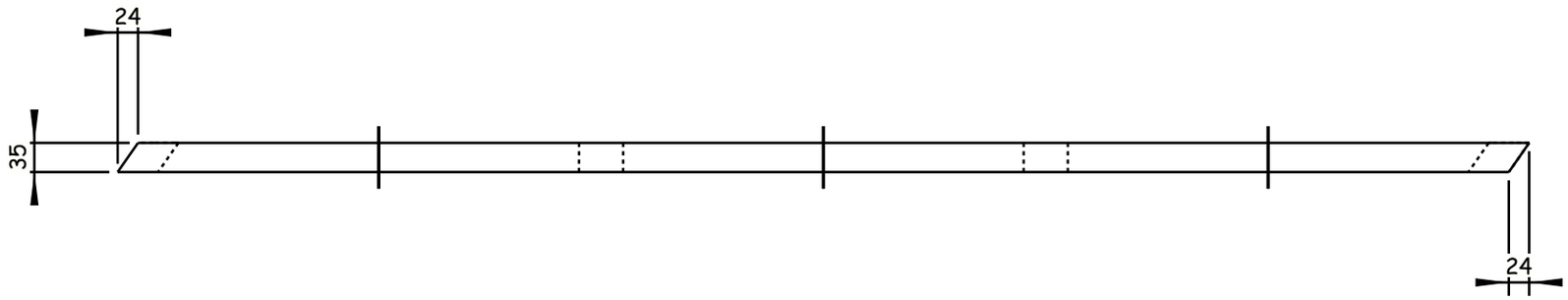

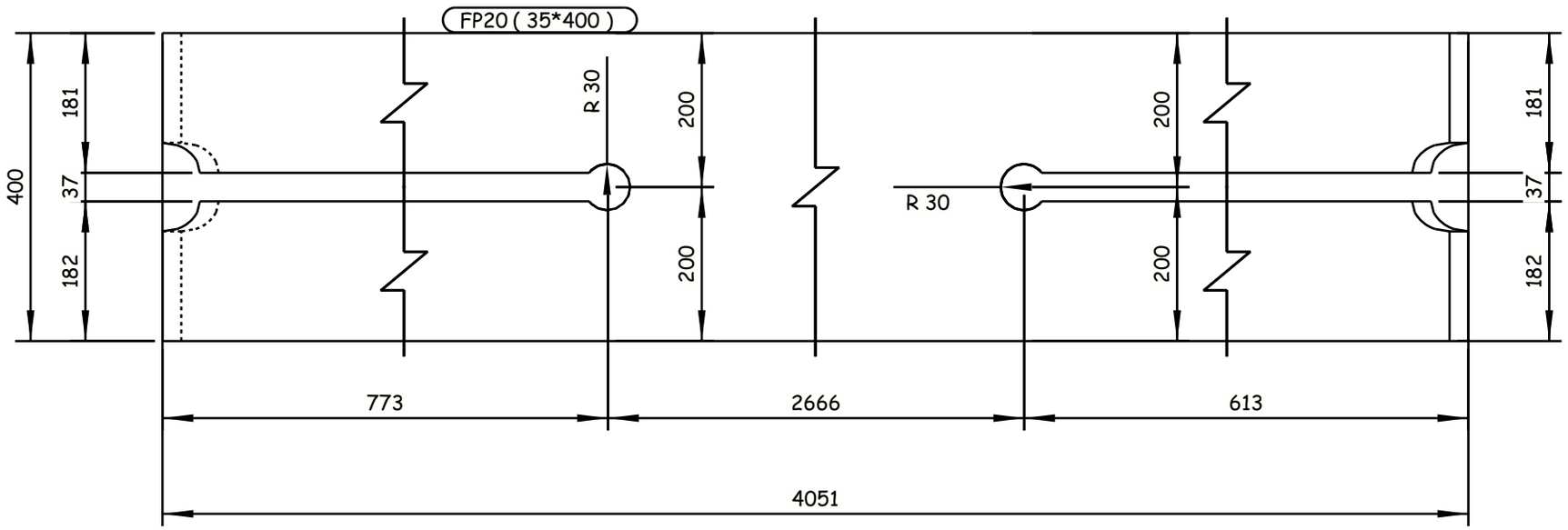

4 REQUIRED AS DRAWN E.SH FP20

Tekla structures

GENERAL NOTES:

1. ALL DIMENSIONS ARE IN MILLIMETERS UNLESS OTHERWISE SPECIFIED.
2. LEVELS ARE IN METERS
3. DESIGN SERVICE LIFE OF 100 YEARS.
4. FLANGES OF TOP AND BOTTOM CHORDS TO BE SUPPLIED WITH IMPROVED THROUGH THICKNESS PROPERTIES Z25 ACCORDING TO EN10164.

REFERENCE DRAWINGS

1	93M-0407-SEN-6OL11-END-10118-B PAGE 01:17
2	
3	
4	
5	
6	
7	
8	
9	
10	
11	

6TH OF OCTOBER CITY RAIL TRANSIT MONORAIL &
NEW CAPITAL CITY RAIL TRANSIT MONORAIL

The Authority
Hill International
Authority Consultant

ORASCOM CONSTRUCTION
BOMBARDIER
Main Contractor

SENER
SHAKER CONSULTANCY GROUP
Designer

CONTRACTOR & CONSULTANT:
EHC
ENGINEERING HOUSE FOR CONSULTANCY

6 October Monorail
Engineering Unit
Valid For Construction

SCALE	SHOP DRAWING	DATE
AS SHOWN		20.11.2024

DRAWING TITLE:
6TH OF OCTOBER MONORAIL
SHOP DRAWING FOR BRIDGE 6OL11-37
STEEL TRUSS (I).
FP20

REV	DATE	BY	DESCRIPTION	CHK	APD
A	20-11-24	M.SH	ISSUE FOR APPROVAL	A.SH	M.M

Project Code	Rubric	Initiator	Lot	Ref	Number	Revision
93M	0407	ACC	6OL11	DWG	90057	A

-Drawing shall be updated according to the comments on the GA drawing.
-Approval is subjected to the approval of coordination package between multi-discipline.

REVIEWED WITH COMMENT
MONORAILS PROJECT

All holes are 22mm U.N.O Length & Area & Weight per piece

Mark	Profile	Grade	QTY	Length	Area	Weight
FP21	FLT35*400	S355J2N	4	4051.0	3.51	426.2

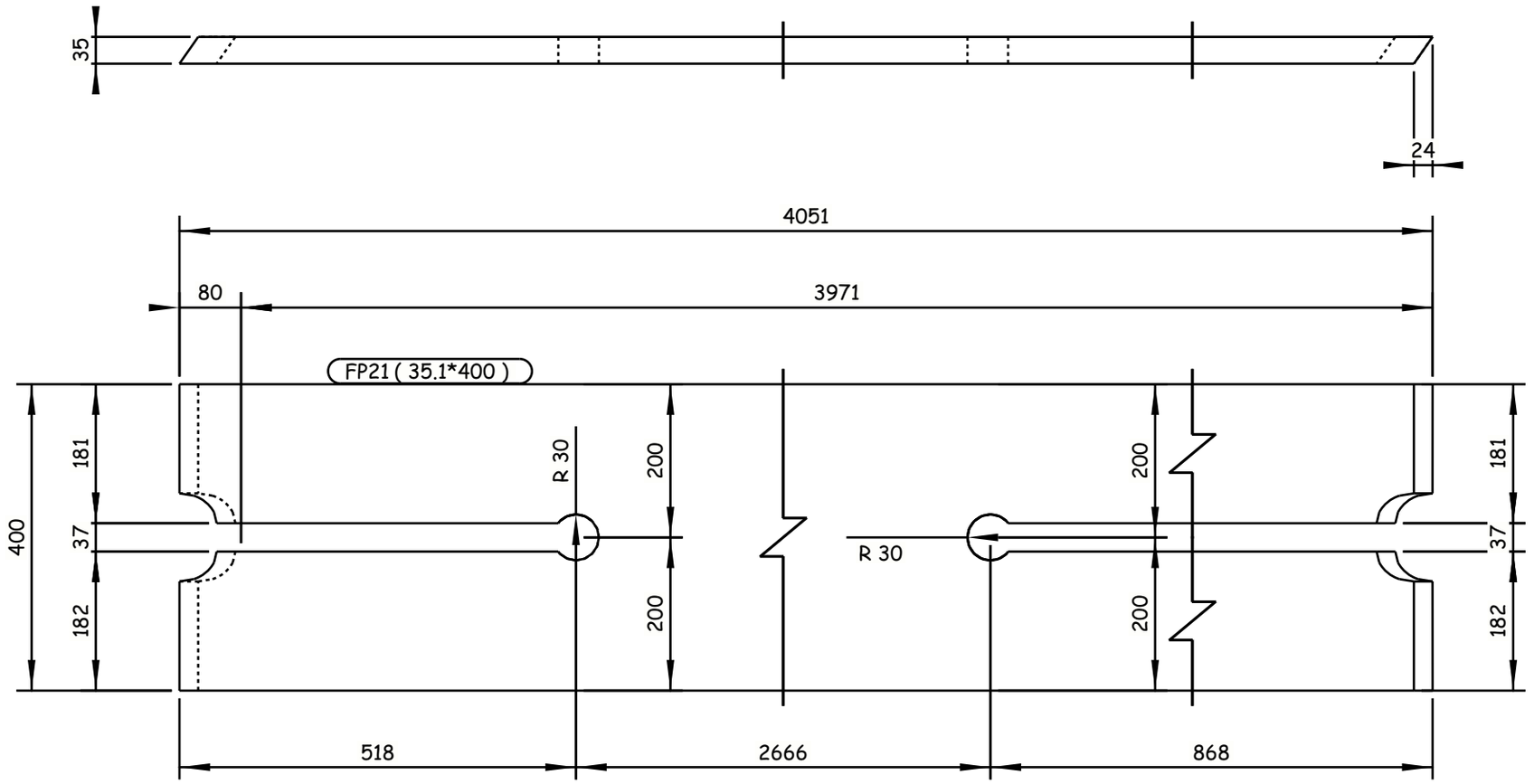

4 REQUIRED AS DRAWN E.SH FP21

GENERAL NOTES:
1. ALL DIMENSIONS ARE IN MILLIMETERS UNLESS OTHERWISE SPECIFIED.
2. LEVELS ARE IN METERS
3. DESIGN SERVICE LIFE OF 100 YEARS.
4. FLANGES OF TOP AND BOTTOM CHORDS TO BE SUPPLIED WITH IMPROVED THROUGH THICKNESS PROPERTIES Z25 ACCORDING TO EN10164.

REFERENCE DRAWINGS

1	93M-0407-SEN-6OL11-END-10118-B PAGE 01:17
2	
3	
4	
5	
6	
7	
8	
9	
10	
11	

6TH OF OCTOBER CITY RAIL TRANSIT MONORAIL &
NEW CAPITAL CITY RAIL TRANSIT MONORAIL

The Authority — Hill International Authority Consultant — ORASCOM CONSTRUCTION — BOMBARDIER — Main Contractor — SENER — SHAKER CONSULTANCY GROUP — Designer

CONTRACTOR / CONSULTANT:
ENGINEERING HOUSE FOR CONSULTANCY

SCALE	CHK'D DRAWING	DATE
AS SHOWN		20.11.2024

REV	DATE	BY	DESCRIPTION	CHK	APD
A	20-11-24	M.SH	ISSUE FOR APPROVAL	A.SH	M.M

6 October Monorail
Engineering Unit
Valid For Construction

DRAWING TITLE:
6TH OF OCTOBER MONORAIL
SHOP DRAWING FOR BRIDGE 6OL11-37
STEEL TRUSS (I).
FP21

Project Code	Rubric	Initiator	Lot	Ref	Number	Revision
93M	0407	ACC	60L11	DWG	90058	A

Tekla structures

-Drawing shall be updated according to the comments on the GA drawing.
-Approval is subjected to the approval of coordination package between multi-discipline.

REVIEWED WITH COMMENT
MONORAILS PROJECT

All holes are 22mm U.N.O Length & Area & Weight per piece

Mark	Profile	Grade	QTY	Length	Area	Weight
FP22	FLT25*600	S355J2N	4	1096.3	1.40	129.1

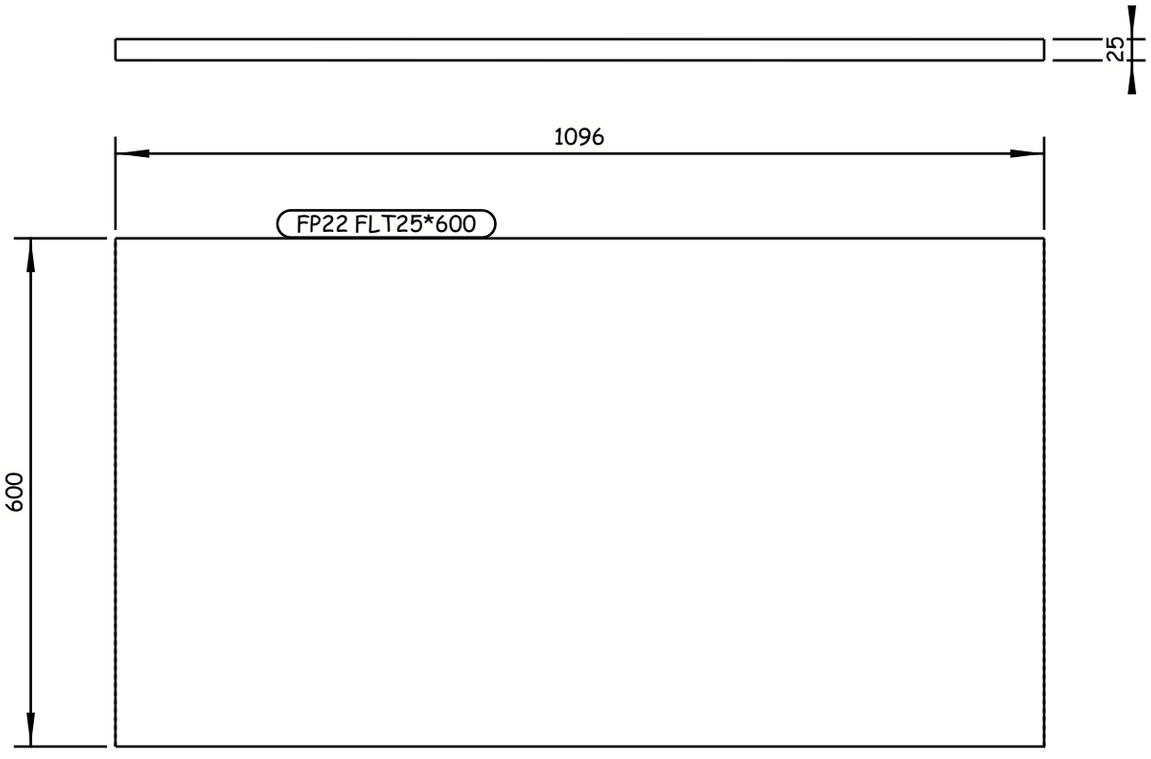

4 REQUIRED AS DRAWN E.SH FP22

GENERAL NOTES:

1. ALL DIMENSIONS ARE IN MILLIMETERS UNLESS OTHERWISE SPECIFIED.
2. LEVELS ARE IN METERS
3. DESIGN SERVICE LIFE OF 100 YEARS.
4. FLANGES OF TOP AND BOTTOM CHORDS TO BE SUPPLIED WITH IMPROVED THROUGH THICKNESS PROPERTIES Z25 ACCORDING TO EN10164.

REFERENCE DRAWINGS

1	93M-0407-SEN-6OL11-END-10118-B PAGE 01:17
2	
3	
4	
5	
6	
7	
8	
9	
10	
11	

6TH OF OCTOBER CITY RAIL TRANSIT MONORAIL &
NEW CAPITAL CITY RAIL TRANSIT MONORAIL

The Authority
Hill International
Authority Consultant

Main Contractor

Designer

CONTRACTOR
CONSULTANT :

ENGINEERING HOUSE FOR CONSULTANCY

6 October Monorail
Engineering Unit
Valid For Construction

SCALE	SHOP DRAWING	DATE
AS SHOWN		20.11.2024

REV	DATE	BY	DESCRIPTION	CHK	APD
A	20-11-24	M.SH	ISSUE FOR APPROVAL	A.SH	M.M

DRAWING TITLE:
6TH OF OCTOBER MONORAIL
SHOP DRAWING FOR BRIDGE 6OL11-37
STEEL TRUSS (I).
FP22

Project Code	Rubric	Initiator	Lot	Ref	Number	Revision
93M	0407	ACC	60L11	DWG	90059	A

Tekla structures

-Drawing shall be updated according to the comments on the GA drawing.
-Approval is subjected to the approval of coordination package between multi-discipline.

REVIEWED WITH COMMENT
MONORAILS PROJECT

All holes are 22mm U.N.O Length & Area & Weight per piece

Mark	Profile	Grade	QTY	Length	Area	Weight
FP23	PL40*720	S355J2N	2	9921.7	15.16	2194.6

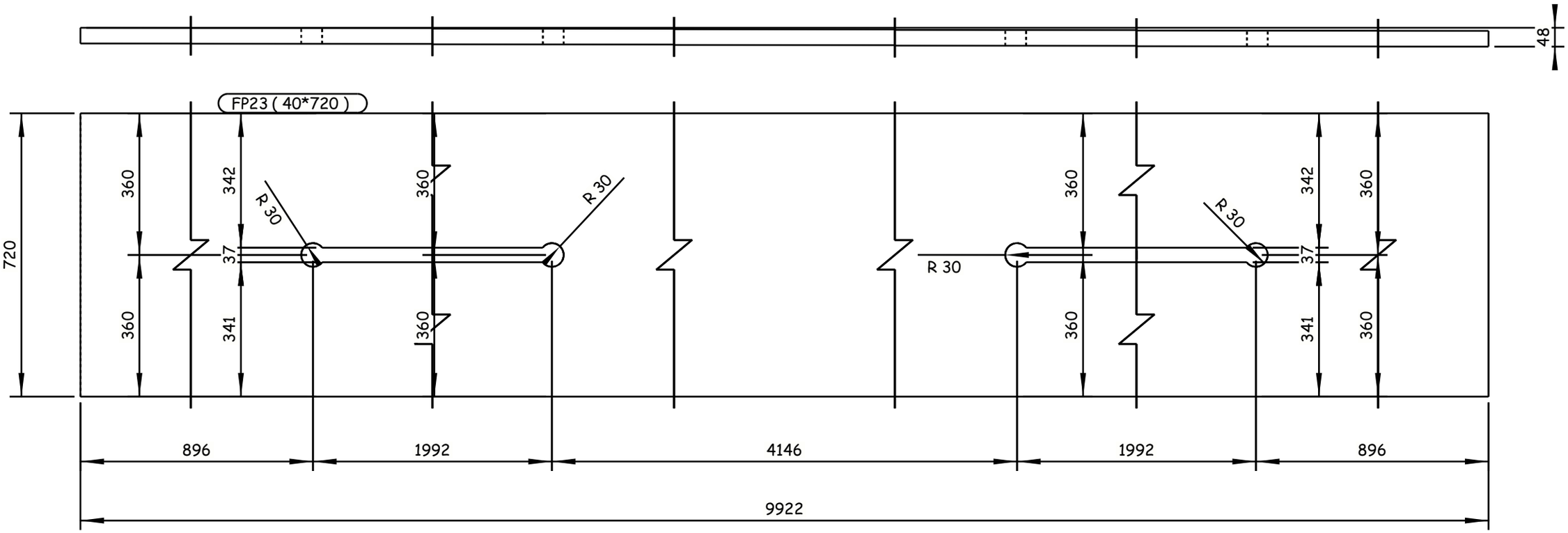

2 REQUIRED AS DRAWN E.SH FP23

Tekla structures

GENERAL NOTES:
1. ALL DIMENSIONS ARE IN MILLIMETERS UNLESS OTHERWISE SPECIFIED.
2. LEVELS ARE IN METERS
3. DESIGN SERVICE LIFE OF 100 YEARS.
4. FLANGES OF TOP AND BOTTOM CHORDS TO BE SUPPLIED WITH IMPROVED THROUGH THICKNESS PROPERTIES Z25 ACCORDING TO EN10164.

REFERENCE DRAWINGS

1	93M-0407-SEN-6OL11-END-10118-B PAGE 01:17
2	
3	
4	
5	
6	
7	
8	
9	
10	
11	

6TH OF OCTOBER CITY RAIL TRANSIT MONORAIL &
NEW CAPITAL CITY RAIL TRANSIT MONORAIL

The Authority
Hill International
Authority Consultant
Main Contractor
Designer

CONTRACTOR / CONSULTANT:
ENGINEERING HOUSE FOR CONSULTANCY

6 October Monorail
Engineering Unit
Valid For Construction

SCALE: AS SHOWN | CHK'D DRAWING | DATE: 20.11.2024

REV	DATE	BY	DESCRIPTION	CHK	APD
A	20-11-24	M.SH	ISSUE FOR APPROVAL	A.SH	M.M

DRAWING TITLE:
6TH OF OCTOBER MONORAIL
SHOP DRAWING FOR BRIDGE 6OL11-37
STEEL TRUSS (I).
FP23

Project Code	Rubric	Initiator	Lot	Ref	Number	Revision
93M	04	07	ACC	60L11	DWG	90060	A

-Drawing shall be updated according to the comments on the GA drawing.
-Approval is subjected to the approval of coordination package between multi-discipline.

REVIEWED WITH COMMENT
MONORAILS PROJECT

All holes are 22mm U.N.O Length & Area & Weight per piece

Mark	Profile	Grade	QTY	Length	Area	Weight
FP24	PL40*720	S355J2N	2	9919.9	15.14	2242.7

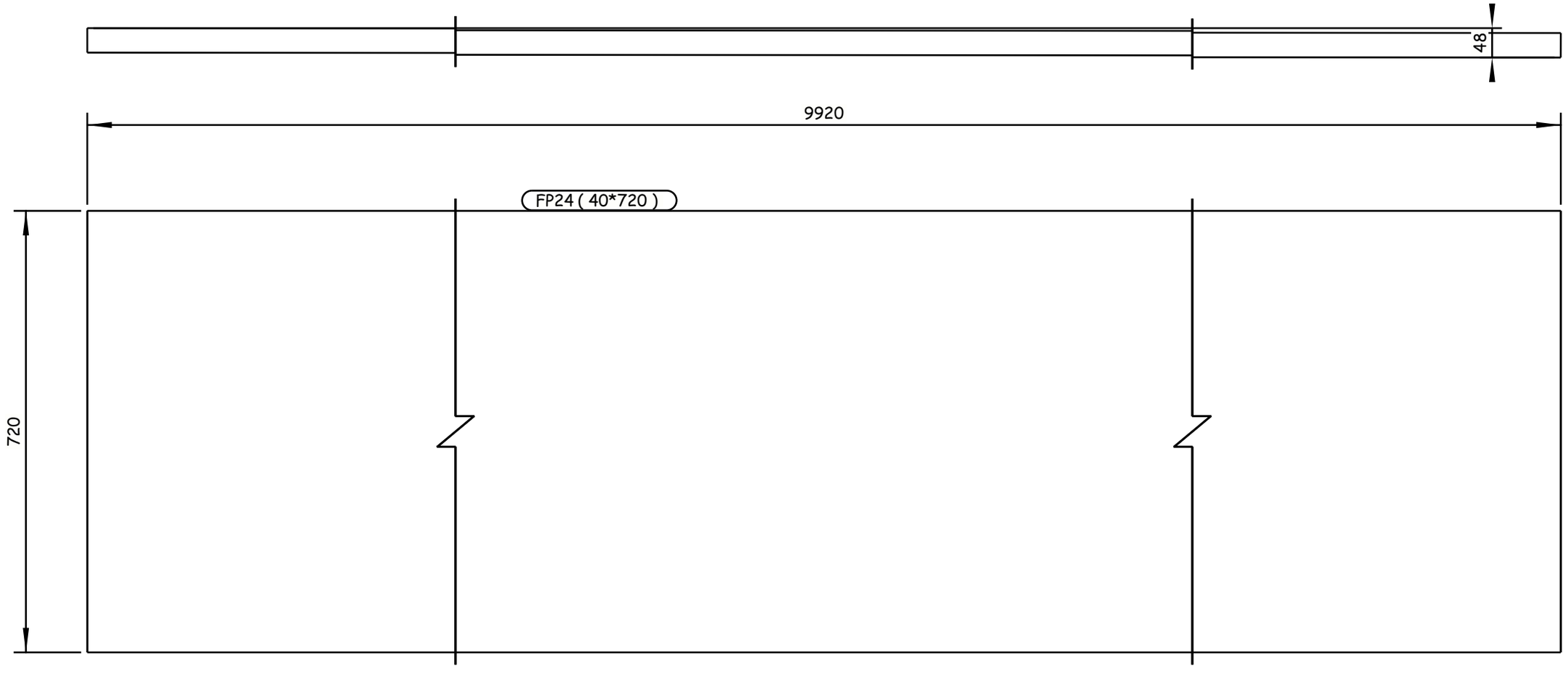

2 REQUIRED AS DRAWN E.SH FP24

6 October Monorail
Engineering Unit
Valid For Construction

Tekla structures

GENERAL NOTES:

1. ALL DIMENSIONS ARE IN MILLIMETERS UNLESS OTHERWISE SPECIFIED.
2. LEVELS ARE IN METERS
3. DESIGN SERVICE LIFE OF 100 YEARS.
4. FLANGES OF TOP AND BOTTOM CHORDS TO BE SUPPLIED WITH IMPROVED THROUGH THICKNESS PROPERTIES Z25 ACCORDING TO EN10164.

REFERENCE DRAWINGS

1	93M-0407-SEN-6OL11-END-10118-B PAGE 01:17
2	
3	
4	
5	
6	
7	
8	
9	
10	
11	

6TH OF OCTOBER CITY RAIL TRANSIT MONORAIL &
NEW CAPITAL CITY RAIL TRANSIT MONORAIL

The Authority
Hill International
Authority Consultant

ORASCOM CONSTRUCTION
Main Contractor

BOMBARDIER
SENER
SHAKER CONSULTANCY GROUP
Designer

CONTRACTOR / CONSULTANT:
ENGINEERING HOUSE FOR CONSULTANCY

SCALE: AS SHOWN | CHK'D DRAWING | DATE: 20.11.2024

REV	DATE	BY	DESCRIPTION	CHK	APD
A	20-11-24	M.SH	ISSUE FOR APPROVAL	A.SH	M.M

DRAWING TITLE:
6TH OF OCTOBER MONORAIL
SHOP DRAWING FOR BRIDGE 6OL11-37
STEEL TRUSS (I).
FP24

Project Code	Rubric	Initiator	Lot	Ref	Number	Revision
93M	0407	ACC	60L11	DWG	90061	A

-Drawing shall be updated according to the comments on the GA drawing.
-Approval is subjected to the approval of coordination package between multi-discipline.

REVIEWED WITH COMMENT
MONORAILS PROJECT

All holes are 22mm U.N.O Length & Area & Weight per piece

Mark	Profile	Grade	QTY	Length	Area	Weight
FP25	FLT20*400	S355J2N	4	3032.1	2.52	184.2

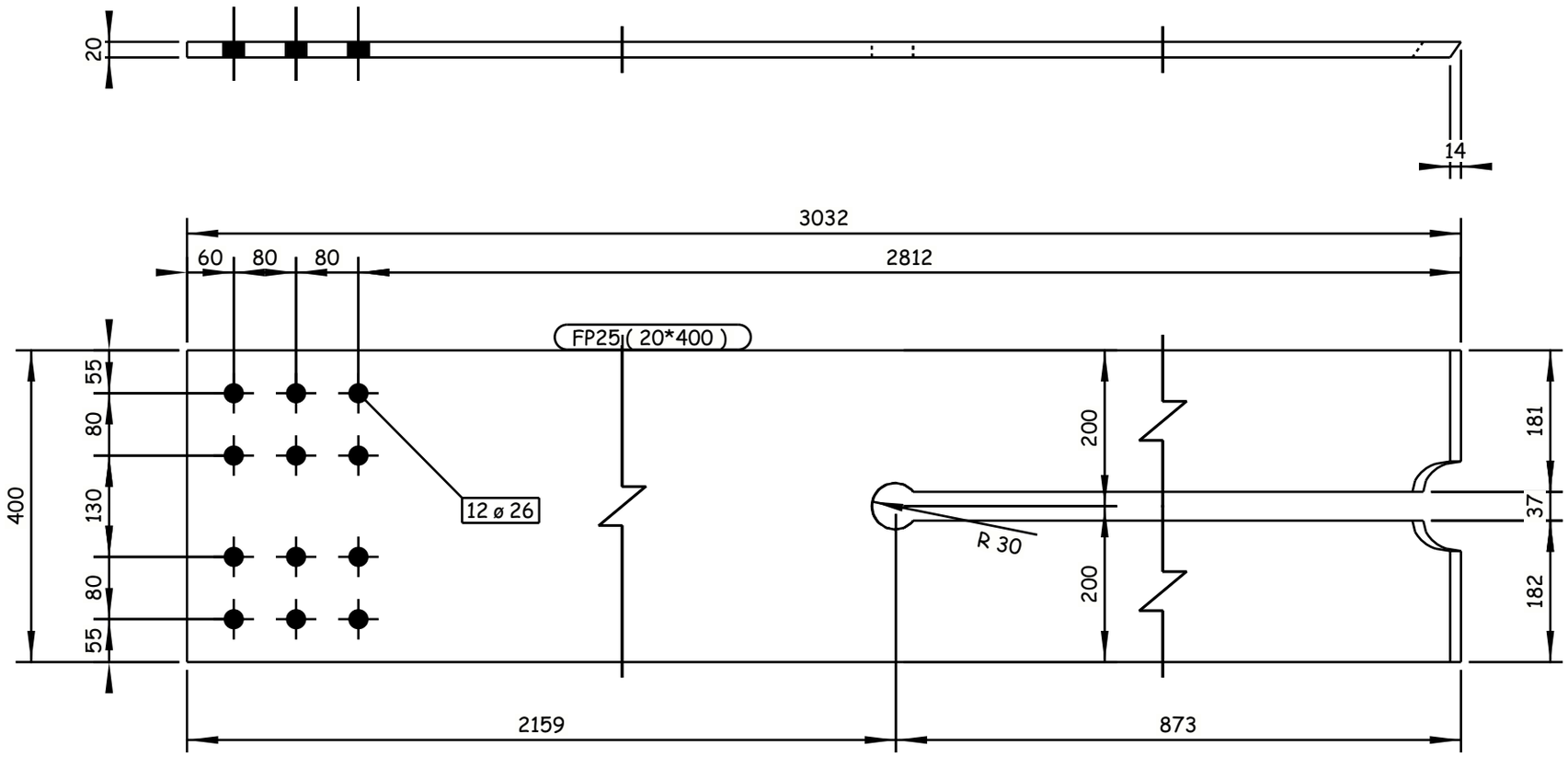

4 REQUIRED AS DRAWN E.SH FP25

Tekla structures

GENERAL NOTES:

1. ALL DIMENSIONS ARE IN MILLIMETERS UNLESS OTHERWISE SPECIFIED.
2. LEVELS ARE IN METERS
3. DESIGN SERVICE LIFE OF 100 YEARS.
4. FLANGES OF TOP AND BOTTOM CHORDS TO BE SUPPLIED WITH IMPROVED THROUGH THICKNESS PROPERTIES Z25 ACCORDING TO EN10164.

REFERENCE DRAWINGS

1	93M-0407-SEN-6OL11-END-10118-B PAGE 01:17
2	
3	
4	
5	
6	
7	
8	
9	
10	
11	

6TH OF OCTOBER CITY RAIL TRANSIT MONORAIL &
NEW CAPITAL CITY RAIL TRANSIT MONORAIL

The Authority
Hill International
Authority Consultant

ORASCOM CONSTRUCTION
Main Contractor

BOMBARDIER
SENER
SHAKER CONSULTING GROUP
Designer

CONTRACTOR / CONSULTANT :
ENGINEERING HOUSE FOR CONSULTANCY

6 October Monorail
Engineering Unit
Valid For Construction

SCALE	SHOP DRAWING	DATE
AS SHOWN		20.11.2024

REV	DATE	BY	DESCRIPTION	CHK	APD
A	20-11-24	M.SH	ISSUE FOR APPROVAL	A.SH	M.M

DRAWING TITLE:
6TH OF OCTOBER MONORAIL
SHOP DRAWING FOR BRIDGE 6OL11-37
STEEL TRUSS (I).
FP25

Project Code	Rubric	Initiator	Lot	Ref	Number	Revision
93M	0407	ACC	60L11	DWG	90062	A

-Drawing shall be updated according to the comments on the GA drawing.
-Approval is subjected to the approval of coordination package between multi-discipline.

REVIEWED WITH COMMENT
MONORAILS PROJECT

All holes are 22mm U.N.O Length & Area & Weight per piece

Mark	Profile	Grade	QTY	Length	Area	Weight
FP26	FLT20*400	S355J2N	4	2768.7	2.31	169.2

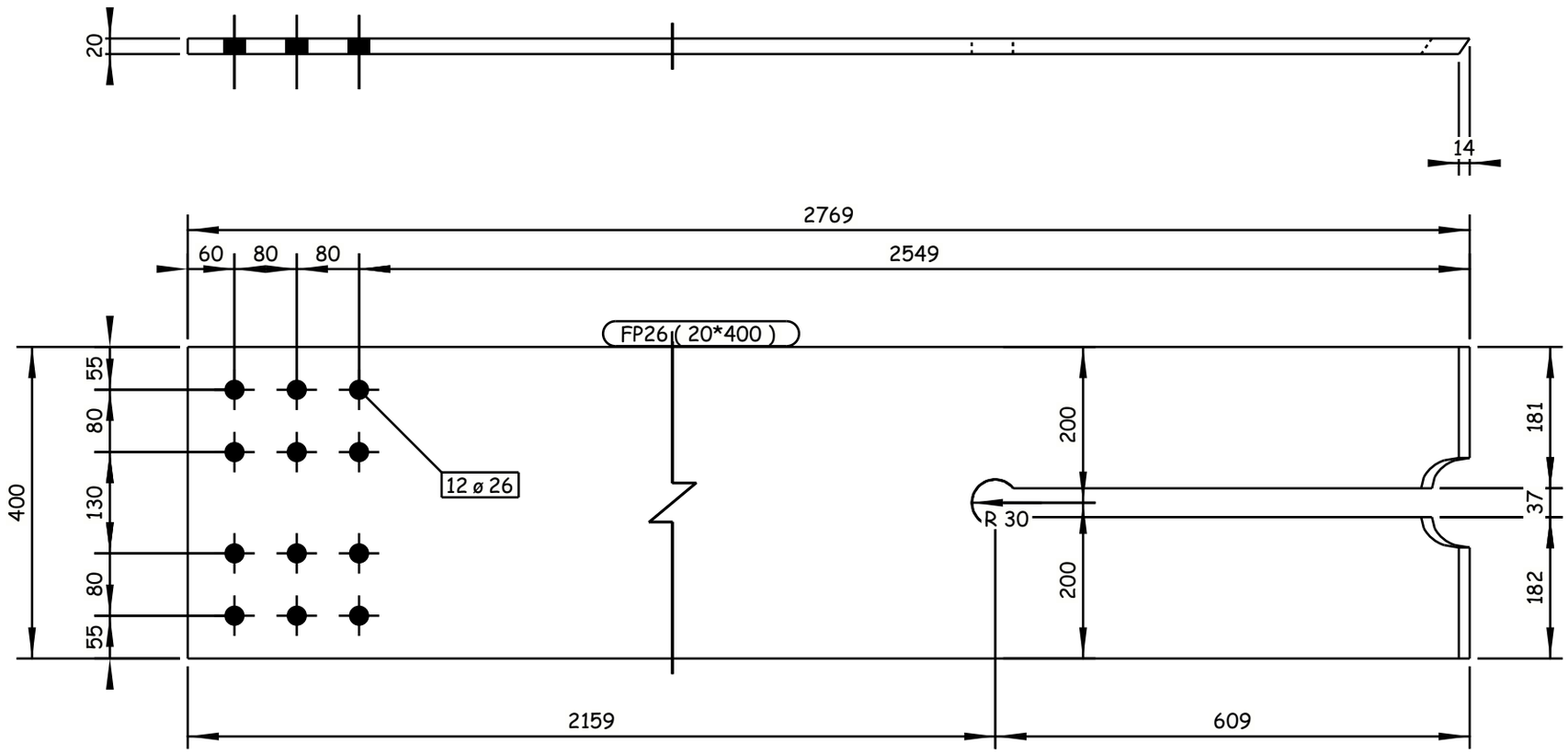

4 REQUIRED AS DRAWN E.SH FP26

6 October Monorail
Engineering Unit
Valid For Construction

GENERAL NOTES:

1. ALL DIMENSIONS ARE IN MILLIMETERS UNLESS OTHERWISE SPECIFIED.
2. LEVELS ARE IN METERS
3. DESIGN SERVICE LIFE OF 100 YEARS.
4. FLANGES OF TOP AND BOTTOM CHORDS TO BE SUPPLIED WITH IMPROVED THROUGH THICKNESS PROPERTIES Z25 ACCORDING TO EN10164.

REFERENCE DRAWINGS

1	93M-0407-SEN-6OL11-END-10118-B PAGE 01:17
2	
3	
4	
5	
6	
7	
8	
9	
10	
11	

6TH OF OCTOBER CITY RAIL TRANSIT MONORAIL &
NEW CAPITAL CITY RAIL TRANSIT MONORAIL

The Authority
Hill International
Authority Consultant

Main Contractor

Designer

CONTRACTOR / CONSULTANT :

ENGINEERING HOUSE FOR CONSULTANCY

SCALE: AS SHOWN | CHD DRAWING | DATE: 20.11.2024

REV	DATE	BY	DESCRIPTION	CHK	APD
A	20-11-24	M.SH	ISSUE FOR APPROVAL	A.SH	M.M

DRAWING TITLE:
6TH OF OCTOBER MONORAIL
SHOP DRAWING FOR BRIDGE 6OL11-37
STEEL TRUSS (I).
FP26

Project Code	Rubric	Initiator	Lot	Ref	Number	Revision
93M	0407	ACC	6OL11	DWG	90063	A

Tekla structures

-Drawing shall be updated according to the comments on the GA drawing.
-Approval is subjected to the approval of coordination package between multi-discipline.

REVIEWED WITH COMMENT
MONORAILS PROJECT

All holes are 22mm U.N.O Length & Area & Weight per piece

Mark	Profile	Grade	QTY	Length	Area	Weight
FP27	FLT30*600	S355J2N	2	15087.4	18.95	2072.7

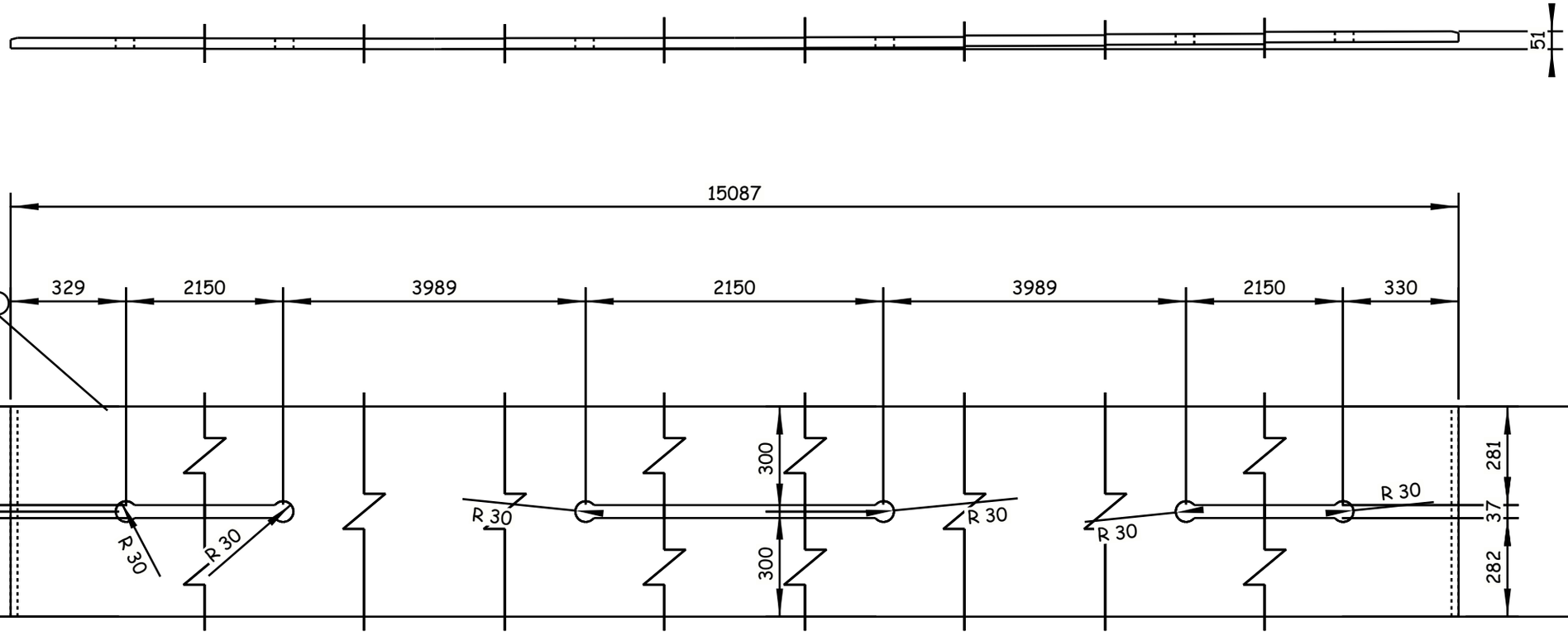

2 REQUIRED AS DRAWN E.SH FP27

GENERAL NOTES:

1. ALL DIMENSIONS ARE IN MILLIMETERS UNLESS OTHERWISE SPECIFIED.
2. LEVELS ARE IN METERS
3. DESIGN SERVICE LIFE OF 100 YEARS.
4. FLANGES OF TOP AND BOTTOM CHORDS TO BE SUPPLIED WITH IMPROVED THROUGH THICKNESS PROPERTIES Z25 ACCORDING TO EN10164.

REFERENCE DRAWINGS

1	93M-0407-SEN-6OL11-END-10118-B PAGE 01:17
2	
3	
4	
5	
6	
7	
8	
9	
10	
11	

6TH OF OCTOBER CITY RAIL TRANSIT MONORAIL &
NEW CAPITAL CITY RAIL TRANSIT MONORAIL

The Authority
Hill International
Authority Consultant
Main Contractor
Designer

CONTRACTOR / CONSULTANT:
ENGINEERING HOUSE FOR CONSULTANCY

6 October Monorail Engineering Unit
Valid For Cönstruction

SCALE: AS SHOWN | SHOP DRAWING | DATE: 20.11.2024

REV	DATE	BY	DESCRIPTION	CHK	APD
A	20-11-24	M.SH	ISSUE FOR APPROVAL	A.SH	M.M

DRAWING TITLE:
6TH OF OCTOBER MONORAIL
SHOP DRAWING FOR BRIDGE 6OL11-37
STEEL TRUSS (I).
FP27

Project Code	Rubric	Initiator	Lot	Ref	Number	Revision
93M	0407	ACC	60L11	DWG	90064	A

Tekla structures

-Drawing shall be updated according to the comments on the GA drawing.
-Approval is subjected to the approval of coordination package between multi-discipline.

REVIEWED WITH COMMENT MONORAILS PROJECT

All holes are 22mm U.N.O Length & Area & Weight per piece

Mark	Profile	Grade	QTY	Length	Area	Weight
FP28	FLT30*600	S355J2N	2	15085.1	18.92	2056.8

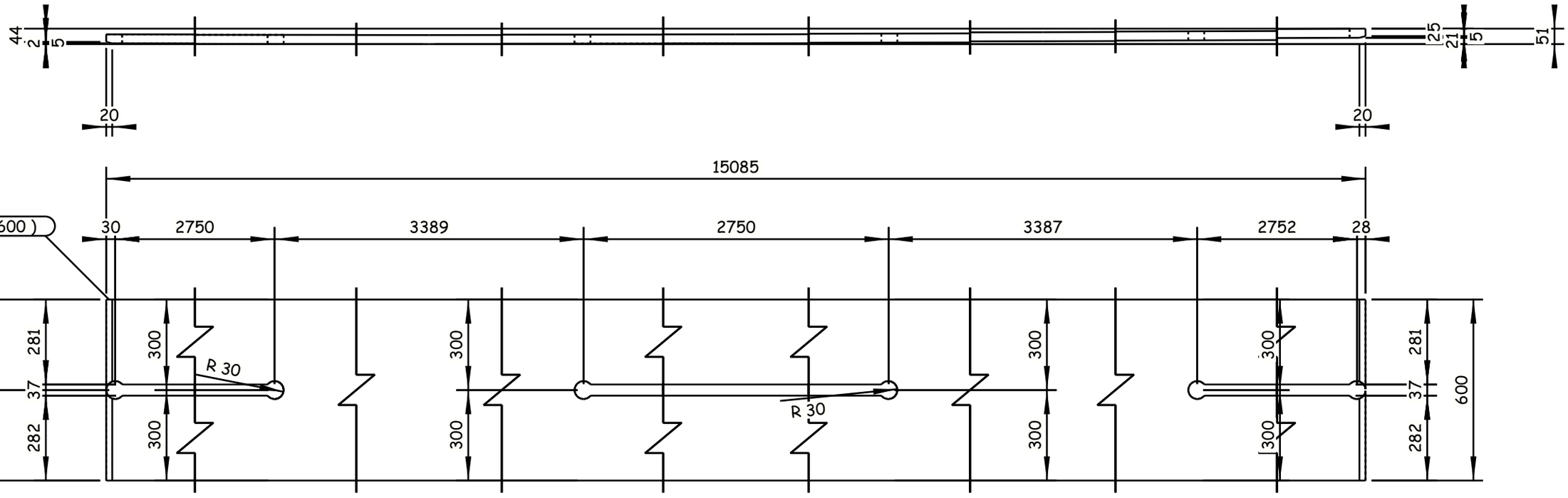

2 REQUIRED AS DRAWN E.SH FP28

6 October Monorail Engineering Unit
Valid For Construction

GENERAL NOTES:
1. ALL DIMENSIONS ARE IN MILLIMETERS UNLESS OTHERWISE SPECIFIED.
2. LEVELS ARE IN METERS
3. DESIGN SERVICE LIFE OF 100 YEARS.
4. FLANGES OF TOP AND BOTTOM CHORDS TO BE SUPPLIED WITH IMPROVED THROUGH THICKNESS PROPERTIES Z25 ACCORDING TO EN10164.

REFERENCE DRAWINGS

1	93M-0407-SEN-6OL11-END-10118-B PAGE 01:17
2	
3	
4	
5	
6	
7	
8	
9	
10	
11	

6TH OF OCTOBER CITY RAIL TRANSIT MONORAIL & NEW CAPITAL CITY RAIL TRANSIT MONORAIL

وزارة النقل MINISTRY OF TRANSPORT
The Authority
Hill International
Authority Consultant

ORASCOM CONSTRUCTION
BOMBARDIER
Main Contractor

SENER
SHAKER CONSULTANCY GROUP
Designer

CONTRACTOR CONSULTANT:
HEHC
ENGINEERING HOUSE FOR CONSULTANCY

SCALE AS SHOWN	SHOP DRAWING	DATE 20.11.2024

REV	DATE	BY	DESCRIPTION	CHK	APD
A	20-11-24	M.SH	ISSUE FOR APPROVAL	A.SH	M.M

DRAWING TITLE:
6TH OF OCTOBER MONORAIL
SHOP DRAWING FOR BRIDGE 6OL11-37
STEEL TRUSS (I).
FP28

Project Code	Rubric	Initiator	Lot	Ref	Number	Revision
93M	0407	ACC	6OL11	DWG	90065	A

Tekla structures

-Drawing shall be updated according to the comments on the GA drawing.
-Approval is subjected to the approval of coordination package between multi-discipline.

REVIEWED WITH COMMENT
MONORAILS PROJECT

All holes are 22mm U.N.O Length & Area & Weight per piece

Mark	Profile	Grade	QTY	Length	Area	Weight
FP29	FLT25*600	S355J2N	2	14279.2	17.72	1634.7

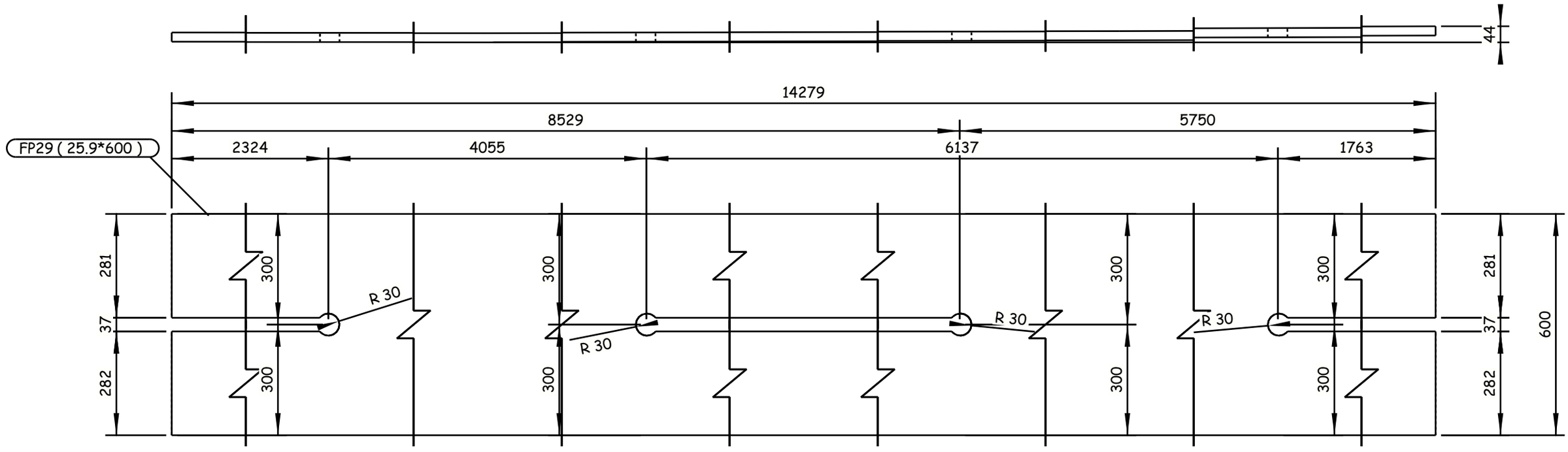

2 REQUIRED AS DRAWN E.SH FP29

6 October Monorail
Engineering Unit
Valid For Construction

GENERAL NOTES:

1. ALL DIMENSIONS ARE IN MILLIMETERS UNLESS OTHERWISE SPECIFIED.
2. LEVELS ARE IN METERS
3. DESIGN SERVICE LIFE OF 100 YEARS.
4. FLANGES OF TOP AND BOTTOM CHORDS TO BE SUPPLIED WITH IMPROVED THROUGH THICKNESS PROPERTIES Z25 ACCORDING TO EN10164.

REFERENCE DRAWINGS

1	93M-0407-SEN-6OL11-END-10118-B PAGE 01:17
2	
3	
4	
5	
6	
7	
8	
9	
10	
11	

6TH OF OCTOBER CITY RAIL TRANSIT MONORAIL &
NEW CAPITAL CITY RAIL TRANSIT MONORAIL

The Authority | Hill International Authority Consultant | Main Contractor | Designer

CONTRACTOR & CONSULTANT:
ENGINEERING HOUSE FOR CONSULTANCY

SCALE: AS SHOWN | SHOP DRAWING | DATE: 20.11.2024

DRAWING TITLE:
6TH OF OCTOBER MONORAIL
SHOP DRAWING FOR BRIDGE 6OL11-37
STEEL TRUSS (I).
FP29

REV	DATE	BY	DESCRIPTION	CHK	APD
A	20-11-24	M.SH	ISSUE FOR APPROVAL	A.SH	M.M

Project Code	Rubric	Initiator	Lot	Ref	Number	Revision
93M	0407	ACC	6OL11	DWG	90066	A

Tekla structures

-Drawing shall be updated according to the comments on the GA drawing.
-Approval is subjected to the approval of coordination package between multi-discipline.

REVIEWED WITH COMMENT
MONORAILS PROJECT

All holes are 22mm U.N.O Length & Area & Weight per piece

Mark	Profile	Grade	QTY	Length	Area	Weight
FP30	FLT25*600	S355J2N	2	15757.6	19.52	1793.9

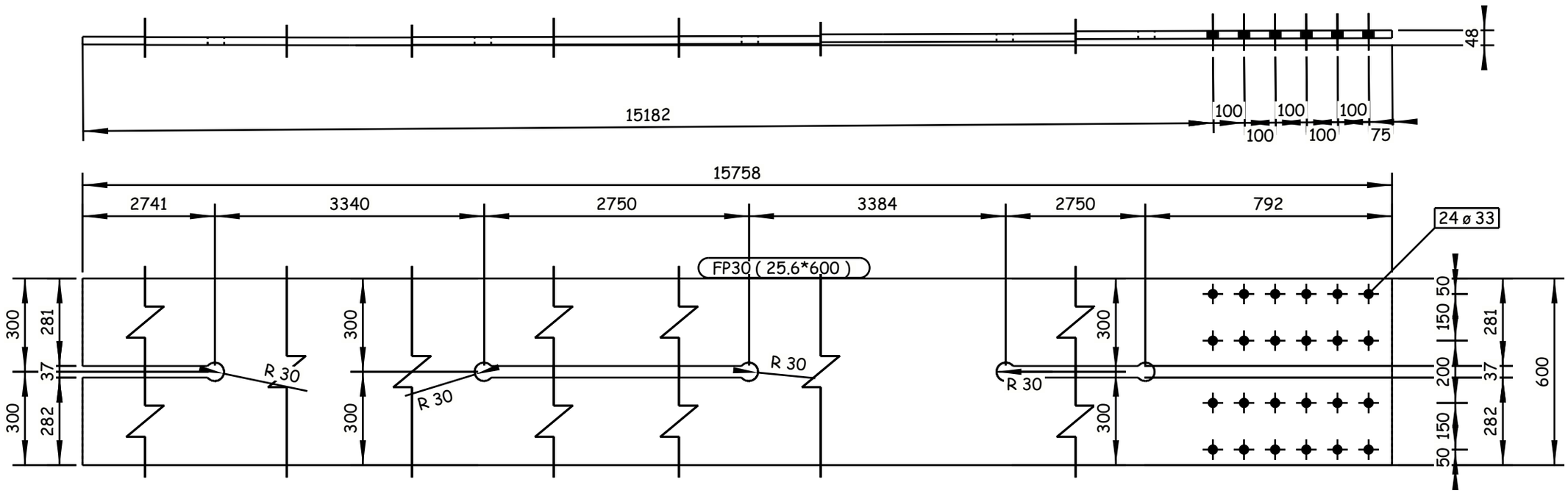

2 REQUIRED AS DRAWN E.SH FP30

GENERAL NOTES:

1. ALL DIMENSIONS ARE IN MILLIMETERS UNLESS OTHERWISE SPECIFIED.
2. LEVELS ARE IN METERS
3. DESIGN SERVICE LIFE OF 100 YEARS.
4. FLANGES OF TOP AND BOTTOM CHORDS TO BE SUPPLIED WITH IMPROVED THROUGH THICKNESS PROPERTIES Z25 ACCORDING TO EN10164.

REFERENCE DRAWINGS

1	93M-0407-SEN-6OL11-END-10118-B PAGE 01:17
2	
3	
4	
5	
6	
7	
8	
9	
10	
11	

6TH OF OCTOBER CITY RAIL TRANSIT MONORAIL &
NEW CAPITAL CITY RAIL TRANSIT MONORAIL

The Authority
Hill International
Authority Consultant

Main Contractor

Designer

CONTRACTOR & CONSULTANT:
ENGINEERING HOUSE FOR CONSULTANCY

SCALE: AS SHOWN
CHD DRAWING
DATE: 20.11.2024

6 October Monorail
Engineering Unit
Valid For Construction

REV	DATE	BY	DESCRIPTION	CHK	APD
A	20-11-24	M.SH	ISSUE FOR APPROVAL	A.SH	M.M

DRAWING TITLE:
6TH OF OCTOBER MONORAIL
SHOP DRAWING FOR BRIDGE 6OL11-37
STEEL TRUSS (I).
FP30

Project Code	Rubric	Initiator	Lot	Ref	Number	Revision
9 3 M	0 4 0 7	A C C	6 0 L 1 1	D W G	90067	A

Tekla structures

-Drawing shall be updated according to the comments on the GA drawing.
-Approval is subjected to the approval of coordination package between multi-discipline.

REVIEWED WITH COMMENT
MONORAILS PROJECT

All holes are 22mm U.N.O Length & Area & Weight per piece

Mark	Profile	Grade	QTY	Length	Area	Weight
FP31	FLT35*400	S355J2N	2	4023.2	3.49	418.0

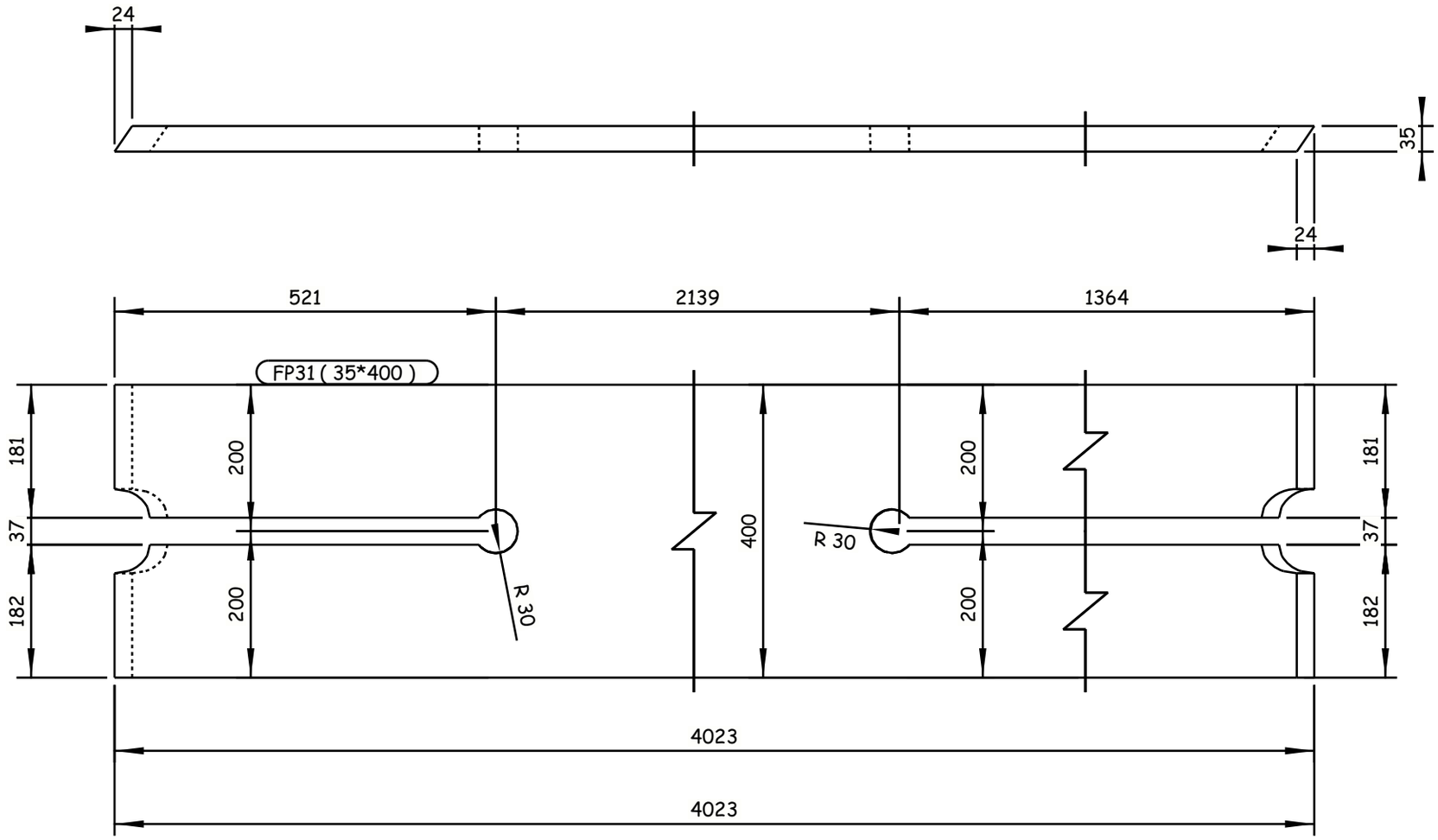

2 REQUIRED AS DRAWN E.SH FP31

Tekla structures

GENERAL NOTES:

1. ALL DIMENSIONS ARE IN MILLIMETERS UNLESS OTHERWISE SPECIFIED.
2. LEVELS ARE IN METERS
3. DESIGN SERVICE LIFE OF 100 YEARS.
4. FLANGES OF TOP AND BOTTOM CHORDS TO BE SUPPLIED WITH IMPROVED THROUGH THICKNESS PROPERTIES Z25 ACCORDING TO EN10164.

REFERENCE DRAWINGS

1	93M-0407-SEN-6OL11-END-10118-B PAGE 01:17
2	
3	
4	
5	
6	
7	
8	
9	
10	
11	

6TH OF OCTOBER CITY RAIL TRANSIT MONORAIL &
NEW CAPITAL CITY RAIL TRANSIT MONORAIL

The Authority
Hill International
Authority Consultant

Main Contractor

Designer

CONTRACTOR & CONSULTANT:
ENGINEERING HOUSE FOR CONSULTANCY

6 October Monorail
Engineering Unit
Valid For Construction

SCALE: AS SHOWN | CHD DRAWING | DATE: 20.11.2024

DRAWING TITLE:
6TH OF OCTOBER MONORAIL
SHOP DRAWING FOR BRIDGE 6OL11-37
STEEL TRUSS (I).
FP31

REV	DATE	BY	DESCRIPTION	CHK	APD
A	20-11-24	M.SH	ISSUE FOR APPROVAL	A.SH	M.M

Project Code	Rubric	Initiator	Lot	Ref	Number	Revision
93M0407	ACC	6OL11	DWG	90068	A

-Drawing shall be updated according to the comments on the GA drawing.
-Approval is subjected to the approval of coordination package between multi-discipline.

REVIEWED WITH COMMENT
MONORAILS PROJECT

All holes are 22mm U.N.O Length & Area & Weight per piece

Mark	Profile	Grade	QTY	Length	Area	Weight
FP32	FLT35*400	S355J2N	2	4023.9	3.49	418.1

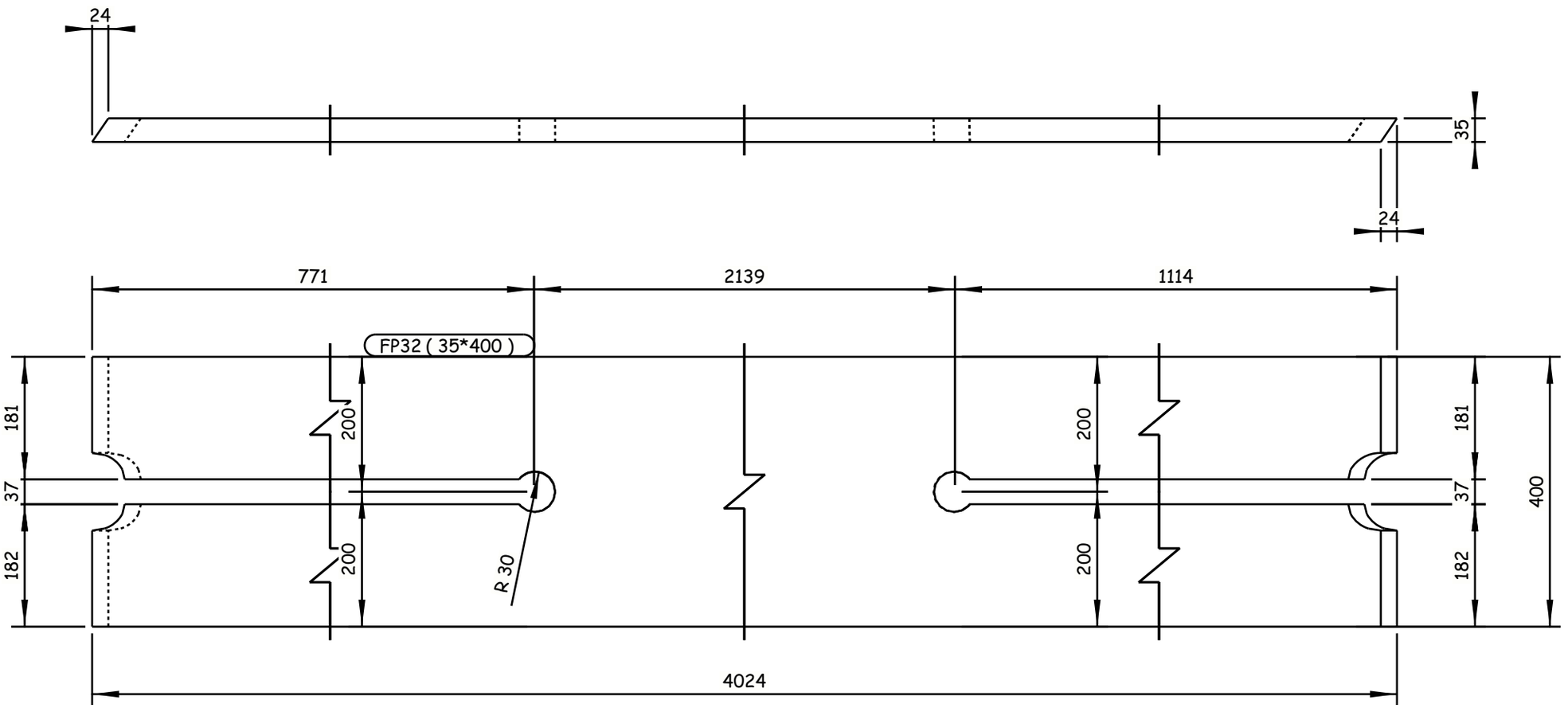

2 REQUIRED AS DRAWN E.SH FP32

GENERAL NOTES:

1. ALL DIMENSIONS ARE IN MILLIMETERS UNLESS OTHERWISE SPECIFIED.
2. LEVELS ARE IN METERS
3. DESIGN SERVICE LIFE OF 100 YEARS.
4. FLANGES OF TOP AND BOTTOM CHORDS TO BE SUPPLIED WITH IMPROVED THROUGH THICKNESS PROPERTIES Z25 ACCORDING TO EN10164.

REFERENCE DRAWINGS

1	93M-0407-SEN-6OL11-END-10118-B PAGE 01:17
2	
3	
4	
5	
6	
7	
8	
9	
10	
11	

6TH OF OCTOBER CITY RAIL TRANSIT MONORAIL &
NEW CAPITAL CITY RAIL TRANSIT MONORAIL

The Authority
Hill International
Authority Consultant

ORASCOM CONSTRUCTION
BOMBARDIER
Main Contractor

SENER
SHAKER CONSULTANCY GROUP
Designer

CONTRACTOR / CONSULTANT :
ENGINEERING HOUSE FOR CONSULTANCY

6 October Monorail
Engineering Unit
Valid For Construction

REV	DATE	BY	DESCRIPTION	CHK	APD
A	20-11-24	M.SH	ISSUE FOR APPROVAL	A.SH	M.M

SCALE: AS SHOWN | SHD DRAWING | DATE: 20.11.2024

DRAWING TITLE:
6TH OF OCTOBER MONORAIL
SHOP DRAWING FOR BRIDGE 6OL11-37
STEEL TRUSS (I).
FP32

Project Code	Rubric	Initiator	Lot	Ref	Number	Revision
93M	04 07	ACC	60L11	DWG	90069	A

Tekla structures

-Drawing shall be updated according to the comments on the GA drawing.
-Approval is subjected to the approval of coordination package between multi-discipline.

REVIEWED WITH COMMENT
MONORAILS PROJECT

All holes are 22mm U.N.O Length & Area & Weight per piece

Mark	Profile	Grade	QTY	Length	Area	Weight
GP1	PL35*1614.8	S355J2N	2	2810.2	7.22	940.5

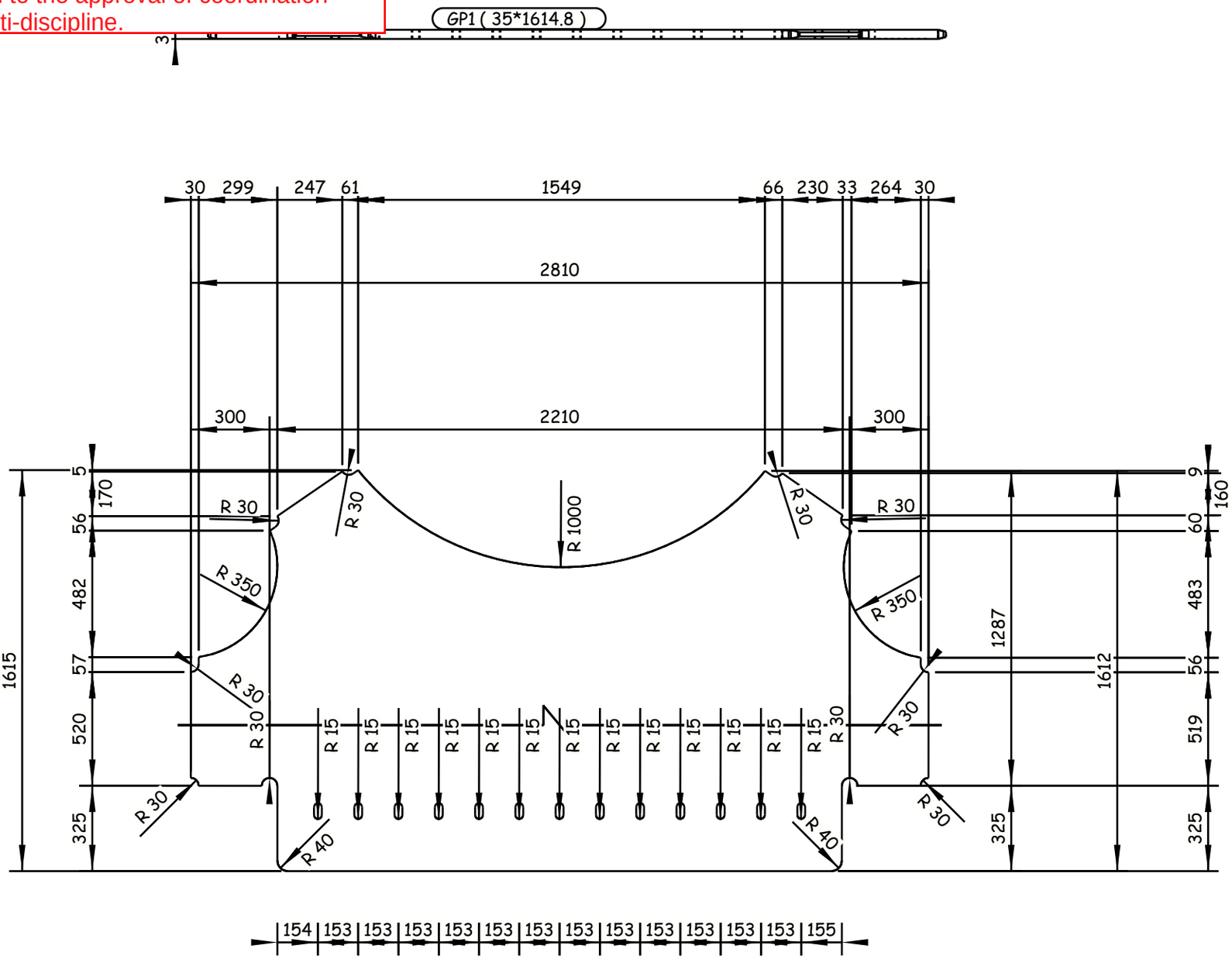

2 REQUIRED AS DRAWN E.SH GP1

6 October Monorail
Engineering Unit
Valid For Construction

GENERAL NOTES:

1. ALL DIMENSIONS ARE IN MILLIMETERS UNLESS OTHERWISE SPECIFIED.
2. LEVELS ARE IN METERS
3. DESIGN SERVICE LIFE OF 100 YEARS.
4. FLANGES OF TOP AND BOTTOM CHORDS TO BE SUPPLIED WITH IMPROVED THROUGH THICKNESS PROPERTIES Z25 ACCORDING TO EN10164.

REFERENCE DRAWINGS

1	93M-0407-SEN-6OL11-END-10118-B PAGE 01:17
2	
3	
4	
5	
6	
7	
8	
9	
10	
11	

6TH OF OCTOBER CITY RAIL TRANSIT MONORAIL &
NEW CAPITAL CITY RAIL TRANSIT MONORAIL

The Authority | Hill International Authority Consultant | Main Contractor | Designer

CONTRACTOR / CONSULTANT :

ENGINEERING HOUSE FOR CONSULTANCY

SCALE: AS SHOWN | CHD DRAWING | DATE: 20.11.2024

DRAWING TITLE:
6TH OF OCTOBER MONORAIL
SHOP DRAWING FOR BRIDGE 6OL11-37
STEEL TRUSS (I).
GP1

REV	DATE	BY	DESCRIPTION	CHK	APD
A	20-11-24	M.SH	ISSUE FOR APPROVAL	A.SH	M.M

Project Code	Rubric	Initiator	Lot	Ref	Number	Revision
93M	407	ACC	60L11	DWG	90070	A

Tekla structures

-Drawing shall be updated according to the comments on the GA drawing.
-Approval is subjected to the approval of coordination package between multi-discipline.

REVIEWED WITH COMMENT
MONORAILS PROJECT

All holes are 22mm U.N.O Length & Area & Weight per piece

Mark	Profile	Grade	QTY	Length	Area	Weight
GP2	PL35*1614.8	S355J2N	1	2810.2	7.22	940.7

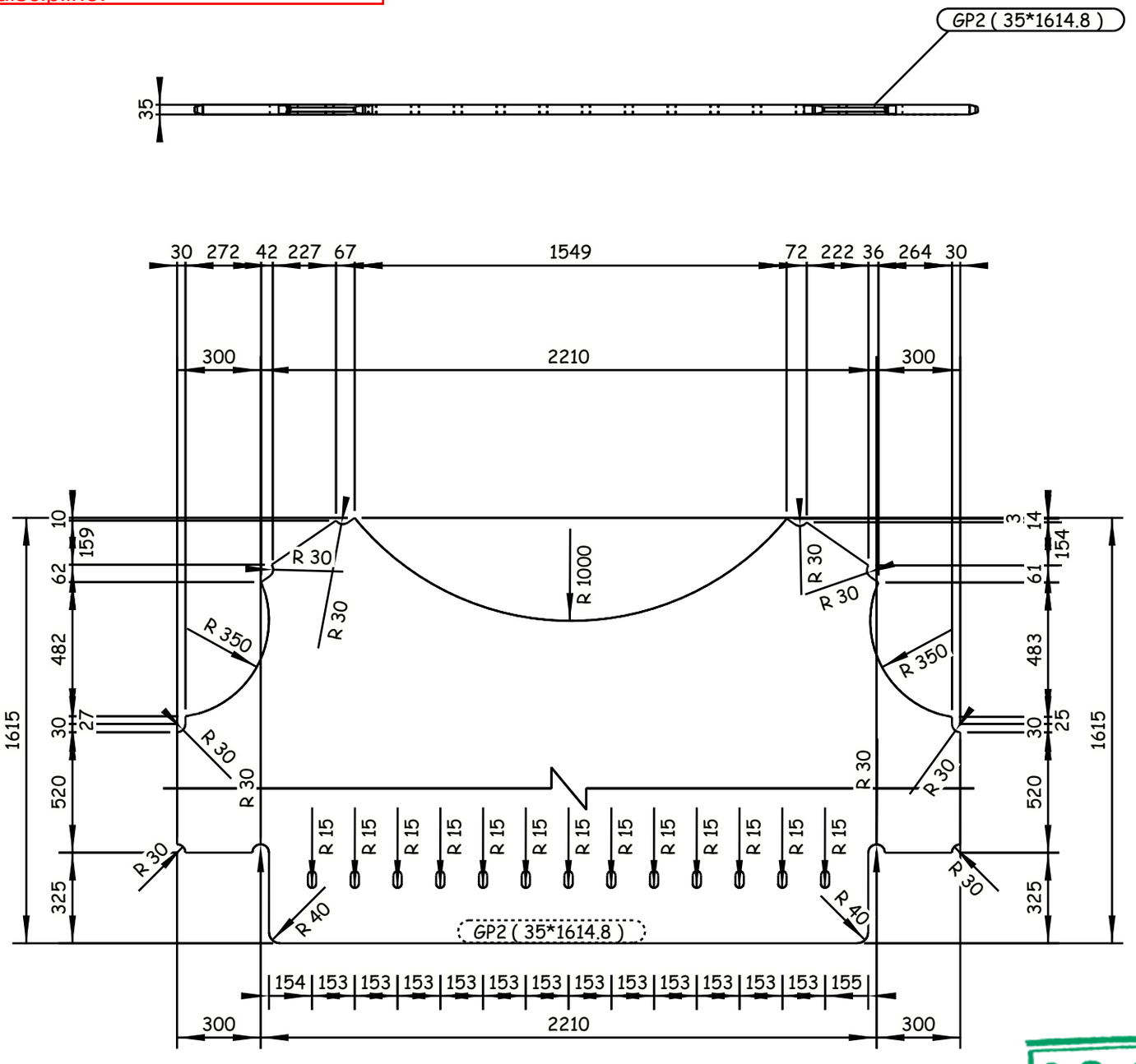

1 REQUIRED AS DRAWN E.SH GP2

GENERAL NOTES:

1. ALL DIMENSIONS ARE IN MILLIMETERS UNLESS OTHERWISE SPECIFIED.
2. LEVELS ARE IN METERS
3. DESIGN SERVICE LIFE OF 100 YEARS.
4. FLANGES OF TOP AND BOTTOM CHORDS TO BE SUPPLIED WITH IMPROVED THROUGH THICKNESS PROPERTIES Z25 ACCORDING TO EN10164.

REFERENCE DRAWINGS

1	93M-0407-SEN-6OL11-END-10118-B PAGE 01:17
2	
3	
4	
5	
6	
7	
8	
9	
10	
11	

6TH OF OCTOBER CITY RAIL TRANSIT MONORAIL &
NEW CAPITAL CITY RAIL TRANSIT MONORAIL

The Authority | Hill International Authority Consultant | ORASCOM CONSTRUCTION | BOMBARDIER (Main Contractor) | SENER | SHAKER CONSULTANCY GROUP (Designer)

CONTRACTOR & CONSULTANT:
ENGINEERING HOUSE FOR CONSULTANCY

6 October Monorail
Engineering Unit
Valid For Construction

SCALE: AS SHOWN | SHOP DRAWING | DATE: 20.11.2024

DRAWING TITLE:
6TH OF OCTOBER MONORAIL
SHOP DRAWING FOR BRIDGE 6OL11-37
STEEL TRUSS (I).
GP2

REV	DATE	BY	DESCRIPTION	CHK	APD
A	20-11-24	M.SH	ISSUE FOR APPROVAL	A.SH	M.M

Project Code	Rubric	Initiator	Lot	Ref	Number	Revision
93M	0407	ACC	6OL11	DWG	90071	A

Tekla structures

-Drawing shall be updated according to the comments on the GA drawing.
-Approval is subjected to the approval of coordination package between multi-discipline.

REVIEWED WITH COMMENT
MONORAILS PROJECT

All holes are 22mm U.N.O Length & Area & Weight per piece

Mark	Profile	Grade	QTY	Length	Area	Weight
GP3	PL35*1619.3	S355J2N	4	2810.2	7.23	942.1

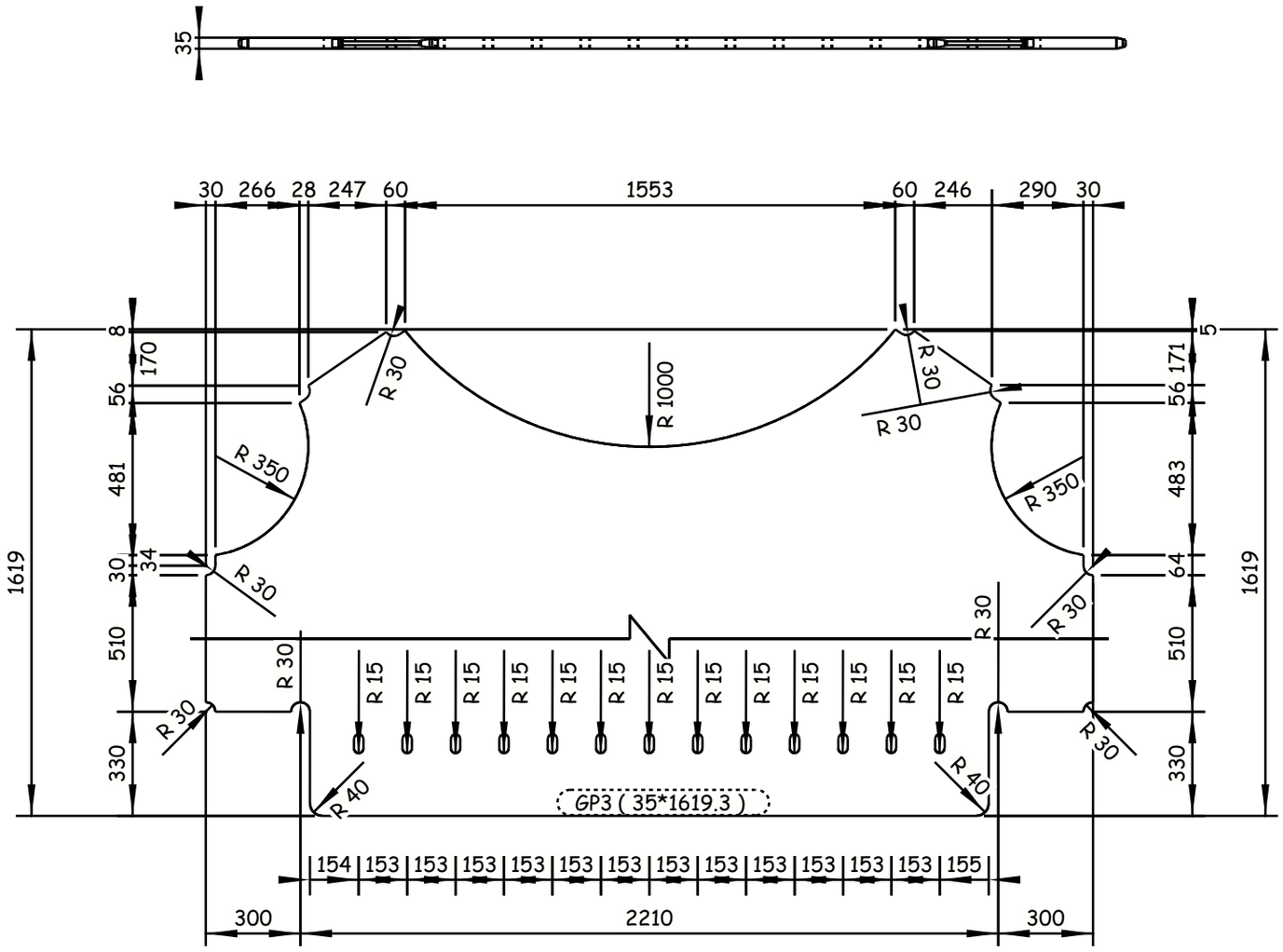

4 REQUIRED AS DRAWN E.SH GP3

6 October Monorail
Engineering Unit
Valid For Construction

GENERAL NOTES:

1. ALL DIMENSIONS ARE IN MILLIMETERS UNLESS OTHERWISE SPECIFIED.
2. LEVELS ARE IN METERS
3. DESIGN SERVICE LIFE OF 100 YEARS.
4. FLANGES OF TOP AND BOTTOM CHORDS TO BE SUPPLIED WITH IMPROVED THROUGH THICKNESS PROPERTIES Z25 ACCORDING TO EN10164.

REFERENCE DRAWINGS

1	93M-0407-SEN-6OL11-END-10118-B PAGE 01:17
2	
3	
4	
5	
6	
7	
8	
9	
10	
11	

6TH OF OCTOBER CITY RAIL TRANSIT MONORAIL &
NEW CAPITAL CITY RAIL TRANSIT MONORAIL

The Authority — Hill International — Authority Consultant
ORASCOM CONSTRUCTION — BOMBARDIER — Main Contractor
SENER — SHAKER CONSULTANCY GROUP — Designer

CONTRACTOR / CONSULTANT:
ENGINEERING HOUSE FOR CONSULTANCY

SCALE: AS SHOWN | SHD/DRAWING | DATE: 20.11.2024

DRAWING TITLE:
6TH OF OCTOBER MONORAIL
SHOP DRAWING FOR BRIDGE 6OL11-37
STEEL TRUSS (I).
GP3

REV	DATE	BY	DESCRIPTION	CHK	APD
A	20-11-24	M.SH	ISSUE FOR APPROVAL	A.SH	M.M

Project Code	Rubric	Initiator	Lot	Ref	Number	Revision
93M	0407	ACC	60L11	DWG	90072	A

Tekla structures

-Drawing shall be updated according to the comments on the GA drawing.
-Approval is subjected to the approval of coordination package between multi-discipline.

REVIEWED WITH COMMENT
MONORAILS PROJECT

All holes are 22mm U.N.O Length & Area & Weight per piece

Mark	Profile	Grade	QTY	Length	Area	Weight
GP4	PL35*1619.3	S355J2N	2	2810.2	7.23	942.1

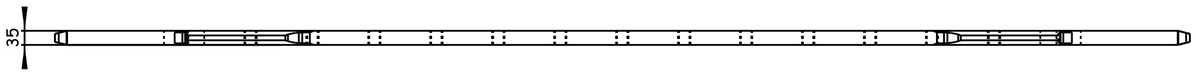

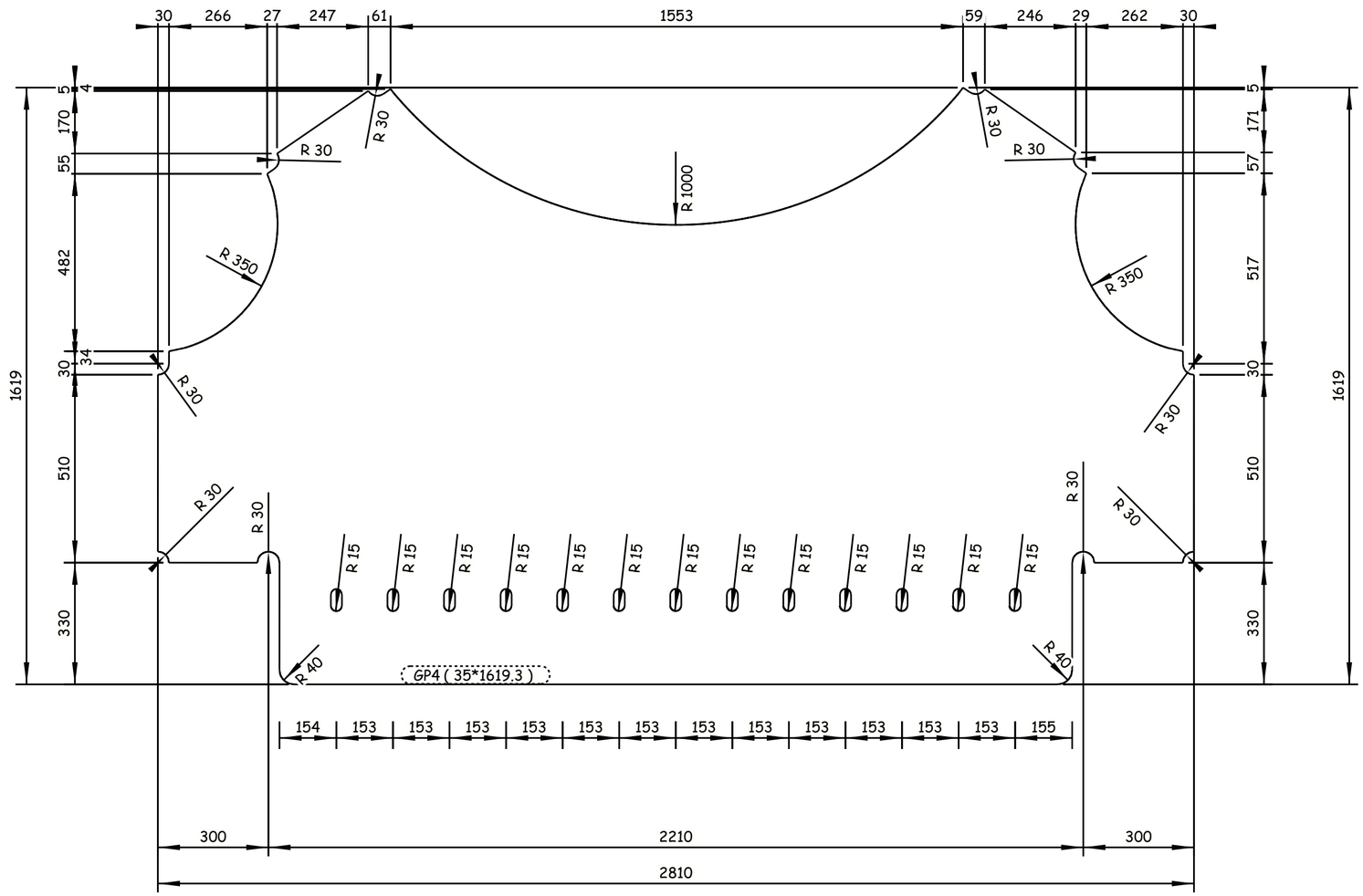

2 REQUIRED AS DRAWN E.SH GP4

GENERAL NOTES:

1. ALL DIMENSIONS ARE IN MILLIMETERS UNLESS OTHERWISE SPECIFIED.
2. LEVELS ARE IN METERS
3. DESIGN SERVICE LIFE OF 100 YEARS.
4. FLANGES OF TOP AND BOTTOM CHORDS TO BE SUPPLIED WITH IMPROVED THROUGH THICKNESS PROPERTIES Z25 ACCORDING TO EN10164.

REFERENCE DRAWINGS

1	93M-0407-SEN-6OL11-END-10118-B PAGE 01:17
2	
3	
4	
5	
6	
7	
8	
9	
10	
11	

6TH OF OCTOBER CITY RAIL TRANSIT MONORAIL &
NEW CAPITAL CITY RAIL TRANSIT MONORAIL

The Authority
Hill International
Authority Consultant

ORASCOM CONSTRUCTION
BOMBARDIER
Main Contractor

SENER
SHAKER CONSULTANCY GROUP
Designer

CONTRACTOR
CONSULTANT

ENGINEERING HOUSE FOR CONSULTANCY

6 October Monorail
Engineering Unit
Valid For Construction

SCALE	SHOP DRAWING	DATE
AS SHOWN		20.11.2024

DRAWING TITLE:
6TH OF OCTOBER MONORAIL
SHOP DRAWING FOR BRIDGE 6OL11-37
STEEL TRUSS (I).
GP4

REV	DATE	BY	DESCRIPTION	CHK	APD
A	20-11-24	M.SH	ISSUE FOR APPROVAL	A.SH	M.M

Project Code	Rubric	Initiator	Lot	Ref	Number	Revision
93M	0407	ACC	60L11	DWG	90073	A

Tekla structures

-Drawing shall be updated according to the comments on the GA drawing.
-Approval is subjected to the approval of coordination package between multi-discipline.

REVIEWED WITH COMMENT
MONORAILS PROJECT

All holes are 22mm U.N.O Length & Area & Weight per piece

Mark	Profile	Grade	QTY	Length	Area	Weight
GP5	PL35*1614.8	S355J2N	2	2810.2	7.22	940.5

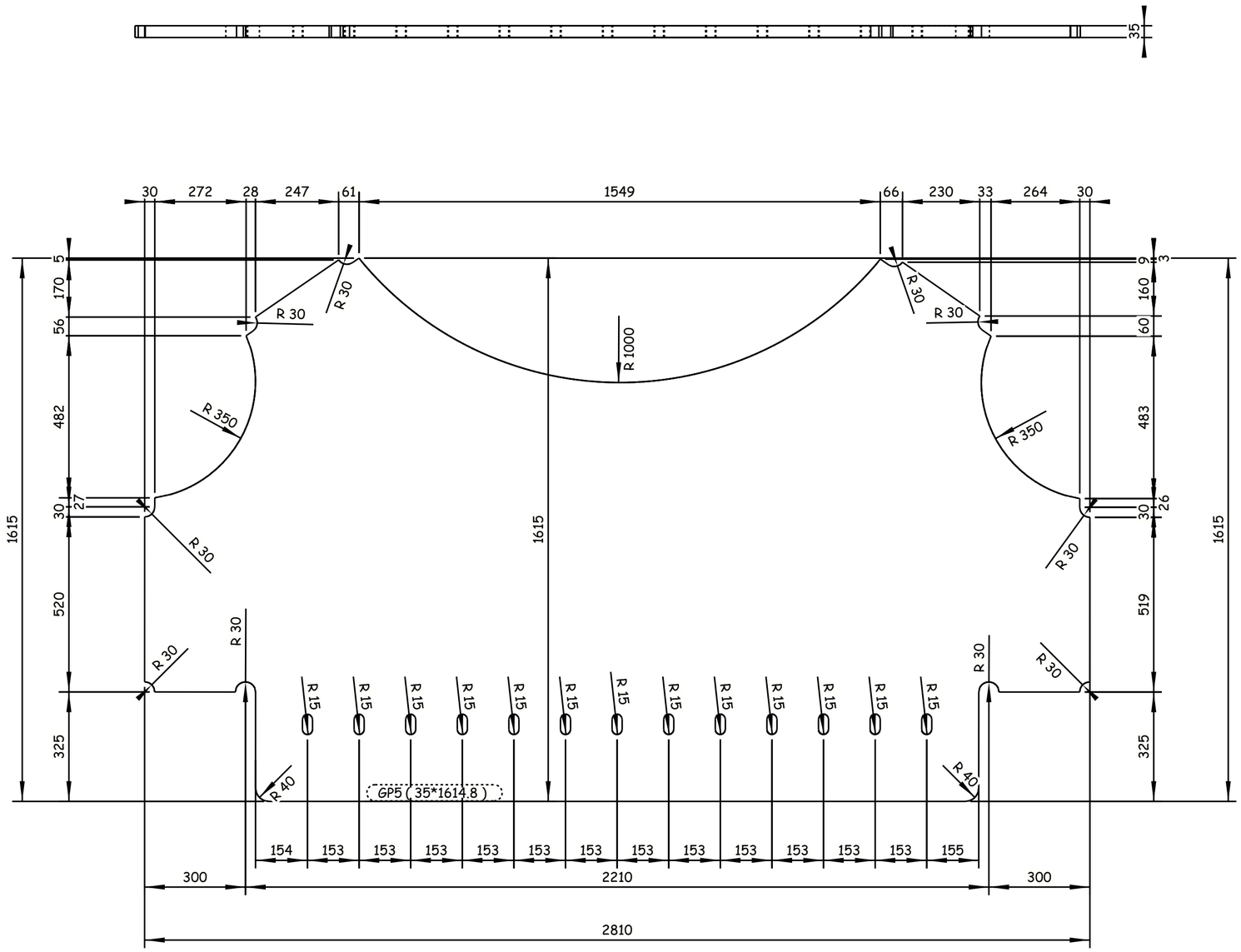

2 REQUIRED AS DRAWN E.SH GP5

GENERAL NOTES:

1. ALL DIMENSIONS ARE IN MILLIMETERS UNLESS OTHERWISE SPECIFIED.
2. LEVELS ARE IN METERS
3. DESIGN SERVICE LIFE OF 100 YEARS.
4. FLANGES OF TOP AND BOTTOM CHORDS TO BE SUPPLIED WITH IMPROVED THROUGH THICKNESS PROPERTIES Z25 ACCORDING TO EN10164.

REFERENCE DRAWINGS

1	93M-0407-SEN-6OL11-END-10118-B PAGE 01:17
2	
3	
4	
5	
6	
7	
8	
9	
10	
11	

6TH OF OCTOBER CITY RAIL TRANSIT MONORAIL &
NEW CAPITAL CITY RAIL TRANSIT MONORAIL

The Authority — Hill International Authority Consultant

Main Contractor

Designer

CONTRACTOR
CONSULTANT:

ENGINEERING HOUSE FOR CONSULTANCY

6 October Monorail
Engineering Unit
Valid For Construction

REV	DATE	BY	DESCRIPTION	CHK	APD
A	20-11-24	M.SH	ISSUE FOR APPROVAL	A.SH	M.M

SCALE: AS SHOWN | SHOP DRAWING | DATE: 20.11.2024

DRAWING TITLE:
6TH OF OCTOBER MONORAIL
SHOP DRAWING FOR BRIDGE 6OL11-37
STEEL TRUSS (I).
GP5

Project Code	Rubric	Initiator	Lot	Ref	Number	Revision
9 3 M	0 4 0 7	A C C	6 0 L 1 1	D W G	90074	A

Tekla structures

-Drawing shall be updated according to the comments on the GA drawing.
-Approval is subjected to the approval of coordination package between multi-discipline.

REVIEWED WITH COMMENT
MONORAILS PROJECT

All holes are 22mm U.N.O Length & Area & Weight per piece

Mark	Profile	Grade	QTY	Length	Area	Weight
GP6	PL35*1614.8	S355J2N	1	2810.2	7.22	940.7

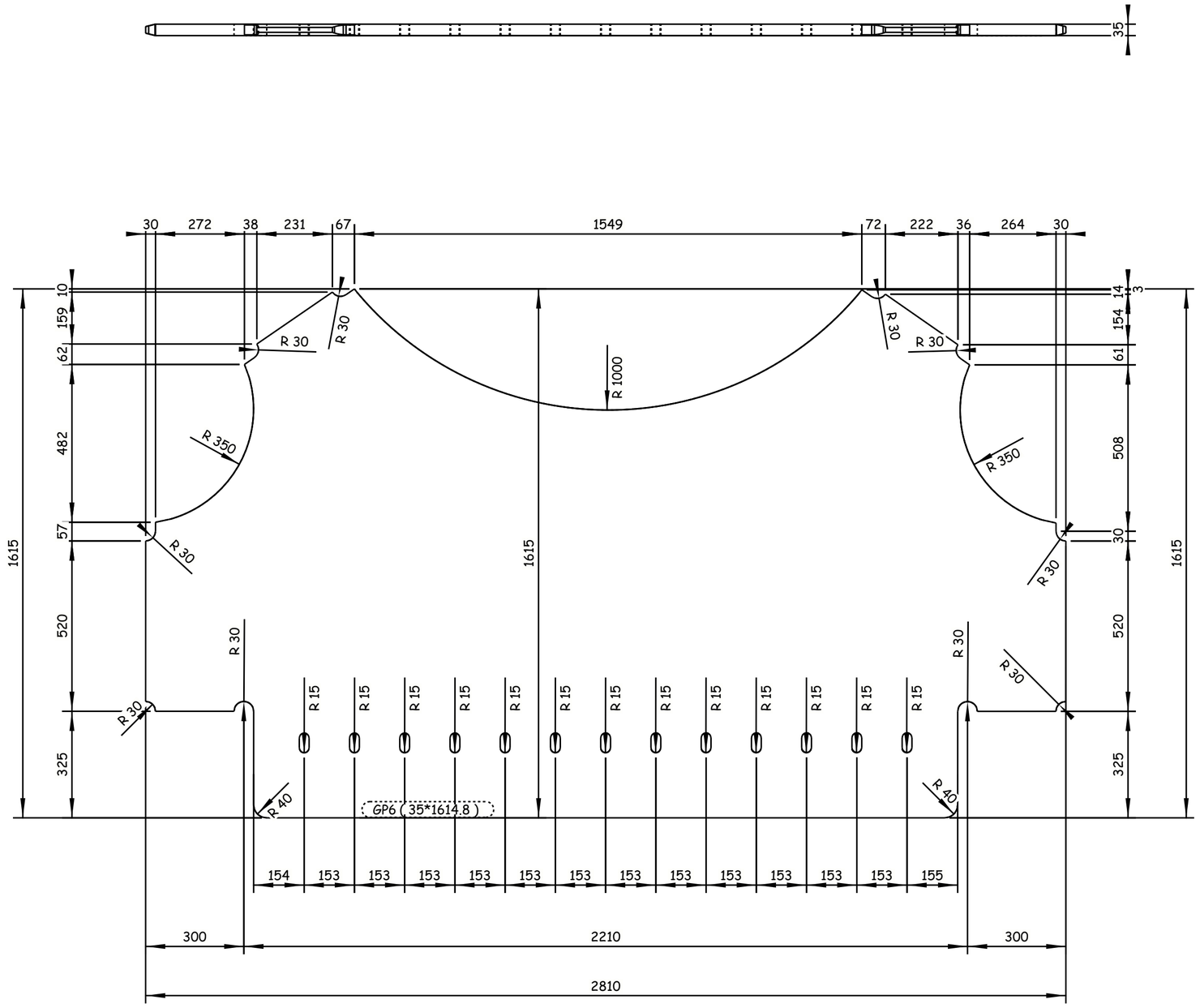

1 REQUIRED AS DRAWN E.SH GP6

GENERAL NOTES:

1. ALL DIMENSIONS ARE IN MILLIMETERS UNLESS OTHERWISE SPECIFIED.
2. LEVELS ARE IN METERS
3. DESIGN SERVICE LIFE OF 100 YEARS.
4. FLANGES OF TOP AND BOTTOM CHORDS TO BE SUPPLIED WITH IMPROVED THROUGH THICKNESS PROPERTIES Z25 ACCORDING TO EN10164.

REFERENCE DRAWINGS

1	93M-0407-SEN-6OL11-END-10118-B PAGE 01:17
2	
3	
4	
5	
6	
7	
8	
9	
10	
11	

6TH OF OCTOBER CITY RAIL TRANSIT MONORAIL &
NEW CAPITAL CITY RAIL TRANSIT MONORAIL

The Authority — Hill International Authority Consultant

Main Contractor: ORASCOM CONSTRUCTION, BOMBARDIER

Designer: SENER, SHAKER CONSULTING GROUP

CONTRACTOR
CONSULTANT:
ENGINEERING HOUSE FOR CONSULTANCY

REV	DATE	BY	DESCRIPTION	CHK	APD
A	20-11-24	M.SH	ISSUE FOR APPROVAL	A.SH	M.M

SCALE: AS SHOWN | SHOP DRAWING | DATE: 20.11.2024

6 October Monorail
Engineering Unit
Valid For Construction

DRAWING TITLE:
6TH OF OCTOBER MONORAIL
SHOP DRAWING FOR BRIDGE 6OL11-37
STEEL TRUSS (I).
GP6

Project Code	Rubric	Initiator	Lot	Ref	Number	Revision
93M	0407	ACC	60L111	DWG	90075	A

Tekla structures

-Drawing shall be updated according to the comments on the GA drawing.
-Approval is subjected to the approval of coordination package between multi-discipline.

REVIEWED WITH COMMENT
MONORAILS PROJECT

All holes are 22mm U.N.O Length & Area & Weight per piece

Mark	Profile	Grade	QTY	Length	Area	Weight
GP7	PL35*1614.8	S355J2N	1	2810.2	7.22	940.7

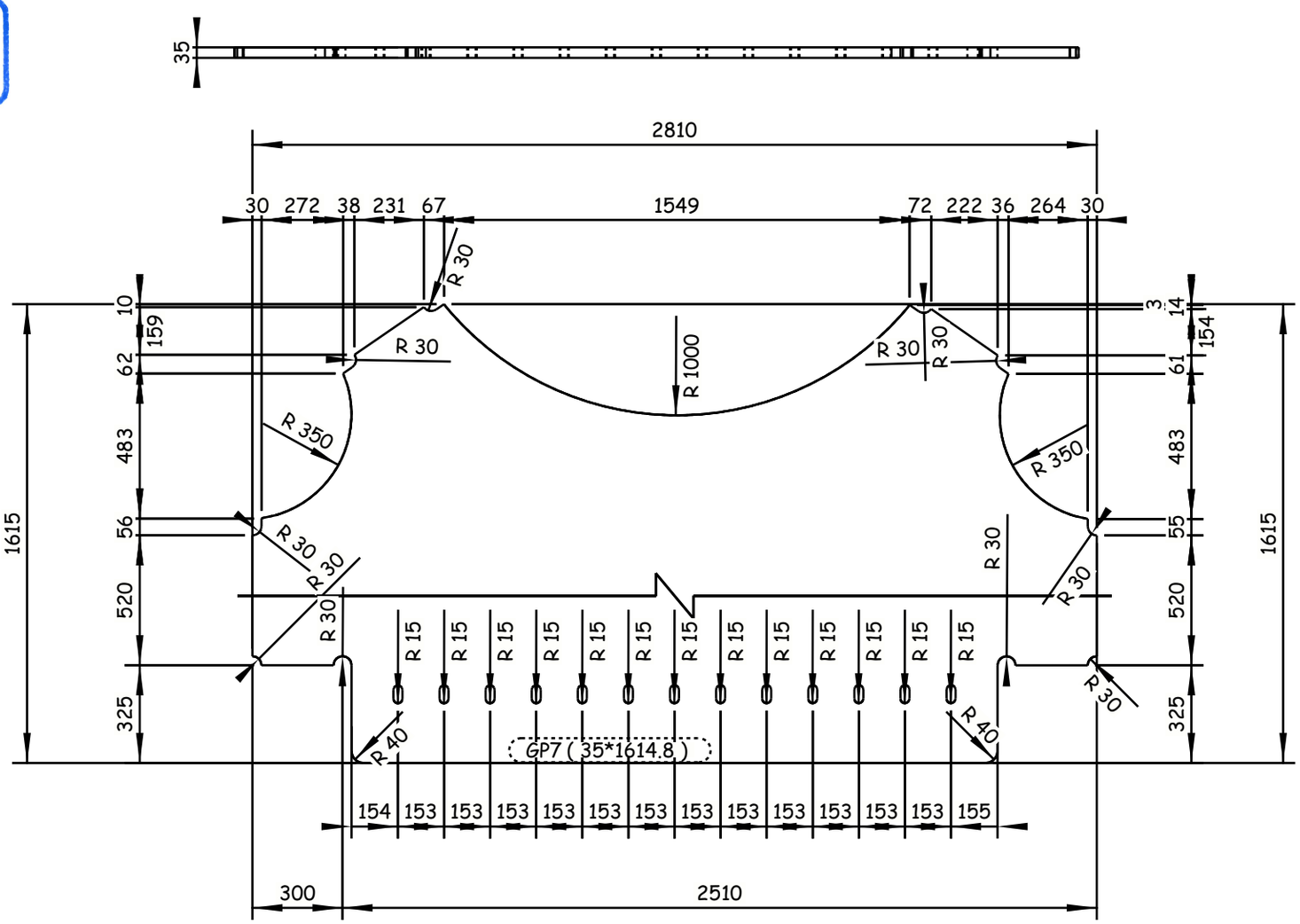

1 REQUIRED AS DRAWN E.SH GP7

GENERAL NOTES:

1. ALL DIMENSIONS ARE IN MILLIMETERS UNLESS OTHERWISE SPECIFIED.
2. LEVELS ARE IN METERS
3. DESIGN SERVICE LIFE OF 100 YEARS.
4. FLANGES OF TOP AND BOTTOM CHORDS TO BE SUPPLIED WITH IMPROVED THROUGH THICKNESS PROPERTIES Z25 ACCORDING TO EN10164.

REFERENCE DRAWINGS

1	93M-0407-SEN-6OL11-END-10118-B PAGE 01:17
2	
3	
4	
5	
6	
7	
8	
9	
10	
11	

6TH OF OCTOBER CITY RAIL TRANSIT MONORAIL &
NEW CAPITAL CITY RAIL TRANSIT MONORAIL

The Authority
Hill International
Authority Consultant
ORASCOM CONSTRUCTION
BOMBARDIER
Main Contractor
SENER
SHAKER CONSULTANCY GROUP
Designer

CONTRACTOR:
CONSULTANT:
ENGINEERING HOUSE FOR CONSULTANCY

6 October Monorail
Engineering Unit
Valid For Construction

SCALE	CHD DRAWING	DATE
AS SHOWN		20.11.2024

REV	DATE	BY	DESCRIPTION	CHK	APD
A	20-11-24	M.SH	ISSUE FOR APPROVAL	A.SH	M.M

DRAWING TITLE:
6TH OF OCTOBER MONORAIL
SHOP DRAWING FOR BRIDGE 6OL11-37
STEEL TRUSS (I).
GP7

Project Code	Rubric	Initiator	Lot	Ref	Number	Revision
93M	0407	ACC	60L11	DWG	90076	A

Tekla structures

-Drawing shall be updated according to the comments on the GA drawing.
-Approval is subjected to the approval of coordination package between multi-discipline.

REVIEWED WITH COMMENT
MONORAILS PROJECT

All holes are 22mm U.N.O Length & Area & Weight per piece

Mark	Profile	Grade	QTY	Length	Area	Weight
GP8	PL35*1614.8	S355J2N	1	2810.2	7.22	940.7

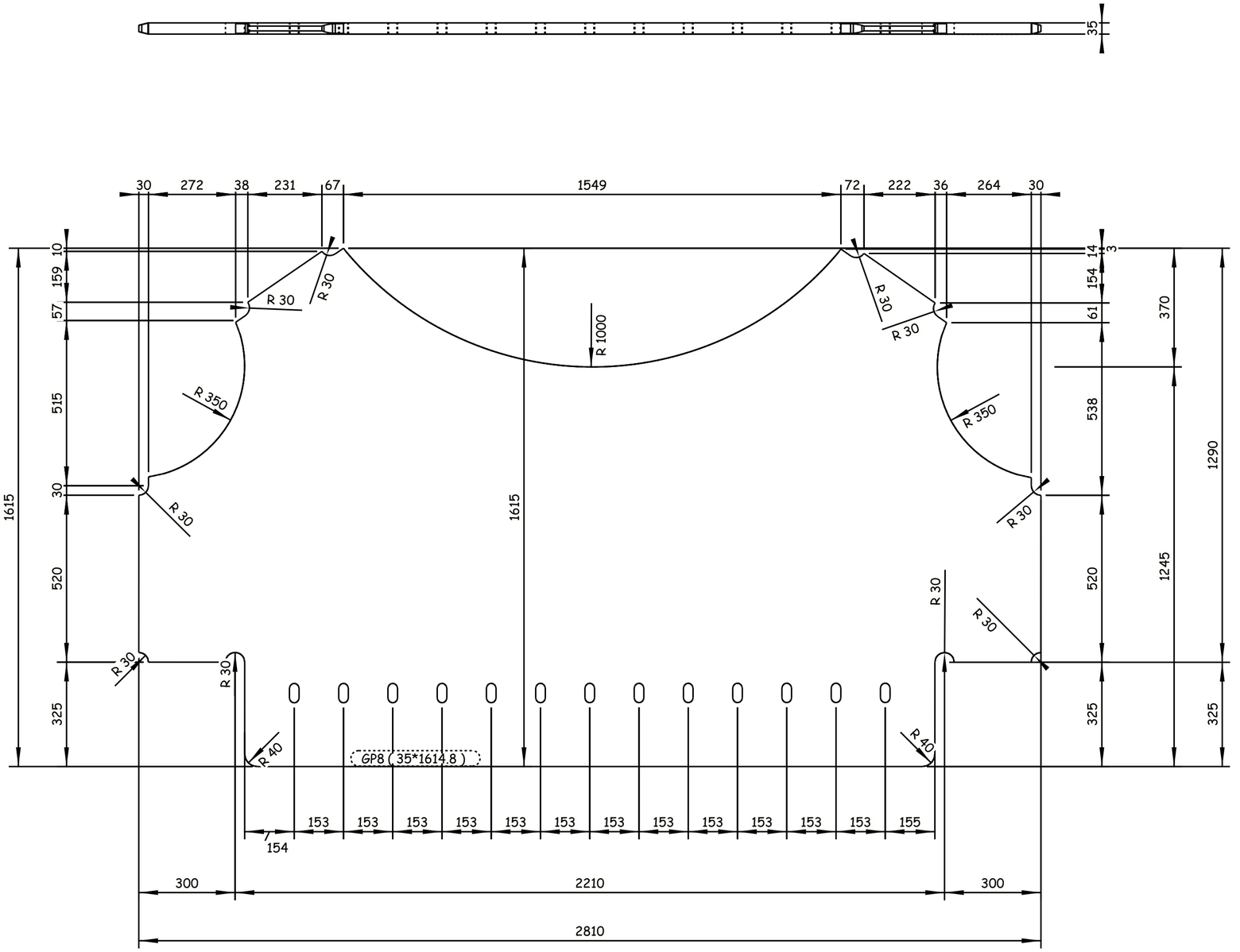

1 REQUIRED AS DRAWN E.SH GP8

GENERAL NOTES:

1. ALL DIMENSIONS ARE IN MILLIMETERS UNLESS OTHERWISE SPECIFIED.
2. LEVELS ARE IN METERS
3. DESIGN SERVICE LIFE OF 100 YEARS.
4. FLANGES OF TOP AND BOTTOM CHORDS TO BE SUPPLIED WITH IMPROVED THROUGH THICKNESS PROPERTIES Z25 ACCORDING TO EN10164.

REFERENCE DRAWINGS

1	93M-0407-SEN-6OL11-END-10118-B PAGE 01:17
2	
3	
4	
5	
6	
7	
8	
9	
10	
11	

6TH OF OCTOBER CITY RAIL TRANSIT MONORAIL &
NEW CAPITAL CITY RAIL TRANSIT MONORAIL

The Authority
Hill International
Authority Consultant

Main Contractor

Designer

CONTRACTOR
CONSULTANT

ENGINEERING HOUSE FOR CONSULTANCY

6 October Monorail
Engineering Unit
Valid For Construction

REV	DATE	BY	DESCRIPTION	CHK	APD
A	20-11-24	M.SH	ISSUE FOR APPROVAL	A.SH	M.M

SCALE: AS SHOWN
SHOP DRAWING
DATE: 20.11.2024

DRAWING TITLE:
6TH OF OCTOBER MONORAIL
SHOP DRAWING FOR BRIDGE 6OL11-37
STEEL TRUSS (I).
GP8

Project Code	Rubric	Initiator	Lot	Ref	Number	Revision
93M	0407	ACC	60L111	DWG	90077	A

Tekla structures

-Drawing shall be updated according to the comments on the GA drawing.
-Approval is subjected to the approval of coordination package between multi-discipline.

REVIEWED WITH COMMENT
MONORAILS PROJECT

All holes are 22mm U.N.O Length & Area & Weight per piece						
GP9	PL35*2485.4	S355J2N	2	2770.9	11.48	1518.3
Mark	Profile	Grade	QTY	Length	Area	Weight

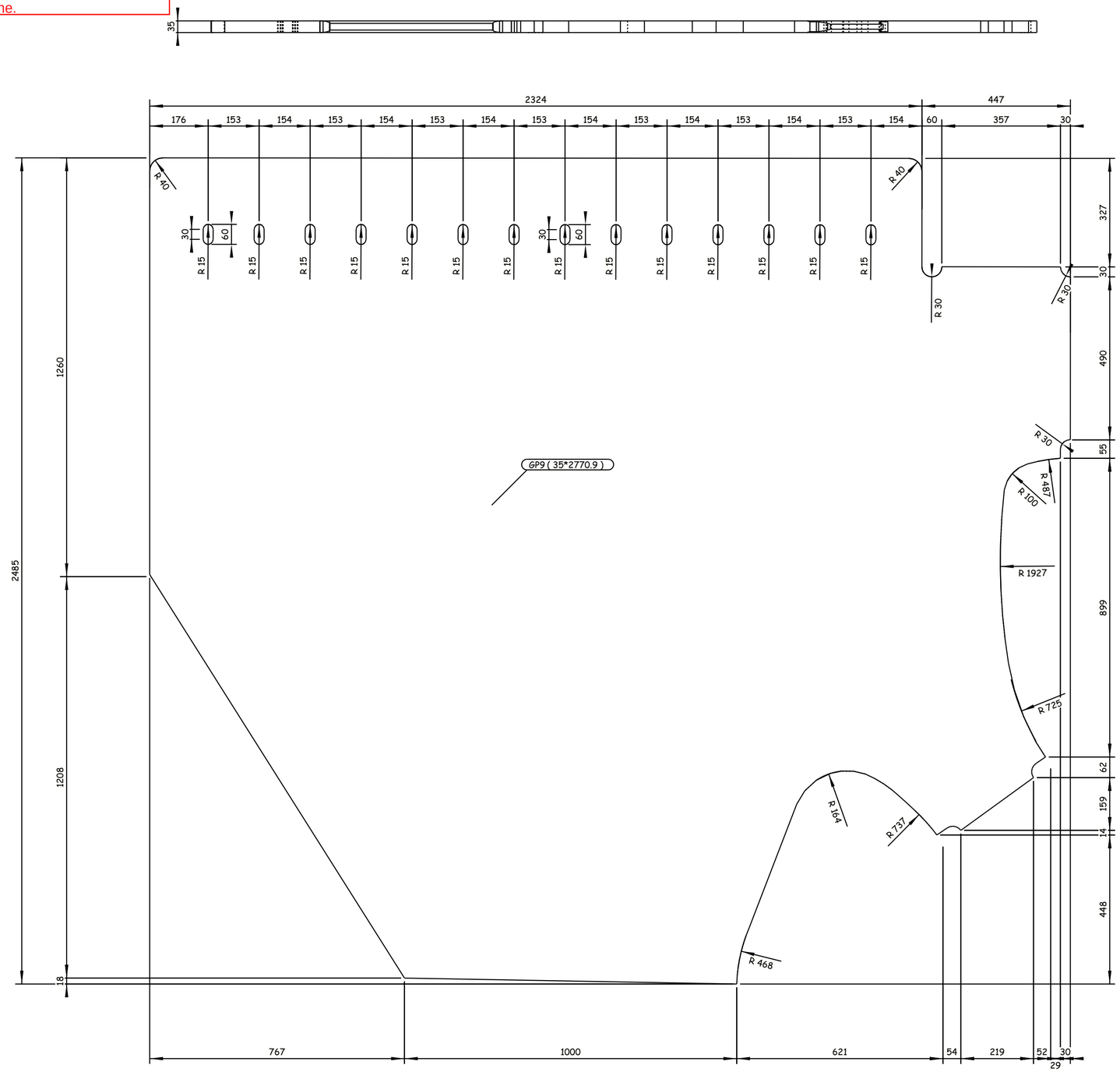

2 REQUIRED AS DRAWN E.SH GP9

GENERAL NOTES:

1. ALL DIMENSIONS ARE IN MILLIMETERS UNLESS OTHERWISE SPECIFIED.
2. LEVELS ARE IN METERS
3. DESIGN SERVICE LIFE OF 100 YEARS.
4. FLANGES OF TOP AND BOTTOM CHORDS TO BE SUPPLIED WITH IMPROVED THROUGH THICKNESS PROPERTIES Z25 ACCORDING TO EN10164.

REFERENCE DRAWINGS

1	93M-0407-SEN-6OL11-END-10118-B PAGE 01:17
2	
3	
4	
5	
6	
7	
8	
9	
10	
11	

6TH OF OCTOBER CITY RAIL TRANSIT MONORAIL &
NEW CAPITAL CITY RAIL TRANSIT MONORAIL

The Authority — Authority Consultant
Main Contractor
Designer

CONTRACTOR
CONSULTANT:
ENGINEERING HOUSE FOR CONSULTANCY

6 October Monorail Engineering Unit
Valid For Construction

SCALE: AS SHOWN
SHOP DRAWING
DATE: 20.11.2024

REV	DATE	BY	DESCRIPTION	CHK	APD
A	20-11-24	M.SH	ISSUE FOR APPROVAL	A.SH	M.M

DRAWING TITLE:
6TH OF OCTOBER MONORAIL
SHOP DRAWING FOR BRIDGE 6OL11-37
STEEL TRUSS (I).
GP9

Project Code	Rubric	Initiator	Lot	Ref	Number	Revision
9 3	M 0 4 0 7	A C C	6 0 L 1 1	D W G	90078	A

Tekla structures

-Drawing shall be updated according to the comments on the GA drawing.
-Approval is subjected to the approval of coordination package between multi-discipline.

REVIEWED WITH COMMENT
MONORAILS PROJECT

All holes are 22mm U.N.O Length & Area & Weight per piece						
GP10	PL35*2476.1	S355J2N	2	2770.9	11.48	1519.0
Mark	Profile	Grade	QTY	Length	Area	Weight

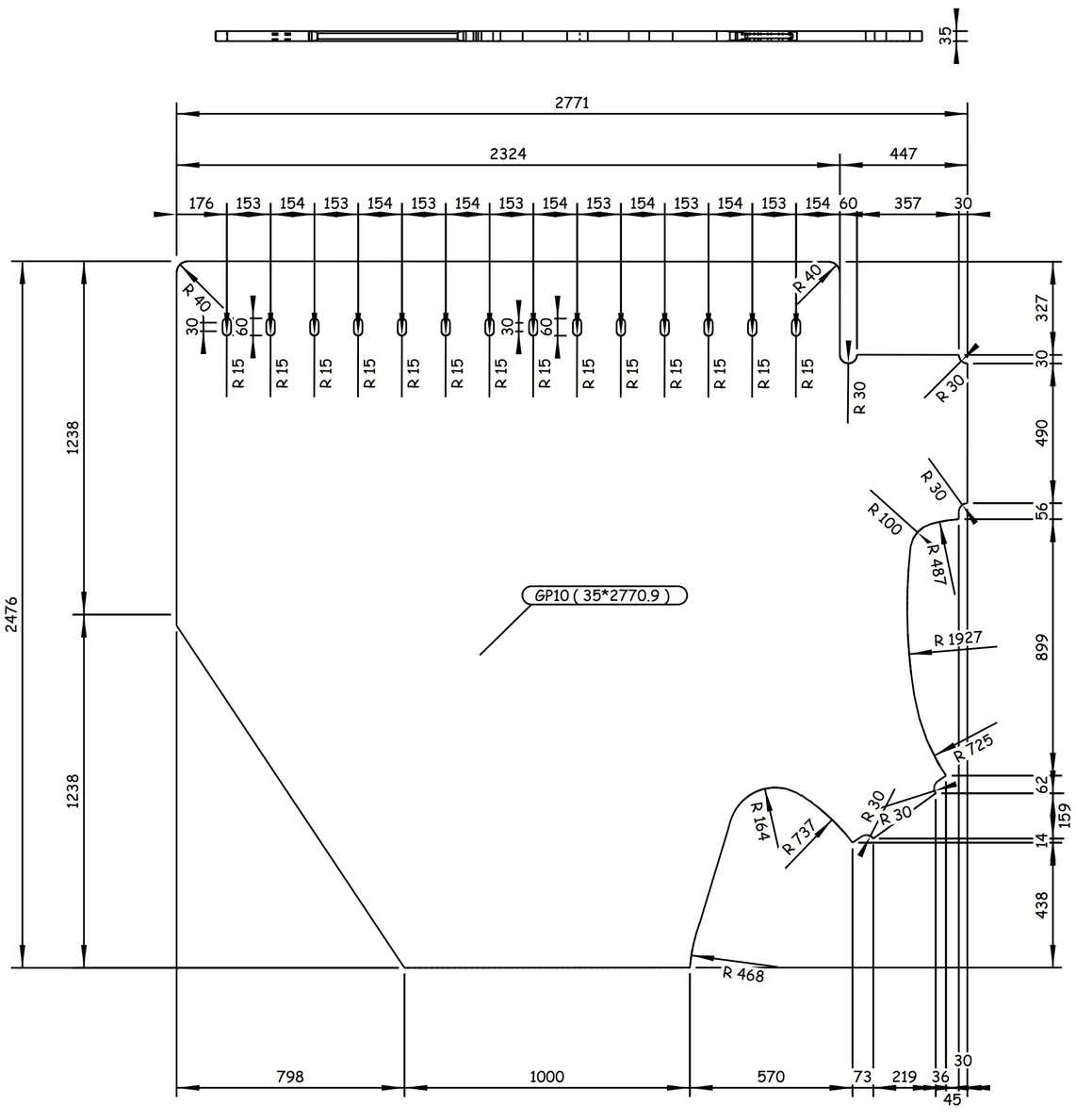

2 REQUIRED AS DRAWN E.SH GP10

GENERAL NOTES:

1. ALL DIMENSIONS ARE IN MILLIMETERS UNLESS OTHERWISE SPECIFIED.
2. LEVELS ARE IN METERS
3. DESIGN SERVICE LIFE OF 100 YEARS.
4. FLANGES OF TOP AND BOTTOM CHORDS TO BE SUPPLIED WITH IMPROVED THROUGH THICKNESS PROPERTIES Z25 ACCORDING TO EN10164.

REFERENCE DRAWINGS

1	93M-0407-SEN-6OL11-END-10118-B PAGE 01:17
2	
3	
4	
5	
6	
7	
8	
9	
10	
11	

6TH OF OCTOBER CITY RAIL TRANSIT MONORAIL &
NEW CAPITAL CITY RAIL TRANSIT MONORAIL

The Authority — Hill International Authority Consultant — ORASCOM CONSTRUCTION — BOMBARDIER — Main Contractor — SENER — SHAKER CONSULTANCY GROUP — Designer

CONTRACTOR
CONSULTANT:
ENGINEERING HOUSE FOR CONSULTANCY

6 October Monorail
Engineering Unit
Valid For Construction

SCALE	SHOP DRAWING	DATE
AS SHOWN		20.11.2024

REV	DATE	BY	DESCRIPTION	CHK	APD
A	20-11-24	M.SH	ISSUE FOR APPROVAL	A.SH	M.M

DRAWING TITLE:
6TH OF OCTOBER MONORAIL
SHOP DRAWING FOR BRIDGE 6OL11-37
STEEL TRUSS (I).
GP10

Project Code	Rubric	Initiator	Lot	Ref	Number	Revision
9 3 M	0 4 0 7	A C C	6 0 L 1 1	D W G	90079	A

Tekla structures

-Drawing shall be updated according to the comments on the GA drawing.
-Approval is subjected to the approval of coordination package between multi-discipline.

REVIEWED WITH COMMENT
MONORAILS PROJECT

All holes are 22mm U.N.O Length & Area & Weight per piece

Mark	Profile	Grade	QTY	Length	Area	Weight
IS1	FLT20*180	S355J2N	48	538.0	0.22	14.8

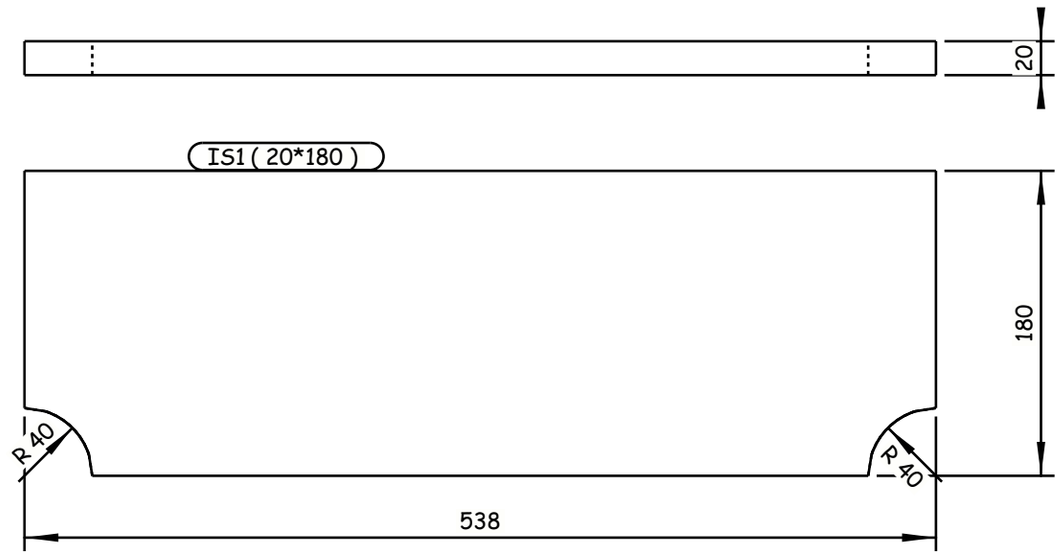

48 REQUIRED AS DRAWN E.SH IS1

GENERAL NOTES:

1. ALL DIMENSIONS ARE IN MILLIMETERS UNLESS OTHERWISE SPECIFIED.
2. LEVELS ARE IN METERS
3. DESIGN SERVICE LIFE OF 100 YEARS.
4. FLANGES OF TOP AND BOTTOM CHORDS TO BE SUPPLIED WITH IMPROVED THROUGH THICKNESS PROPERTIES Z25 ACCORDING TO EN10164.

REFERENCE DRAWINGS

1	93M-0407-SEN-6OL11-END-10118-B PAGE 01:17
2	
3	
4	
5	
6	
7	
8	
9	
10	
11	

6TH OF OCTOBER CITY RAIL TRANSIT MONORAIL &
NEW CAPITAL CITY RAIL TRANSIT MONORAIL

The Authority
Hill International
Authority Consultant

Main Contractor

Designer

CONTRACTOR / CONSULTANT :

ENGINEERING HOUSE FOR CONSULTANCY

6 October Monorail
Engineering Unit
Valid For Construction

SCALE AS SHOWN | SHD DRAWING | DATE 20.11.2024

DRAWING TITLE:
6TH OF OCTOBER MONORAIL
SHOP DRAWING FOR BRIDGE 6OL11-37
STEEL TRUSS (I).
IS1

REV	DATE	BY	DESCRIPTION	CHK	APD
A	20-11-24	M.SH	ISSUE FOR APPROVAL	A.SH	M.M

Project Code	Rubric	Initiator	Lot	Ref	Number	Revision
93M	0407	ACC	60L11	DWG	90080	A

Tekla structures

-Drawing shall be updated according to the comments on the GA drawing.
-Approval is subjected to the approval of coordination package between multi-discipline.

REVIEWED WITH COMMENT
MONORAILS PROJECT

All holes are 22mm U.N.O Length & Area & Weight per piece

Mark	Profile	Grade	QTY	Length	Area	Weight
IS2	FLT20*180	S355J2N	16	518.0	0.21	14.3

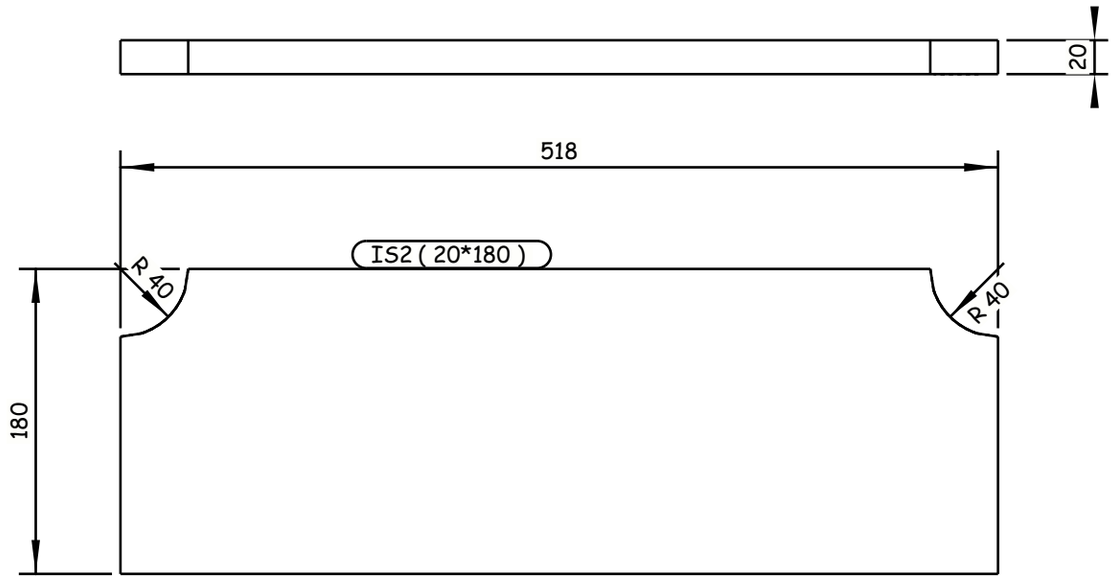

16 REQUIRED AS DRAWN E.SH IS2

Tekla structures

GENERAL NOTES:

1. ALL DIMENSIONS ARE IN MILLIMETERS UNLESS OTHERWISE SPECIFIED.
2. LEVELS ARE IN METERS
3. DESIGN SERVICE LIFE OF 100 YEARS.
4. FLANGES OF TOP AND BOTTOM CHORDS TO BE SUPPLIED WITH IMPROVED THROUGH THICKNESS PROPERTIES Z25 ACCORDING TO EN10164.

REFERENCE DRAWINGS

1	93M-0407-SEN-6OL11-END-10118-B PAGE 01:17
2	
3	
4	
5	
6	
7	
8	
9	
10	
11	

6TH OF OCTOBER CITY RAIL TRANSIT MONORAIL &
NEW CAPITAL CITY RAIL TRANSIT MONORAIL

The Authority
Hill International
Authority Consultant
ORASCOM CONSTRUCTION
BOMBARDIER
Main Contractor
SENER
SHAKER
Designer

CONTRACTOR CONSULTANT :
ENGINEERING HOUSE FOR CONSULTANCY

6 October Monorail
Engineering Unit
Valid For Construction

SCALE	CHD/DRWING	DATE
AS SHOWN		20.11.2024

REV	DATE	BY	DESCRIPTION	CHK	APD
A	20-11-24	M.SH	ISSUE FOR APPROVAL	A.SH	M.M

DRAWING TITLE:
6TH OF OCTOBER MONORAIL
SHOP DRAWING FOR BRIDGE 6OL11-37
STEEL TRUSS (I).
IS2

Project Code	Rubric	Initiator	Lot	Ref	Number	Revision
93M	0407	ACC	60L11	DWG	90081	A

-Drawing shall be updated according to the comments on the GA drawing.
-Approval is subjected to the approval of coordination package between multi-discipline.

REVIEWED WITH COMMENT
MONORAILS PROJECT

All holes are 22mm U.N.O Length & Area & Weight per piece

Mark	Profile	Grade	QTY	Length	Area	Weight
IS3	PL25*230	S355J2N	40	548.0	0.29	24.3

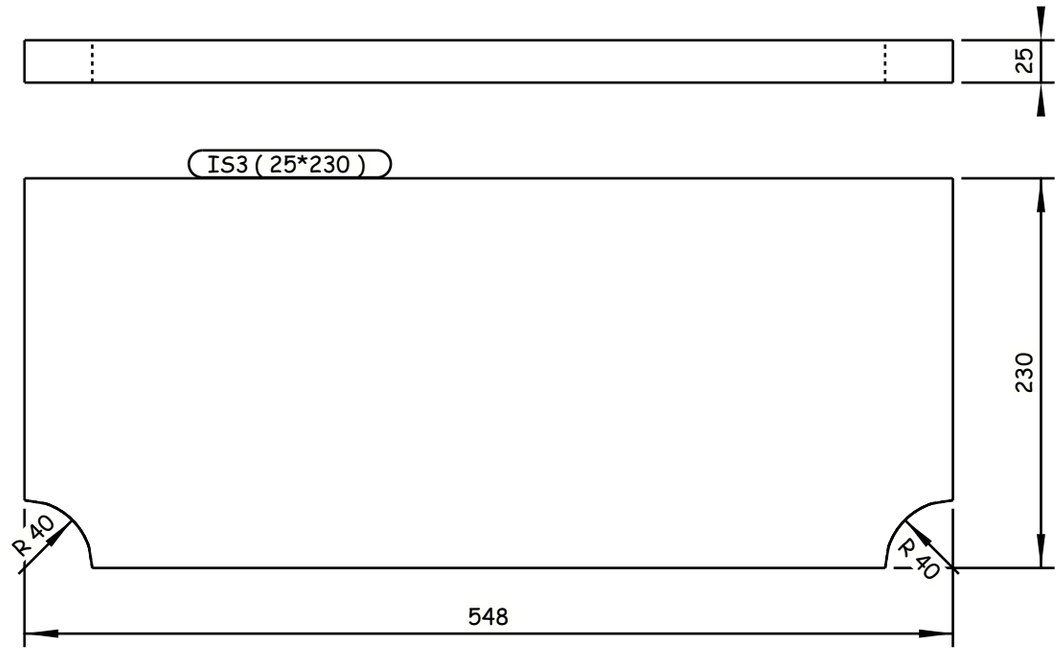

40 REQUIRED AS DRAWN E.SH IS3

Tekla structures

GENERAL NOTES:

1. ALL DIMENSIONS ARE IN MILLIMETERS UNLESS OTHERWISE SPECIFIED.
2. LEVELS ARE IN METERS
3. DESIGN SERVICE LIFE OF 100 YEARS.
4. FLANGES OF TOP AND BOTTOM CHORDS TO BE SUPPLIED WITH IMPROVED THROUGH THICKNESS PROPERTIES Z25 ACCORDING TO EN10164.

REFERENCE DRAWINGS

1	93M-0407-SEN-6OL11-END-10118-B PAGE 01:17
2	
3	
4	
5	
6	
7	
8	
9	
10	
11	

6TH OF OCTOBER CITY RAIL TRANSIT MONORAIL &
NEW CAPITAL CITY RAIL TRANSIT MONORAIL

The Authority
Hill International
Authority Consultant
ORASCOM CONSTRUCTION
Main Contractor
BOMBARDIER
SENER
SHAKER CONSULTANCY GROUP
Designer

CONTRACTOR / CONSULTANT:
ENGINEERING HOUSE FOR CONSULTANCY

6 October Monorail
Engineering Unit
Valid For Construction

SCALE	CHK'D DRAWING	DATE
AS SHOWN		20.11.2024

REV	DATE	BY	DESCRIPTION	CHK	APD
A	20-11-24	M.SH	ISSUE FOR APPROVAL	A.SH	M.M

DRAWING TITLE:
6TH OF OCTOBER MONORAIL
SHOP DRAWING FOR BRIDGE 6OL11-37
STEEL TRUSS (I).
IS3

Project Code	Rubric	Initiator	Lot	Ref	Number	Revision
93M	0407	ACC	60L11	DWG	90082	A

-Drawing shall be updated according to the comments on the GA drawing.
-Approval is subjected to the approval of coordination package between multi-discipline.

REVIEWED WITH COMMENT
MONORAILS PROJECT

All holes are 22mm U.N.O Length & Area & Weight per piece

Mark	Profile	Grade	QTY	Length	Area	Weight
IS4	PL25*282.5	S355J2N	12	548.0	0.35	29.9

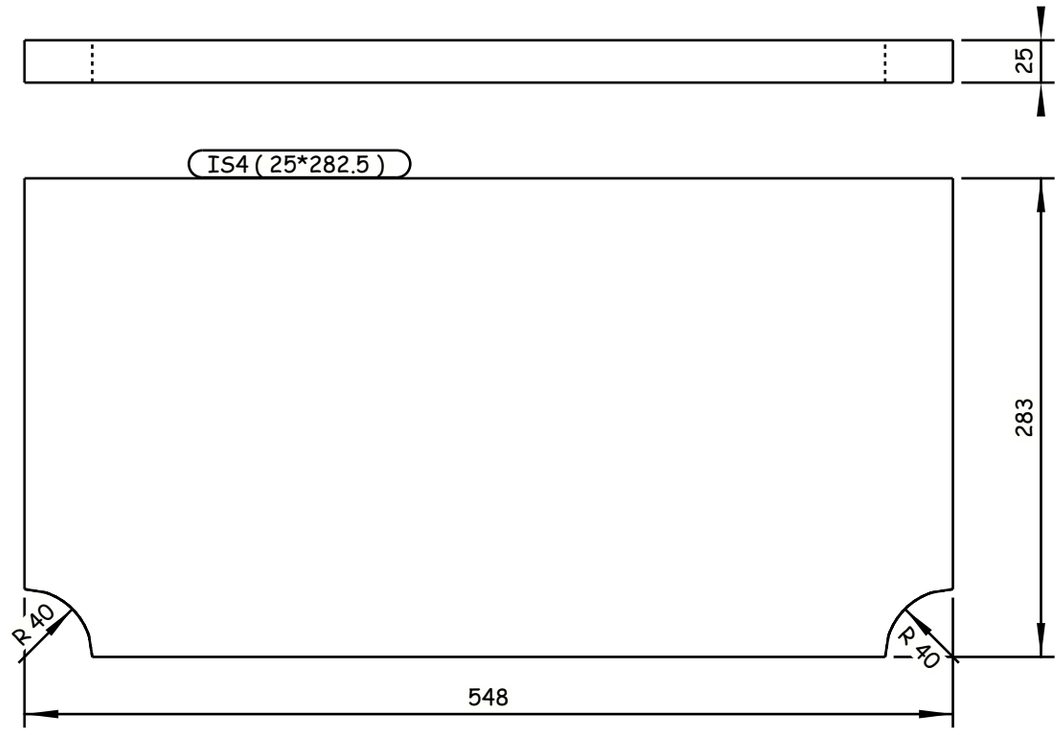

12 REQUIRED AS DRAWN E.SH IS4

Tekla structures

GENERAL NOTES:

1. ALL DIMENSIONS ARE IN MILLIMETERS UNLESS OTHERWISE SPECIFIED.
2. LEVELS ARE IN METERS
3. DESIGN SERVICE LIFE OF 100 YEARS.
4. FLANGES OF TOP AND BOTTOM CHORDS TO BE SUPPLIED WITH IMPROVED THROUGH THICKNESS PROPERTIES Z25 ACCORDING TO EN10164.

REFERENCE DRAWINGS

1	93M-0407-SEN-6OL11-END-10118-B PAGE 01:17
2	
3	
4	
5	
6	
7	
8	
9	
10	
11	

6TH OF OCTOBER CITY RAIL TRANSIT MONORAIL &
NEW CAPITAL CITY RAIL TRANSIT MONORAIL

The Authority
Hill International
Authority Consultant

Main Contractor

Designer

CONTRACTOR
CONSULTANT:

ENGINEERING HOUSE FOR CONSULTANCY

6 October Monorail
Engineering Unit
Valid For Construction

SCALE: AS SHOWN | CHK'D DRAWING | DATE: 20.11.2024

REV	DATE	BY	DESCRIPTION	CHK	APD
A	20-11-24	M.SH	ISSUE FOR APPROVAL	A.SH	M.M

DRAWING TITLE:
6TH OF OCTOBER MONORAIL
SHOP DRAWING FOR BRIDGE 6OL11-37
STEEL TRUSS (I).
IS4

Project Code	Rubric	Initiator	Lot	Ref	Number	Revision
9 3 M	0 4 0 7	A C C	6 0 L 1 1	D W G	90083	A

-Drawing shall be updated according to the comments on the GA drawing.
-Approval is subjected to the approval of coordination package between multi-discipline.

REVIEWED WITH COMMENT
MONORAILS PROJECT

All holes are 22mm U.N.O Length & Area & Weight per piece

Mark	Profile	Grade	QTY	Length	Area	Weight
IS5	PL25*230	S355J2N	24	538.0	0.28	23.8

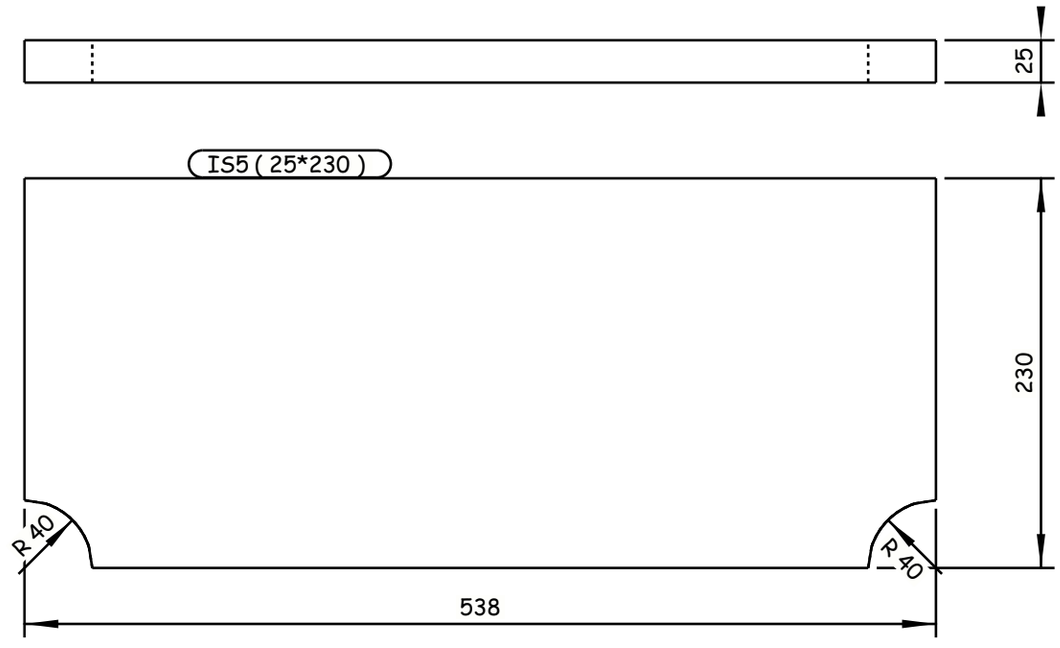

24 REQUIRED AS DRAWN E.SH IS5

Tekla structures

GENERAL NOTES:

1. ALL DIMENSIONS ARE IN MILLIMETERS UNLESS OTHERWISE SPECIFIED.
2. LEVELS ARE IN METERS
3. DESIGN SERVICE LIFE OF 100 YEARS.
4. FLANGES OF TOP AND BOTTOM CHORDS TO BE SUPPLIED WITH IMPROVED THROUGH THICKNESS PROPERTIES Z25 ACCORDING TO EN10164.

REFERENCE DRAWINGS

1	93M-0407-SEN-6OL11-END-10118-B PAGE 01:17
2	
3	
4	
5	
6	
7	
8	
9	
10	
11	

6TH OF OCTOBER CITY RAIL TRANSIT MONORAIL &
NEW CAPITAL CITY RAIL TRANSIT MONORAIL

The Authority
Hill International
Authority Consultant
ORASCOM CONSTRUCTION
Main Contractor
BOMBARDIER
SENER
SHAKER CONSULTANCY GROUP
Designer

CONTRACTOR
CONSULTANT:
ENGINEERING HOUSE FOR CONSULTANCY

6 October Monorail
Engineering Unit
Valid For Construction

SCALE: AS SHOWN | CHK'D DRAWING | DATE: 20.11.2024

REV	DATE	BY	DESCRIPTION	CHK	APD
A	20-11-24	M.SH	ISSUE FOR APPROVAL	A.SH	M.M

DRAWING TITLE:
6TH OF OCTOBER MONORAIL
SHOP DRAWING FOR BRIDGE 6OL11-37
STEEL TRUSS (I).
IS5

Project Code	Rubric	Initiator	Lot	Ref	Number	Revision
9 3 M	0 4 0 7	A C C	6 0 L 1 1	D W G	90084	A

-Drawing shall be updated according to the comments on the GA drawing.
-Approval is subjected to the approval of coordination package between multi-discipline.

REVIEWED WITH COMMENT
MONORAILS PROJECT

All holes are 22mm U.N.O Length & Area & Weight per piece

Mark	Profile	Grade	QTY	Length	Area	Weight
IS6	PL25*282.5	S355J2N	6	538.0	0.34	29.3

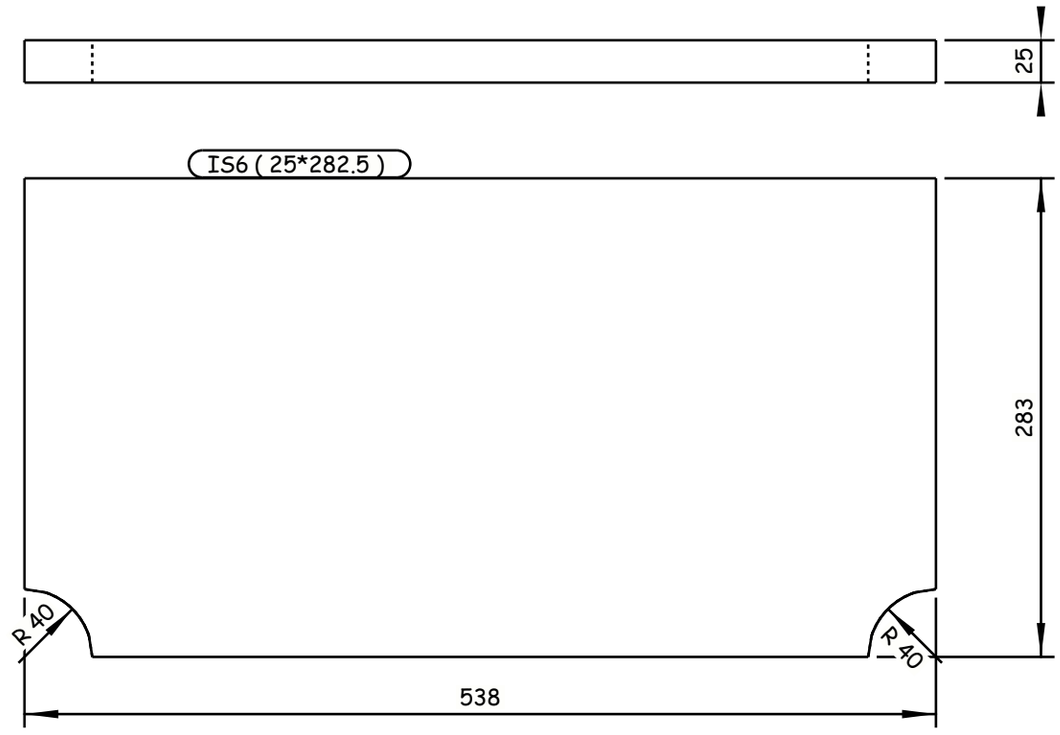

6 REQUIRED AS DRAWN E.SH IS6

6 October Monorail
Engineering Unit
Valid For Construction

Tekla structures

GENERAL NOTES:

1. ALL DIMENSIONS ARE IN MILLIMETERS UNLESS OTHERWISE SPECIFIED.
2. LEVELS ARE IN METERS
3. DESIGN SERVICE LIFE OF 100 YEARS.
4. FLANGES OF TOP AND BOTTOM CHORDS TO BE SUPPLIED WITH IMPROVED THROUGH THICKNESS PROPERTIES Z25 ACCORDING TO EN10164.

REFERENCE DRAWINGS

1	93M-0407-SEN-6OL11-END-10118-B PAGE 01:17
2	
3	
4	
5	
6	
7	
8	
9	
10	
11	

6TH OF OCTOBER CITY RAIL TRANSIT MONORAIL &
NEW CAPITAL CITY RAIL TRANSIT MONORAIL

The Authority
Hill International
Authority Consultant

Main Contractor

Designer

CONTRACTOR CONSULTANT:
ENGINEERING HOUSE FOR CONSULTANCY

SCALE: AS SHOWN | CHK'D DRAWING | DATE: 20.11.2024

DRAWING TITLE:
6TH OF OCTOBER MONORAIL
SHOP DRAWING FOR BRIDGE 6OL11-37
STEEL TRUSS (I).
IS6

REV	DATE	BY	DESCRIPTION	CHK	APD
A	20-11-24	M.SH	ISSUE FOR APPROVAL	A.SH	M.M

Project Code	Rubric	Initiator	Lot	Ref	Number	Revision
93M	0407	ACC	60L11	DWG	90085	A

-Drawing shall be updated according to the comments on the GA drawing.
-Approval is subjected to the approval of coordination package between multi-discipline.

REVIEWED WITH COMMENT
MONORAILS PROJECT

All holes are 22mm U.N.O Length & Area & Weight per piece

Mark	Profile	Grade	QTY	Length	Area	Weight
IS7	FLT25*400	S355J2N	8	230.0	0.17	14.3

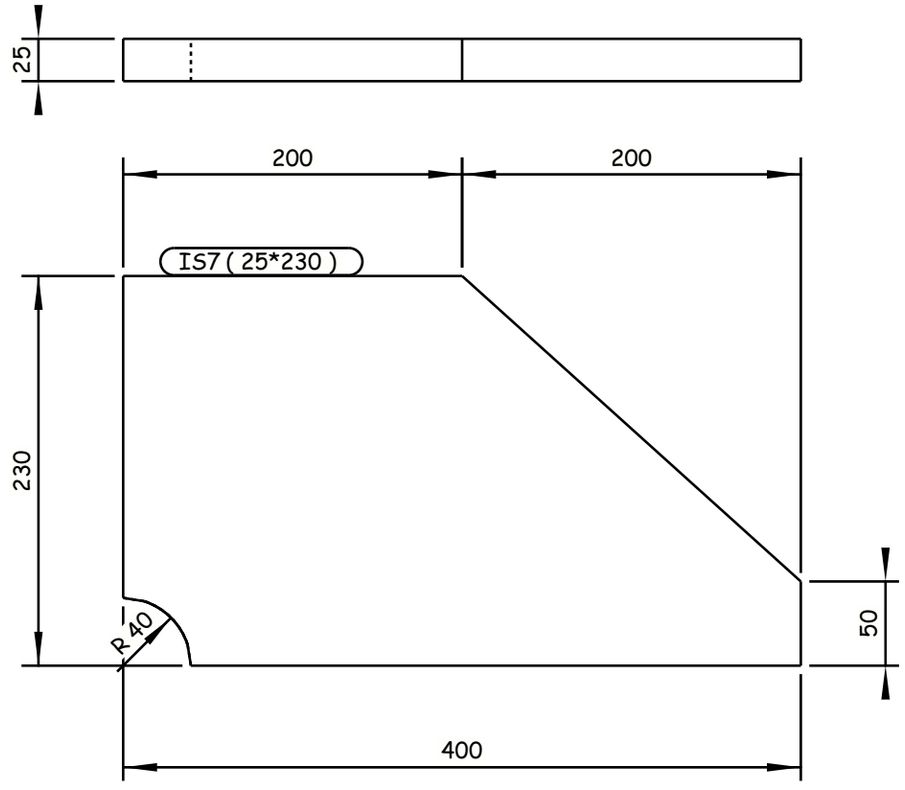

8 REQUIRED AS DRAWN E.SH IS7

GENERAL NOTES:

1. ALL DIMENSIONS ARE IN MILLIMETERS UNLESS OTHERWISE SPECIFIED.
2. LEVELS ARE IN METERS
3. DESIGN SERVICE LIFE OF 100 YEARS.
4. FLANGES OF TOP AND BOTTOM CHORDS TO BE SUPPLIED WITH IMPROVED THROUGH THICKNESS PROPERTIES Z25 ACCORDING TO EN10164.

REFERENCE DRAWINGS

1	93M-0407-SEN-6OL11-END-10118-B PAGE 01:17
2	
3	
4	
5	
6	
7	
8	
9	
10	
11	

6TH OF OCTOBER CITY RAIL TRANSIT MONORAIL &
NEW CAPITAL CITY RAIL TRANSIT MONORAIL

The Authority
Hill International
Authority Consultant

ORASCOM CONSTRUCTION
Main Contractor

BOMBARDIER
SENER
SHAKER CONSULTANCY GROUP
Designer

CONTRACTOR & CONSULTANT:
ENGINEERING HOUSE FOR CONSULTANCY

6 October Monorail
Engineering Unit
Valid For Construction

SCALE	CHK'D DRAWING	DATE
AS SHOWN		20.11.2024

REV	DATE	BY	DESCRIPTION	CHK	APD
A	20-11-24	M.SH	ISSUE FOR APPROVAL	A.SH	M.M

DRAWING TITLE:
6TH OF OCTOBER MONORAIL
SHOP DRAWING FOR BRIDGE 6OL11-37
STEEL TRUSS (I).
IS7

Project Code	Rubric	Initiator	Lot	Ref	Number	Revision
93M	0407	ACC	60L11	DWG	90086	A

Tekla structures

-Drawing shall be updated according to the comments on the GA drawing.
-Approval is subjected to the approval of coordination package between multi-discipline.

REVIEWED WITH COMMENT
MONORAILS PROJECT

All holes are 22mm U.N.O Length & Area & Weight per piece

Mark	Profile	Grade	QTY	Length	Area	Weight
IS8	PL30*230	S355J2N	8	548.0	0.29	29.1

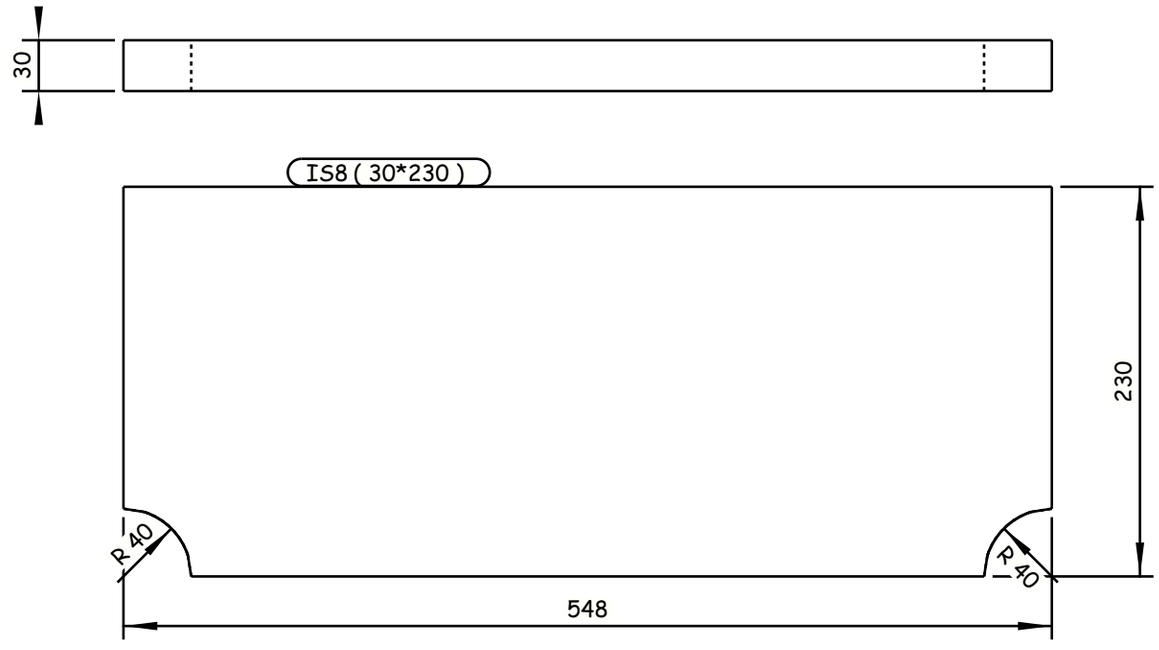

8 REQUIRED AS DRAWN E.SH IS8

Tekla structures

GENERAL NOTES:

1. ALL DIMENSIONS ARE IN MILLIMETERS UNLESS OTHERWISE SPECIFIED.
2. LEVELS ARE IN METERS
3. DESIGN SERVICE LIFE OF 100 YEARS.
4. FLANGES OF TOP AND BOTTOM CHORDS TO BE SUPPLIED WITH IMPROVED THROUGH THICKNESS PROPERTIES Z25 ACCORDING TO EN10164.

REFERENCE DRAWINGS

1	93M-0407-SEN-6OL11-END-10118-B PAGE 01:17
2	
3	
4	
5	
6	
7	
8	
9	
10	
11	

6TH OF OCTOBER CITY RAIL TRANSIT MONORAIL &
NEW CAPITAL CITY RAIL TRANSIT MONORAIL

The Authority
Hill International
Authority Consultant

Main Contractor

Designer

CONTRACTOR / CONSULTANT:

ENGINEERING HOUSE FOR CONSULTANCY

6 October Monorail
Engineering Unit
Valid For Construction

SCALE: AS SHOWN | CHK'D DRAWING | DATE: 20.11.2024

REV	DATE	BY	DESCRIPTION	CHK	APD
A	20-11-24	M.SH	ISSUE FOR APPROVAL	A.SH	M.M

DRAWING TITLE:
6TH OF OCTOBER MONORAIL
SHOP DRAWING FOR BRIDGE 6OL11-37
STEEL TRUSS (I).
IS8

Project Code	Rubric	Initiator	Lot	Ref	Number	Revision
9 3 M	0 4 0 7	A C C	6 0 L 1 1	D W G	90087	A

-Drawing shall be updated according to the comments on the GA drawing.
-Approval is subjected to the approval of coordination package between multi-discipline.

REVIEWED WITH COMMENT
MONORAILS PROJECT

All holes are 22mm U.N.O Length & Area & Weight per piece

Mark	Profile	Grade	QTY	Length	Area	Weight
IS9	FLT25*180	S355J2N	16	250.0	0.08	6.1

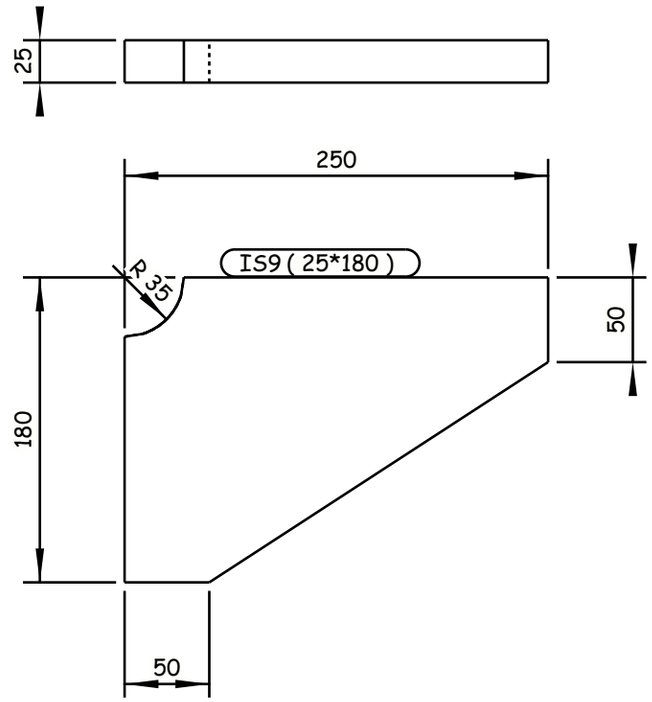

16 REQUIRED AS DRAWN E.SH IS9

Tekla structures

GENERAL NOTES:

1. ALL DIMENSIONS ARE IN MILLIMETERS UNLESS OTHERWISE SPECIFIED.
2. LEVELS ARE IN METERS
3. DESIGN SERVICE LIFE OF 100 YEARS.
4. FLANGES OF TOP AND BOTTOM CHORDS TO BE SUPPLIED WITH IMPROVED THROUGH THICKNESS PROPERTIES Z25 ACCORDING TO EN10164.

REFERENCE DRAWINGS

1	93M-0407-SEN-6OL11-END-10118-B PAGE 01:17
2	
3	
4	
5	
6	
7	
8	
9	
10	
11	

6TH OF OCTOBER CITY RAIL TRANSIT MONORAIL &
NEW CAPITAL CITY RAIL TRANSIT MONORAIL

The Authority
Hill International
Authority Consultant

Main Contractor

Designer

CONTRACTOR
CONSULTANT :

ENGINEERING HOUSE FOR CONSULTANCY

SCALE
AS SHOWN

SHOP DRAWING

DATE
20.11.2024

6 October Monorail
Engineering Unit
Valid For Construction

DRAWING TITLE:
6TH OF OCTOBER MONORAIL
SHOP DRAWING FOR BRIDGE 6OL11-37
STEEL TRUSS (I).
IS9

REV	DATE	BY	DESCRIPTION	CHK	APD
A	20-11-24	M.SH	ISSUE FOR APPROVAL	A.SH	M.M

Project Code	Rubric	Initiator	Lot	Ref	Number	Revision
93M	0407	ACC	6OL11	DWG	90088	A

-Drawing shall be updated according to the comments on the GA drawing.
-Approval is subjected to the approval of coordination package between multi-discipline.

REVIEWED WITH COMMENT
MONORAILS PROJECT

All holes are 22mm U.N.O Length & Area & Weight per piece

Mark	Profile	Grade	QTY	Length	Area	Weight
IS10	PL25*185	S355J2N	12	2146.0	0.90	77.4

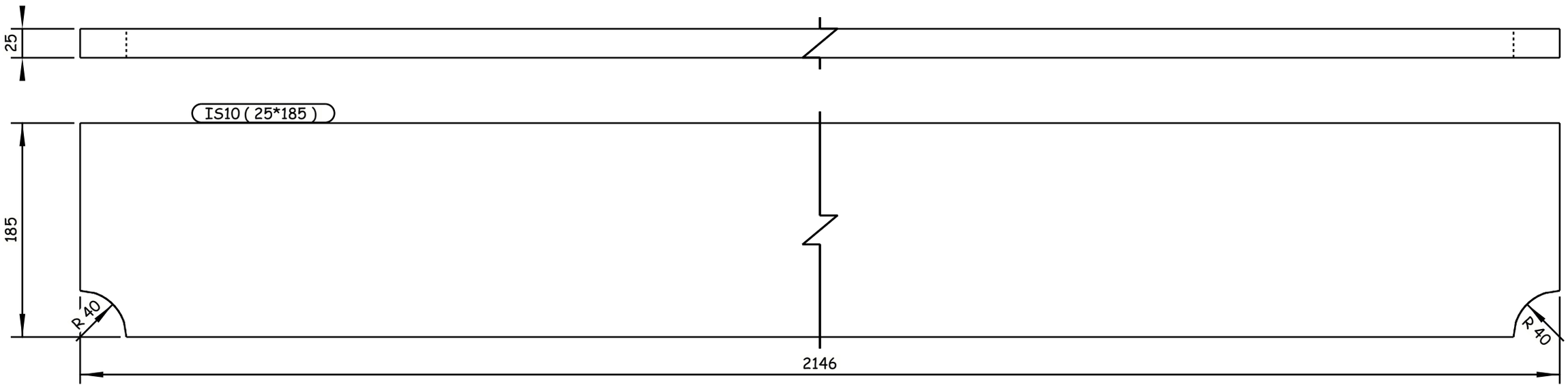

12 REQUIRED AS DRAWN E.SH IS10

Tekla structures

GENERAL NOTES:

1. ALL DIMENSIONS ARE IN MILLIMETERS UNLESS OTHERWISE SPECIFIED.
2. LEVELS ARE IN METERS
3. DESIGN SERVICE LIFE OF 100 YEARS.
4. FLANGES OF TOP AND BOTTOM CHORDS TO BE SUPPLIED WITH IMPROVED THROUGH THICKNESS PROPERTIES Z25 ACCORDING TO EN10164.

REFERENCE DRAWINGS

1	93M-0407-SEN-6OL11-END-10118-B PAGE 01:17
2	
3	
4	
5	
6	
7	
8	
9	
10	
11	

6TH OF OCTOBER CITY RAIL TRANSIT MONORAIL &
NEW CAPITAL CITY RAIL TRANSIT MONORAIL

The Authority
Hill International
Authority Consultant

ORASCOM CONSTRUCTION
BOMBARDIER
Main Contractor

SENER
SHAKER CONSULTING GROUP
Designer

CONTRACTOR & CONSULTANT :
ENGINEERING HOUSE FOR CONSULTANCY

SCALE: AS SHOWN | CHK'D DRWING | DATE: 20.11.2024

6 October Monorail
Engineering Unit
Valid For Construction

REV	DATE	BY	DESCRIPTION	CHK	APD
A	20-11-24	M.SH	ISSUE FOR APPROVAL	A.SH	M.M

DRAWING TITLE:
6TH OF OCTOBER MONORAIL
SHOP DRAWING FOR BRIDGE 6OL11-37
STEEL TRUSS (I).
IS10

Project Code	Rubric	Initiator	Lot	Ref	Number	Revision
93M	0407	ACC	60L11	DWG	90089	A

-Drawing shall be updated according to the comments on the GA drawing.
-Approval is subjected to the approval of coordination package between multi-discipline.

REVIEWED WITH COMMENT
MONORAILS PROJECT

All holes are 22mm U.N.O Length & Area & Weight per piece

Mark	Profile	Grade	QTY	Length	Area	Weight
IS11	FLT25*180	S355J2N	16	600.0	0.25	20.8

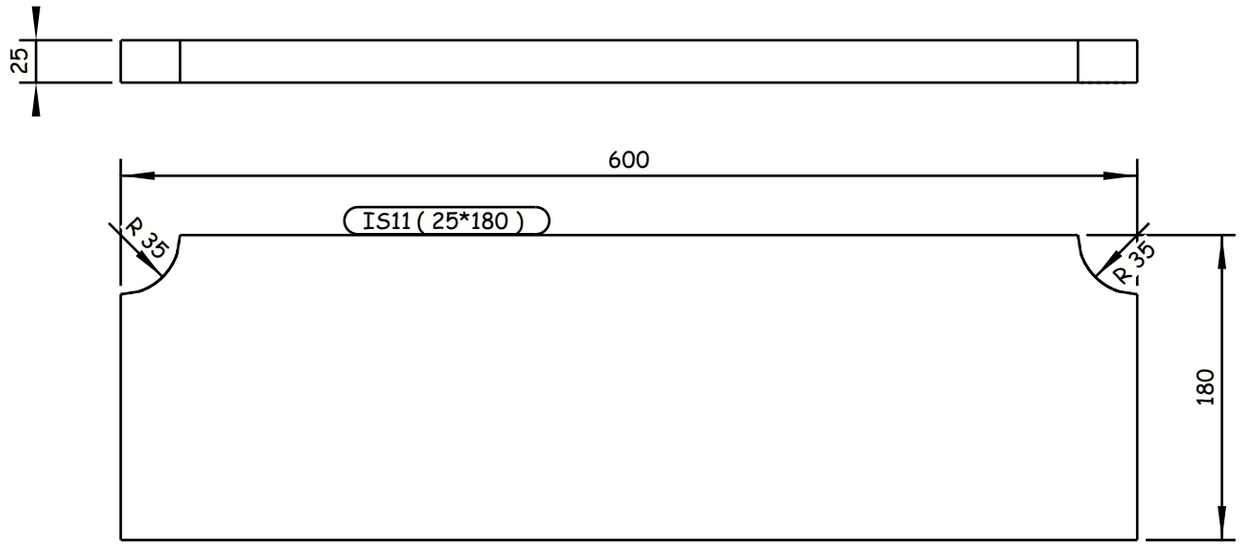

16 REQUIRED AS DRAWN E.SH IS11

Tekla structures

GENERAL NOTES:

1. ALL DIMENSIONS ARE IN MILLIMETERS UNLESS OTHERWISE SPECIFIED.
2. LEVELS ARE IN METERS
3. DESIGN SERVICE LIFE OF 100 YEARS.
4. FLANGES OF TOP AND BOTTOM CHORDS TO BE SUPPLIED WITH IMPROVED THROUGH THICKNESS PROPERTIES Z25 ACCORDING TO EN10164.

REFERENCE DRAWINGS

1	93M-0407-SEN-6OL11-END-10118-B PAGE 01:17
2	
3	
4	
5	
6	
7	
8	
9	
10	
11	

6TH OF OCTOBER CITY RAIL TRANSIT MONORAIL &
NEW CAPITAL CITY RAIL TRANSIT MONORAIL

The Authority
Hill International
Authority Consultant

Main Contractor

Designer

CONTRACTOR
CONSULTANT:

ENGINEERING HOUSE FOR CONSULTANCY

SCALE
AS SHOWN

SHOP DRAWING

DATE
20.11.2024

6 October Monorail
Engineering Unit
Valid For Construction

DRAWING TITLE:
6TH OF OCTOBER MONORAIL
SHOP DRAWING FOR BRIDGE 6OL11-37
STEEL TRUSS (I).
IS11

REV	DATE	BY	DESCRIPTION	CHK	APD
A	20-11-24	M.SH	ISSUE FOR APPROVAL	A.SH	M.M

Project Code	Rubric	Initiator	Lot	Ref	Number	Revision
93M	0407	ACC	60L11	DWG	90090	A

-Drawing shall be updated according to the comments on the GA drawing.
-Approval is subjected to the approval of coordination package between multi-discipline.

REVIEWED WITH COMMENT
MONORAILS PROJECT

All holes are 22mm U.N.O Length & Area & Weight per piece

Mark	Profile	Grade	QTY	Length	Area	Weight
L1	1/2IPE330	S355J0N	12	6556.9	3.80	138.5

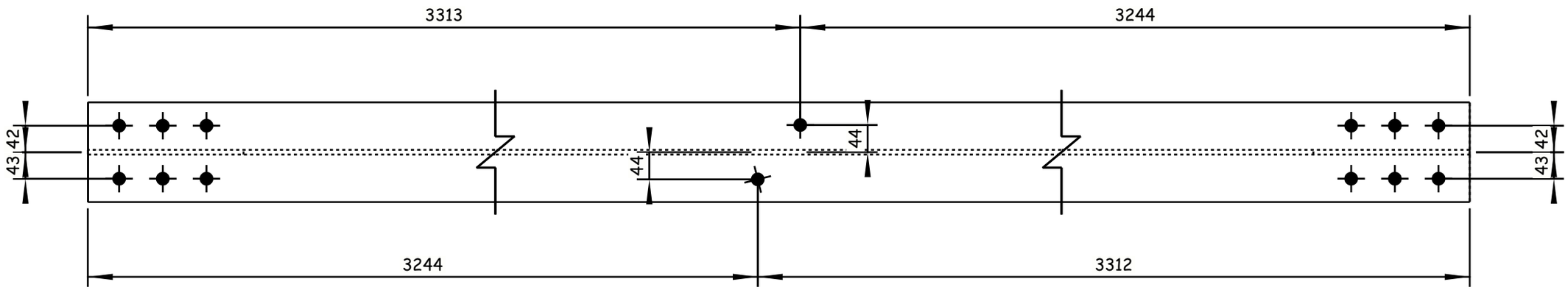

12 REQUIRED AS DRAWN E.SH L1

Tekla structures

GENERAL NOTES:

1. ALL DIMENSIONS ARE IN MILLIMETERS UNLESS OTHERWISE SPECIFIED.
2. LEVELS ARE IN METERS
3. DESIGN SERVICE LIFE OF 100 YEARS.
4. FLANGES OF TOP AND BOTTOM CHORDS TO BE SUPPLIED WITH IMPROVED THROUGH THICKNESS PROPERTIES Z25 ACCORDING TO EN10164.

REFERENCE DRAWINGS

1	93M-0407-SEN-6OL11-END-10118-B PAGE 01:17
2	
3	
4	
5	
6	
7	
8	
9	
10	
11	

6TH OF OCTOBER CITY RAIL TRANSIT MONORAIL &
NEW CAPITAL CITY RAIL TRANSIT MONORAIL

The Authority
Hill International
Authority Consultant

ORASCOM CONSTRUCTION
Main Contractor

BOMBARDIER
SENER
SHAKER CONSULTANCY GROUP
Designer

CONTRACTOR/ CONSULTANT:
ENGINEERING HOUSE FOR CONSULTANCY

6 October Monorail
Engineering Unit
Valid For Construction

REV	DATE	BY	DESCRIPTION	CHK	APD
A	20-11-24	M.SH	ISSUE FOR APPROVAL	A.SH	M.M

SCALE: AS SHOWN | SHOP DRAWING | DATE: 20.11.2024

DRAWING TITLE:
6TH OF OCTOBER MONORAIL
SHOP DRAWING FOR BRIDGE 6OL11-37
STEEL TRUSS (I).
L1

Project Code	Rubric	Initiator	Lot	Ref	Number	Revision
93M	0407	ACC	60L11	DWG	90091	A

-Drawing shall be updated according to the comments on the GA drawing.
-Approval is subjected to the approval of coordination package between multi-discipline.

REVIEWED WITH COMMENT
MONORAILS PROJECT

All holes are 22mm U.N.O Length & Area & Weight per piece						
L2	1/2IPE330	S355J0N	2	6599.4	3.83	139.4
Mark	Profile	Grade	QTY	Length	Area	Weight

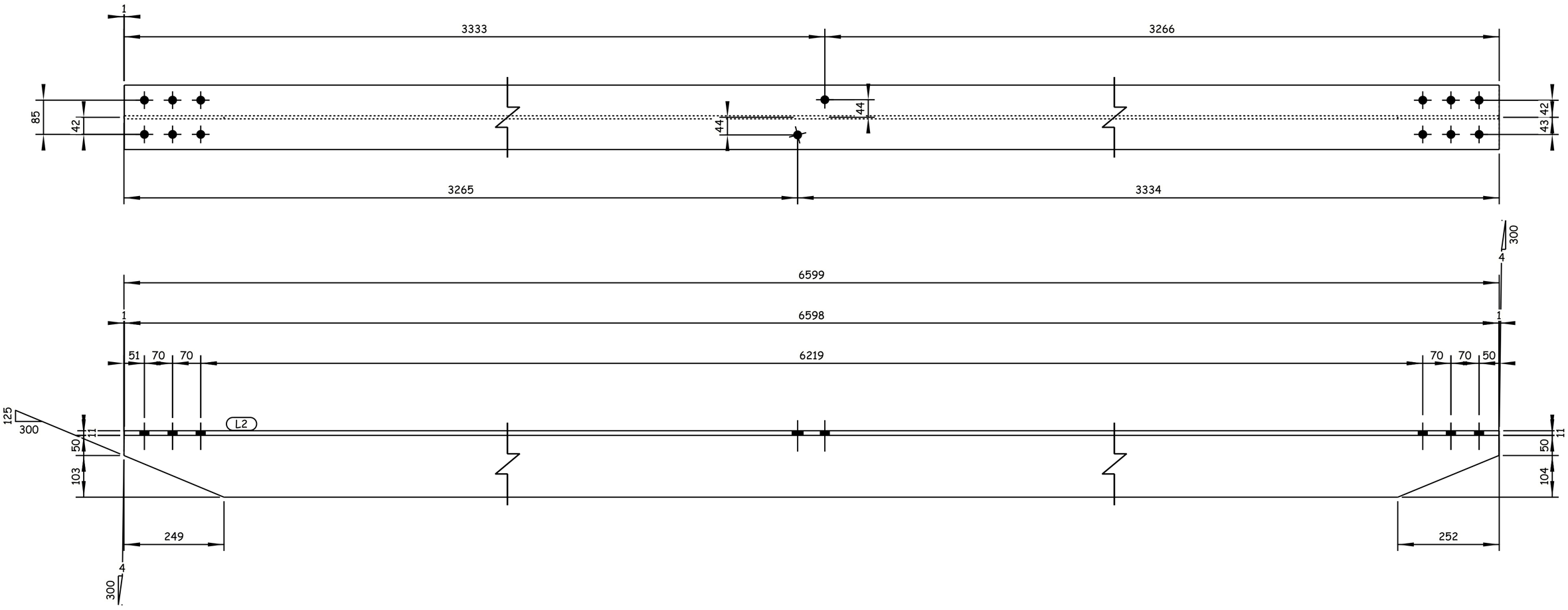

2 REQUIRED AS DRAWN E.SH L2

GENERAL NOTES:

1. ALL DIMENSIONS ARE IN MILLIMETERS UNLESS OTHERWISE SPECIFIED.
2. LEVELS ARE IN METERS
3. DESIGN SERVICE LIFE OF 100 YEARS.
4. FLANGES OF TOP AND BOTTOM CHORDS TO BE SUPPLIED WITH IMPROVED THROUGH THICKNESS PROPERTIES Z25 ACCORDING TO EN10164.

REFERENCE DRAWINGS

1	93M-0407-SEN-6OL11-END-10118-B PAGE 01:17
2	
3	
4	
5	
6	
7	
8	
9	
10	
11	

6TH OF OCTOBER CITY RAIL TRANSIT MONORAIL &
NEW CAPITAL CITY RAIL TRANSIT MONORAIL

The Authority — Hill International Authority Consultant — Main Contractor — Designer

CONTRACTOR / CONSULTANT:

ENGINEERING HOUSE FOR CONSULTANCY

6 October Monorail
Engineering Unit
Valid For Construction

SCALE		SHOP DRAWING	DATE
AS SHOWN			20.11.2024

REV	DATE	BY	DESCRIPTION	CHK	APD
A	20-11-24	M.SH	ISSUE FOR APPROVAL	A.SH	M.M

DRAWING TITLE:
6TH OF OCTOBER MONORAIL
SHOP DRAWING FOR BRIDGE 6OL11-37
STEEL TRUSS (I).
L2

Project Code	Rubric	Initiator	Lot	Ref	Number	Revision
9 3 M	0 4 0 7	A C C	6 0 L 1 1	D W G	90092	A

Tekla structures

-Drawing shall be updated according to the comments on the GA drawing.
-Approval is subjected to the approval of coordination package between multi-discipline.

REVIEWED WITH COMMENT
MONORAILS PROJECT

All holes are 22mm U.N.O Length & Area & Weight per piece

Mark	Profile	Grade	QTY	Length	Area	Weight
L3	1/2IPE330	S355J0N	2	6602.5	3.83	139.4

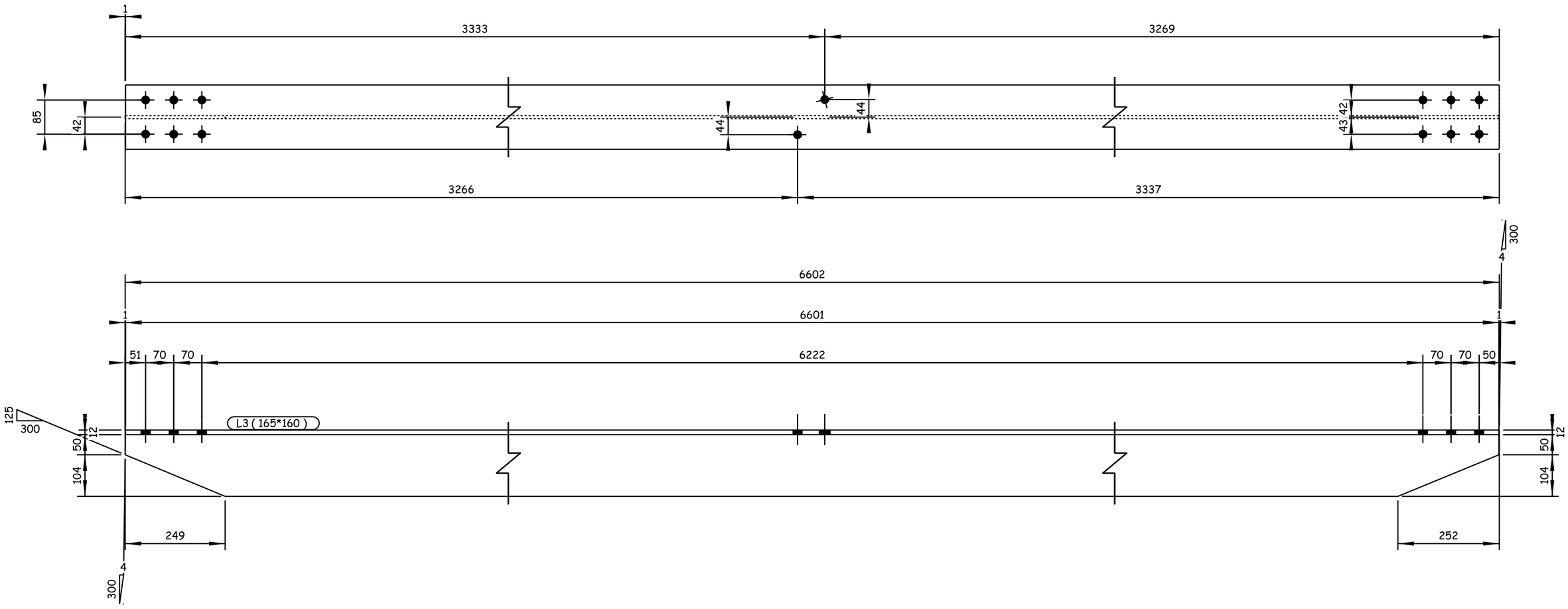

2 REQUIRED AS DRAWN E.SH L3

GENERAL NOTES:

1. ALL DIMENSIONS ARE IN MILLIMETERS UNLESS OTHERWISE SPECIFIED.
2. LEVELS ARE IN METERS
3. DESIGN SERVICE LIFE OF 100 YEARS.
4. FLANGES OF TOP AND BOTTOM CHORDS TO BE SUPPLIED WITH IMPROVED THROUGH THICKNESS PROPERTIES Z25 ACCORDING TO EN10164.

REFERENCE DRAWINGS

1	93M-0407-SEN-6OL11-END-10118-B PAGE 01:17
2	
3	
4	
5	
6	
7	
8	
9	
10	
11	

6TH OF OCTOBER CITY RAIL TRANSIT MONORAIL &
NEW CAPITAL CITY RAIL TRANSIT MONORAIL

The Authority
Hill International
Authority Consultant

Main Contractor

Designer

CONTRACTOR
CONSULTANT:

ENGINEERING HOUSE FOR CONSULTANCY

6 October Monorail
Engineering Unit
Valid For Construction

SCALE: AS SHOWN
SHOP DRAWING
DATE: 20.11.2024

REV	DATE	BY	DESCRIPTION	CHK	APD
A	20-11-24	M.SH	ISSUE FOR APPROVAL	A.SH	M.M

DRAWING TITLE:
6TH OF OCTOBER MONORAIL
SHOP DRAWING FOR BRIDGE 6OL11-37
STEEL TRUSS (I).
L3

Project Code	Rubric	Initiator	Lot	Ref	Number	Revision
9 3 M	0 4 0 7	A C C	6 0 L 1 1	D W G	90093	A

Tekla structures

-Drawing shall be updated according to the comments on the GA drawing.
-Approval is subjected to the approval of coordination package between multi-discipline.

REVIEWED WITH COMMENT
MONORAILS PROJECT

All holes are 22mm U.N.O Length & Area & Weight per piece

Mark	Profile	Grade	QTY	Length	Area	Weight
LP1	PL20*600	S355J2N	8	1309.9	1.65	123.4

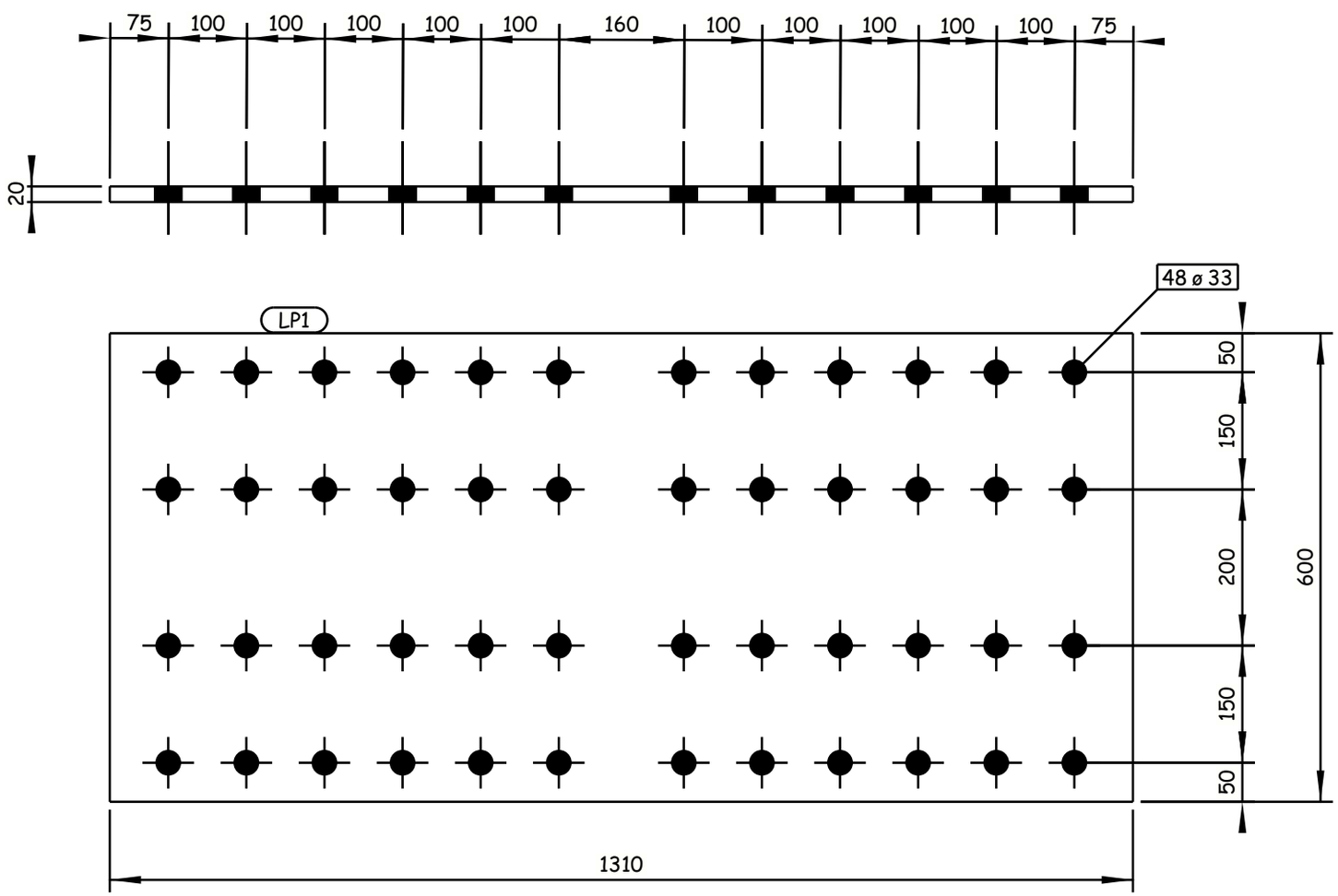

8 REQUIRED AS DRAWN E.SH LP1

Tekla structures

GENERAL NOTES:

1. ALL DIMENSIONS ARE IN MILLIMETERS UNLESS OTHERWISE SPECIFIED.
2. LEVELS ARE IN METERS
3. DESIGN SERVICE LIFE OF 100 YEARS.
4. FLANGES OF TOP AND BOTTOM CHORDS TO BE SUPPLIED WITH IMPROVED THROUGH THICKNESS PROPERTIES Z25 ACCORDING TO EN10164.

REFERENCE DRAWINGS

1	93M-0407-SEN-6OL11-END-10118-B PAGE 01:17
2	
3	
4	
5	
6	
7	
8	
9	
10	
11	

6TH OF OCTOBER CITY RAIL TRANSIT MONORAIL &
NEW CAPITAL CITY RAIL TRANSIT MONORAIL

The Authority
Hill International
Authority Consultant

Main Contractor

Designer

CONTRACTOR / CONSULTANT:

ENGINEERING HOUSE FOR CONSULTANCY

6 October Monorail
Engineering Unit
Valid For Construction

SCALE	SHD DRAWING	DATE
AS SHOWN		20.11.2024

REV	DATE	BY	DESCRIPTION	CHK	APD
A	20-11-24	M.SH	ISSUE FOR APPROVAL	A.SH	M.M

DRAWING TITLE:
6TH OF OCTOBER MONORAIL
SHOP DRAWING FOR BRIDGE 6OL11-37
STEEL TRUSS (I).
LP1

Project Code	Rubric	Initiator	Lot	Ref	Number	Revision
93M	0407	ACC	6OL11	DWG	90094	A

-Drawing shall be updated according to the comments on the GA drawing.
-Approval is subjected to the approval of coordination package between multi-discipline.

REVIEWED WITH COMMENT
MONORAILS PROJECT

All holes are 22mm U.N.O Length & Area & Weight per piece

Mark	Profile	Grade	QTY	Length	Area	Weight
LP2	FLT20*250	S355J2N	16	1309.9	0.72	51.4

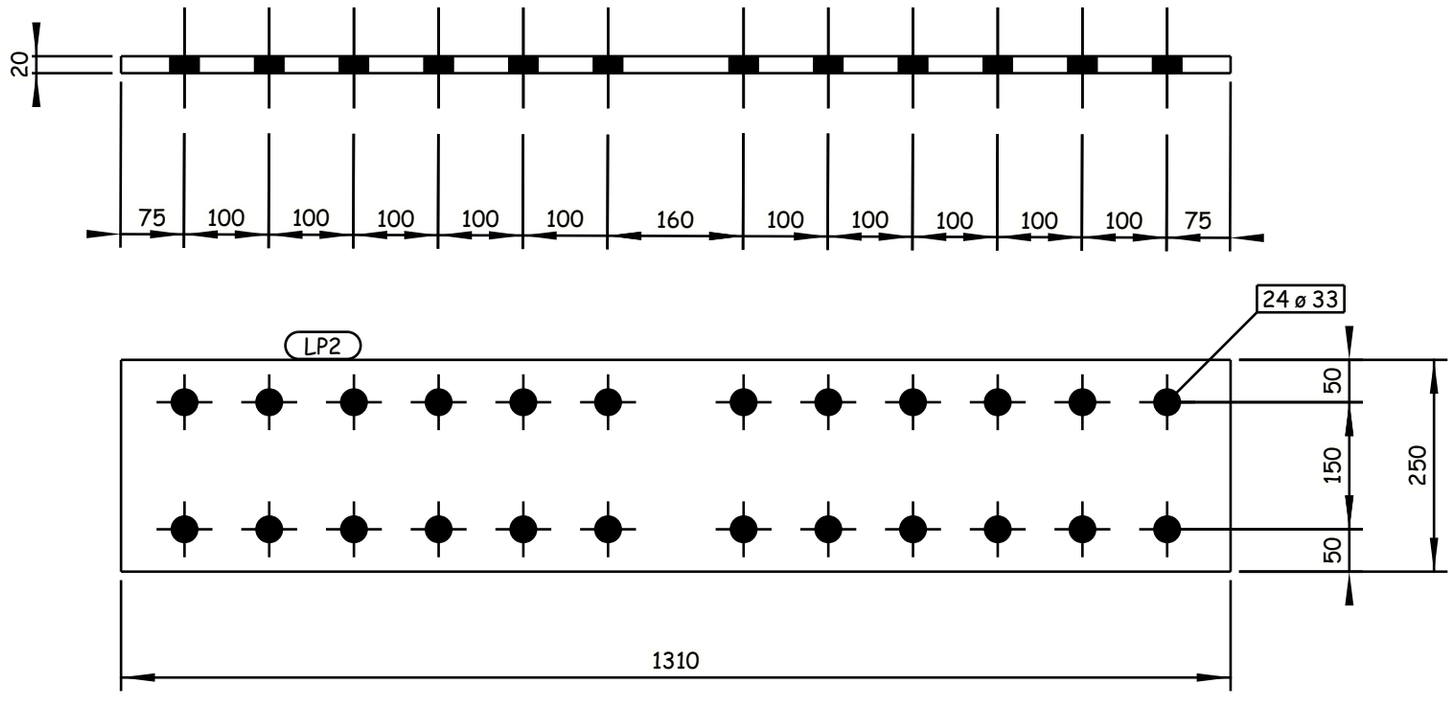

16 REQUIRED AS DRAWN E.SH LP2

GENERAL NOTES:
1. ALL DIMENSIONS ARE IN MILLIMETERS UNLESS OTHERWISE SPECIFIED.
2. LEVELS ARE IN METERS
3. DESIGN SERVICE LIFE OF 100 YEARS.
4. FLANGES OF TOP AND BOTTOM CHORDS TO BE SUPPLIED WITH IMPROVED THROUGH THICKNESS PROPERTIES Z25 ACCORDING TO EN10164.

REFERENCE DRAWINGS

1	93M-0407-SEN-6OL11-END-10118-B PAGE 01:17
2	
3	
4	
5	
6	
7	
8	
9	
10	
11	

6TH OF OCTOBER CITY RAIL TRANSIT MONORAIL &
NEW CAPITAL CITY RAIL TRANSIT MONORAIL

The Authority
Hill International
Authority Consultant

ORASCOM CONSTRUCTION
Main Contractor

BOMBARDIER
SENER
SHAKER CONSULTANCY GROUP
Designer

CONTRACTOR & CONSULTANT:
ENGINEERING HOUSE FOR CONSULTANCY

SCALE: AS SHOWN | CHK'D DRAWING | DATE: 20.11.2024

REV	DATE	BY	DESCRIPTION	CHK	APD
A	20-11-24	M.SH	ISSUE FOR APPROVAL	A.SH	M.M

6 October Monorail
Engineering Unit
Valid For Construction

DRAWING TITLE:
6TH OF OCTOBER MONORAIL
SHOP DRAWING FOR BRIDGE 6OL11-37
STEEL TRUSS (I).
LP2

Project Code	Rubric	Initiator	Lot	Ref	Number	Revision
93M	0407	ACC	6OL11	DWG	90095	A

Tekla structures

-Drawing shall be updated according to the comments on the GA drawing.
-Approval is subjected to the approval of coordination package between multi-discipline.

REVIEWED WITH COMMENT
MONORAILS PROJECT

All holes are 22mm U.N.O Length & Area & Weight per piece

Mark	Profile	Grade	QTY	Length	Area	Weight
LP3	FLT20*450	S355J2N	8	1110.0	1.06	78.4

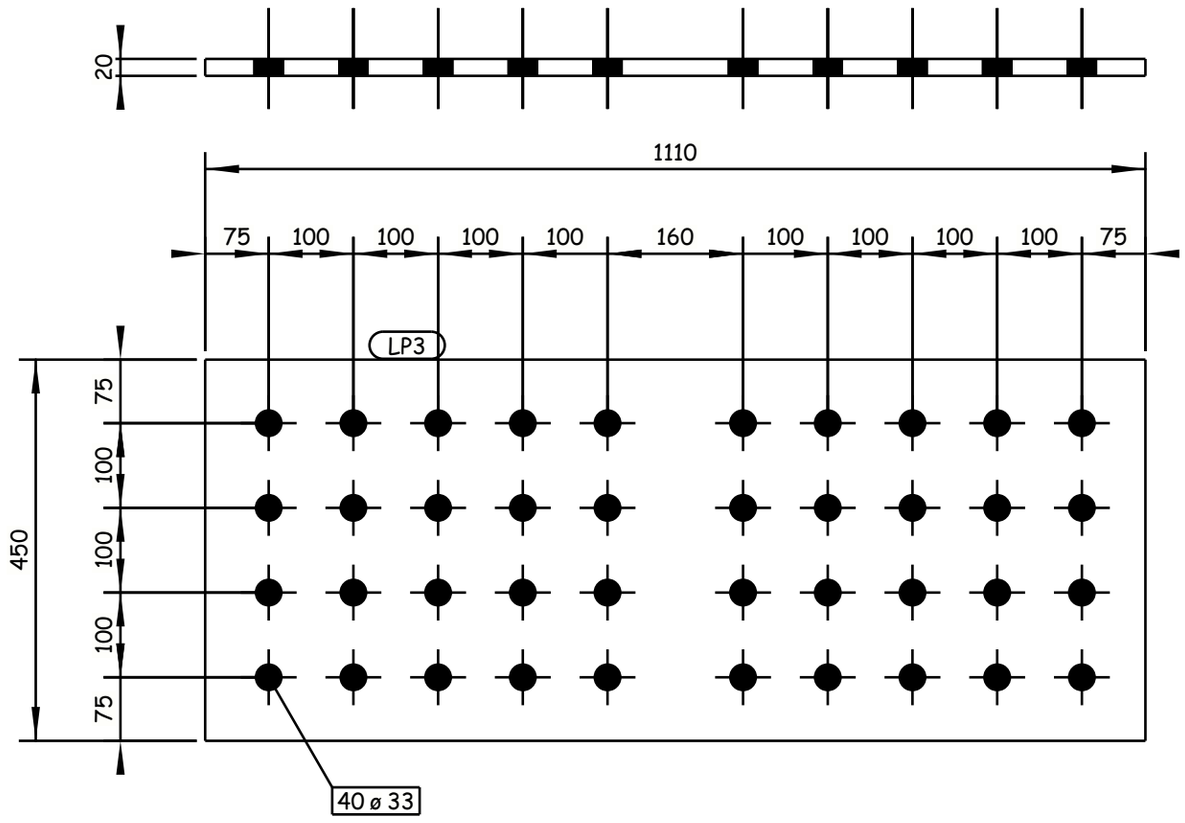

8 REQUIRED AS DRAWN E.SH LP3

GENERAL NOTES:

1. ALL DIMENSIONS ARE IN MILLIMETERS UNLESS OTHERWISE SPECIFIED.
2. LEVELS ARE IN METERS
3. DESIGN SERVICE LIFE OF 100 YEARS.
4. FLANGES OF TOP AND BOTTOM CHORDS TO BE SUPPLIED WITH IMPROVED THROUGH THICKNESS PROPERTIES Z25 ACCORDING TO EN10164.

REFERENCE DRAWINGS

1	93M-0407-SEN-6OL11-END-10118-B PAGE 01:17
2	
3	
4	
5	
6	
7	
8	
9	
10	
11	

6TH OF OCTOBER CITY RAIL TRANSIT MONORAIL &
NEW CAPITAL CITY RAIL TRANSIT MONORAIL

The Authority — Hill International — Authority Consultant
ORASCOM CONSTRUCTION — BOMBARDIER — Main Contractor
SENER — SHAKER CONSULTANCY GROUP — Designer

CONTRACTOR & CONSULTANT:
ENGINEERING HOUSE FOR CONSULTANCY

6 October Monorail
Engineering Unit
Valid For Construction

REV	DATE	BY	DESCRIPTION	CHK	APD
A	20-11-24	M.SH	ISSUE FOR APPROVAL	A.SH	M.M

SCALE: AS SHOWN | SHOP DRAWING | DATE: 20.11.2024

DRAWING TITLE:
6TH OF OCTOBER MONORAIL
SHOP DRAWING FOR BRIDGE 6OL11-37
STEEL TRUSS (I).
LP3

Project Code	Rubric	Initiator	Lot	Ref	Number	Revision
93M	0407	ACC	60L11	DWG	90096	A

Tekla structures

-Drawing shall be updated according to the comments on the GA drawing.
-Approval is subjected to the approval of coordination package between multi-discipline.

REVIEWED WITH COMMENT
MONORAILS PROJECT

All holes are 22mm U.N.O Length & Area & Weight per piece

Mark	Profile	Grade	QTY	Length	Area	Weight
LP4	PL35*710	S355J2N	8	1710.0	2.60	333.6

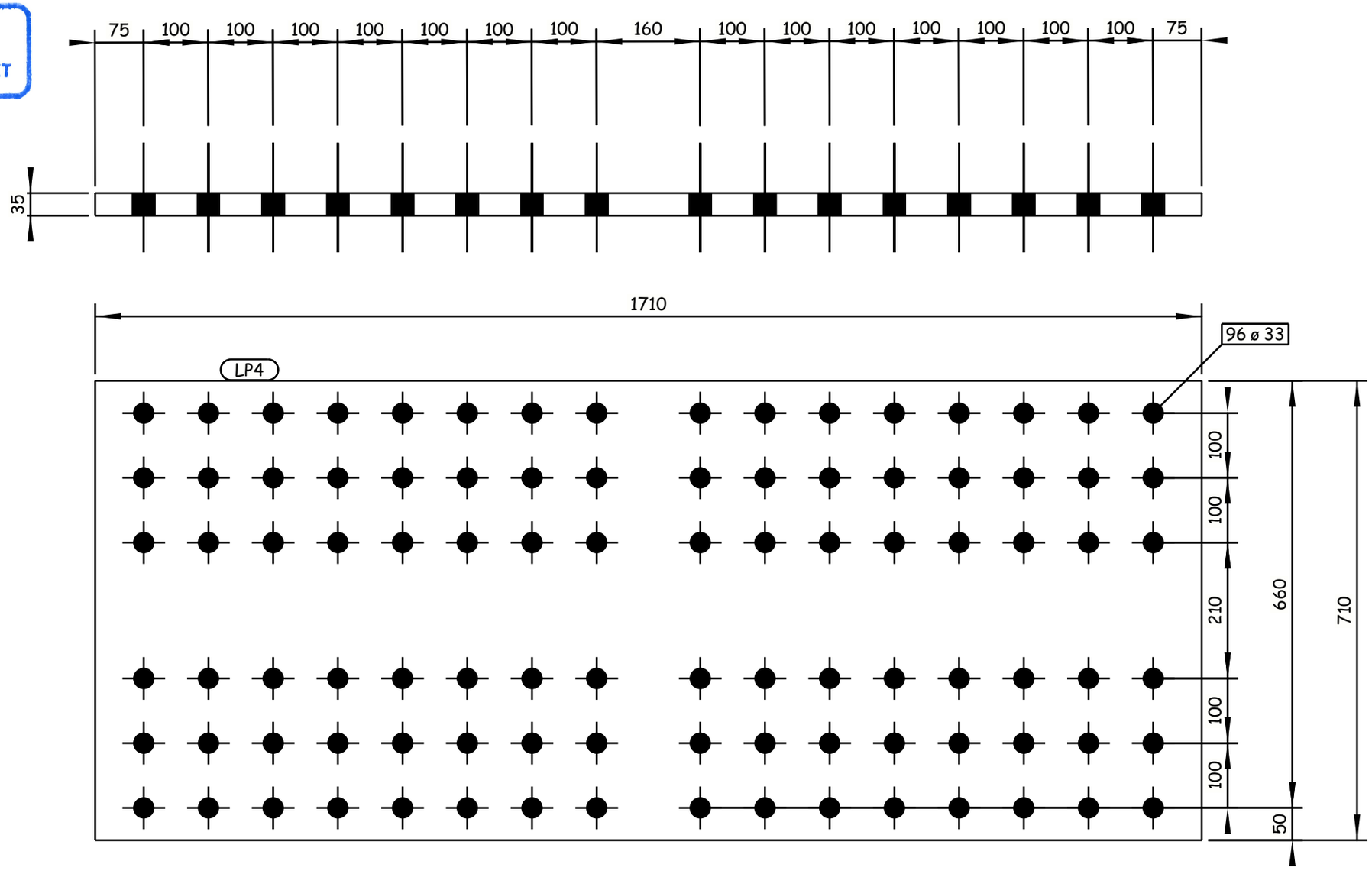

8 REQUIRED AS DRAWN E.SH LP4

GENERAL NOTES:

1. ALL DIMENSIONS ARE IN MILLIMETERS UNLESS OTHERWISE SPECIFIED.
2. LEVELS ARE IN METERS
3. DESIGN SERVICE LIFE OF 100 YEARS.
4. FLANGES OF TOP AND BOTTOM CHORDS TO BE SUPPLIED WITH IMPROVED THROUGH THICKNESS PROPERTIES Z25 ACCORDING TO EN10164.

REFERENCE DRAWINGS

1	93M-0407-SEN-6OL11-END-10118-B PAGE 01:17
2	
3	
4	
5	
6	
7	
8	
9	
10	
11	

6TH OF OCTOBER CITY RAIL TRANSIT MONORAIL &
NEW CAPITAL CITY RAIL TRANSIT MONORAIL

The Authority — Hill International — Authority Consultant
Main Contractor
Designer

CONTRACTOR & CONSULTANT:
ENGINEERING HOUSE FOR CONSULTANCY

6 October Monorail Engineering Unit
Valid For Construction

SCALE	SHOP DRAWING	DATE
AS SHOWN		20.11.2024

REV	DATE	BY	DESCRIPTION	CHK	APD
A	20-11-24	M.SH	ISSUE FOR APPROVAL	A.SH	M.M

DRAWING TITLE:
6TH OF OCTOBER MONORAIL
SHOP DRAWING FOR BRIDGE 6OL11-37
STEEL TRUSS (I).
LP4

Project Code	Rubric	Initiator	Lot	Ref	Number	Revision
93M	0407	ACC	60L11	DWG	90097	A

Tekla structures

-Drawing shall be updated according to the comments on the GA drawing.
-Approval is subjected to the approval of coordination package between multi-discipline.

REVIEWED WITH COMMENT
MONORAILS PROJECT

All holes are 22mm U.N.O Length & Area & Weight per piece

Mark	Profile	Grade	QTY	Length	Area	Weight
LP5	FLT35*300	S355J2N	16	1710.0	1.17	140.9

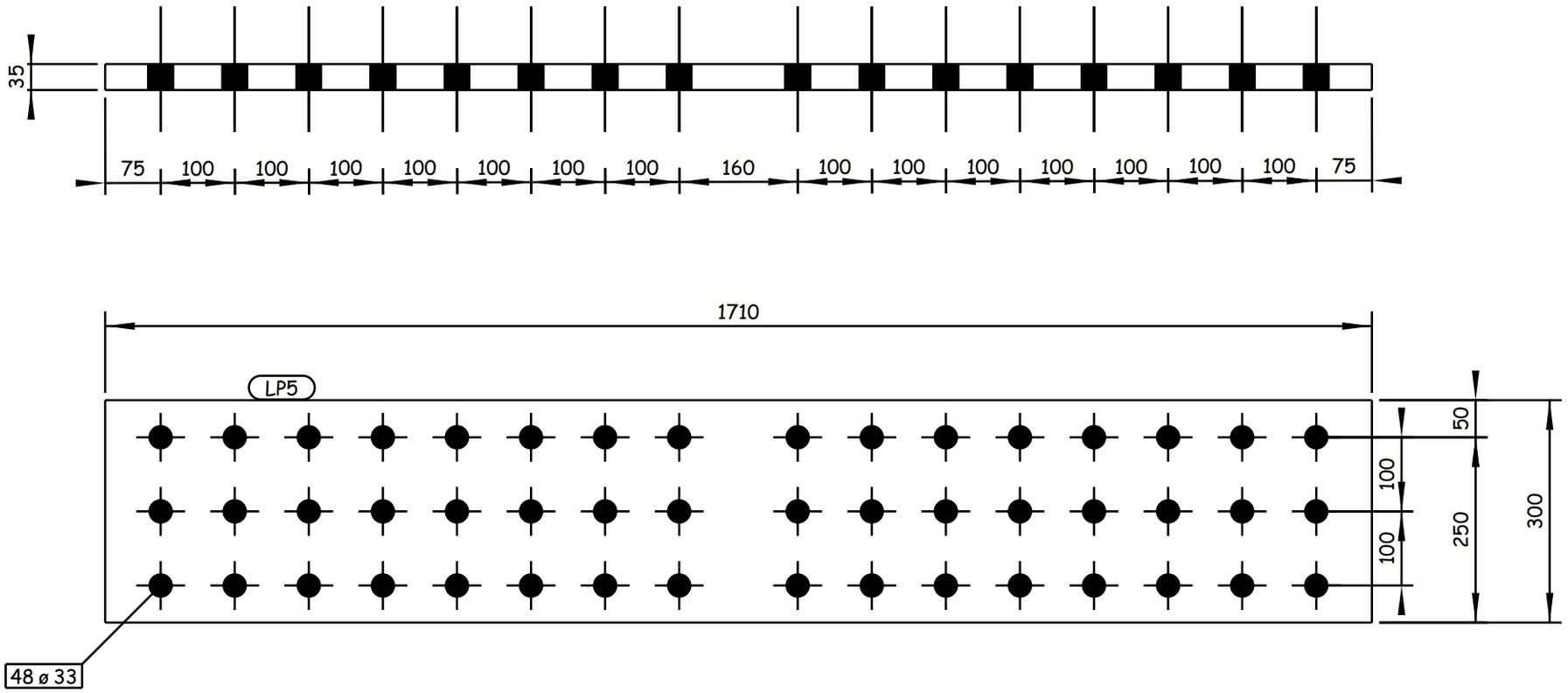

16 REQUIRED AS DRAWN E.SH LP5

6 October Monorail
Engineering Unit
Valid For Construction

Tekla structures

GENERAL NOTES:

1. ALL DIMENSIONS ARE IN MILLIMETERS UNLESS OTHERWISE SPECIFIED.
2. LEVELS ARE IN METERS
3. DESIGN SERVICE LIFE OF 100 YEARS.
4. FLANGES OF TOP AND BOTTOM CHORDS TO BE SUPPLIED WITH IMPROVED THROUGH THICKNESS PROPERTIES Z25 ACCORDING TO EN10164.

REFERENCE DRAWINGS

1	93M-0407-SEN-6OL11-END-10118-B PAGE 01:17
2	
3	
4	
5	
6	
7	
8	
9	
10	
11	

6TH OF OCTOBER CITY RAIL TRANSIT MONORAIL &
NEW CAPITAL CITY RAIL TRANSIT MONORAIL

The Authority
Hill International
Authority Consultant

Main Contractor

Designer

CONTRACTOR
CONSULTANT:
ENGINEERING HOUSE FOR CONSULTANCY

SCALE: AS SHOWN | SHD/DRAWING | DATE: 20.11.2024

DRAWING TITLE:
6TH OF OCTOBER MONORAIL
SHOP DRAWING FOR BRIDGE 6OL11-37
STEEL TRUSS (I).
LP5

REV	DATE	BY	DESCRIPTION	CHK	APD
A	20-11-24	M.SH	ISSUE FOR APPROVAL	A.SH	M.M

Project Code	Rubric	Initiator	Lot	Ref	Number	Revision
93M	0407	ACC	60L11	DWG	90098	A

-Drawing shall be updated according to the comments on the GA drawing.
-Approval is subjected to the approval of coordination package between multi-discipline.

REVIEWED WITH COMMENT
MONORAILS PROJECT

All holes are 22mm U.N.O Length & Area & Weight per piece

Mark	Profile	Grade	QTY	Length	Area	Weight
LP6	FLT20*350	S355J2N	8	1110.0	0.84	61.0

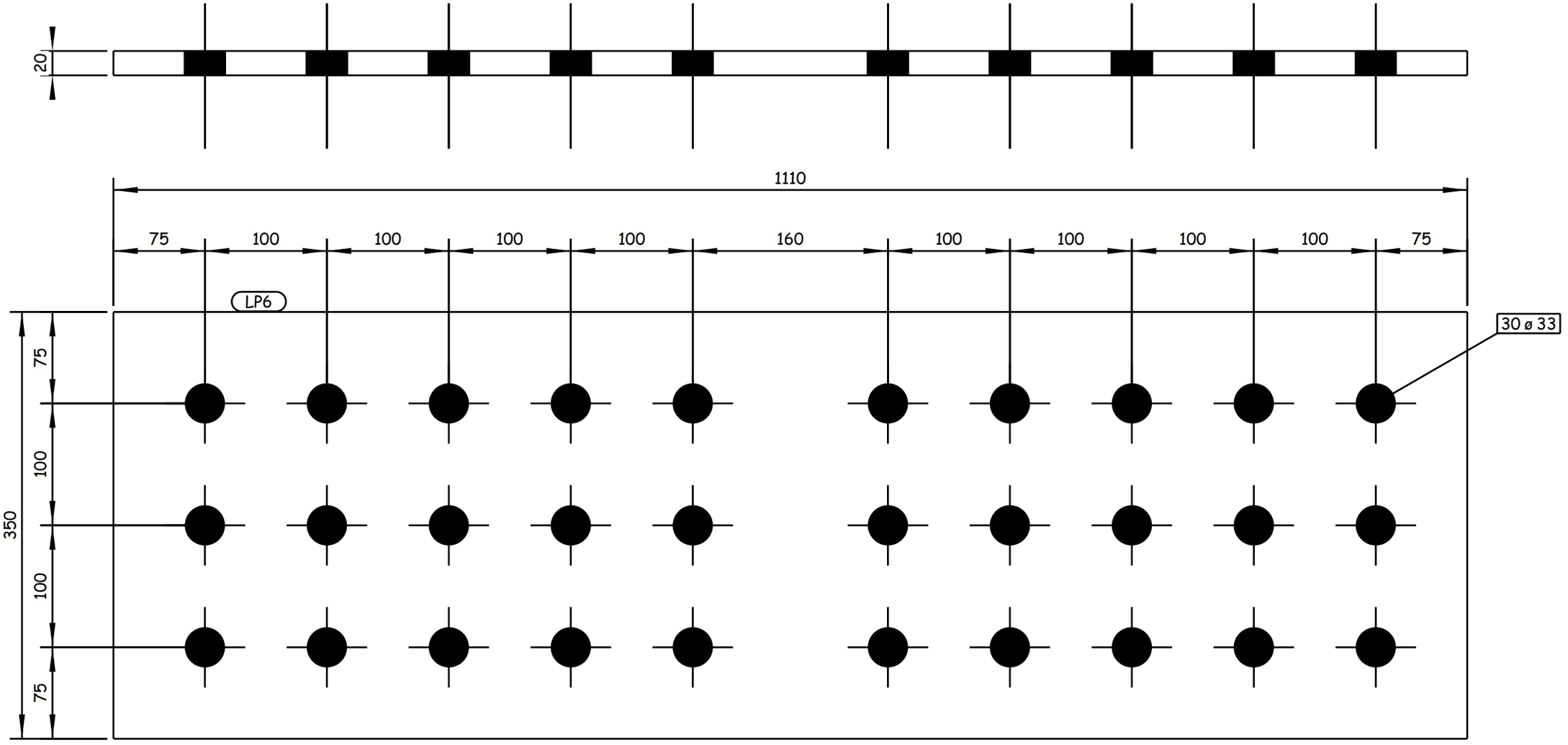

8 REQUIRED AS DRAWN E.SH LP6

6 October: Monorail
Engineering Unit
Valid For Construction

Tekla structures

GENERAL NOTES:

1. ALL DIMENSIONS ARE IN MILLIMETERS UNLESS OTHERWISE SPECIFIED.
2. LEVELS ARE IN METERS
3. DESIGN SERVICE LIFE OF 100 YEARS.
4. FLANGES OF TOP AND BOTTOM CHORDS TO BE SUPPLIED WITH IMPROVED THROUGH THICKNESS PROPERTIES Z25 ACCORDING TO EN10164.

REFERENCE DRAWINGS

1	93M-0407-SEN-6OL11-END-10118-B PAGE 01:17
2	
3	
4	
5	
6	
7	
8	
9	
10	
11	

6TH OF OCTOBER CITY RAIL TRANSIT MONORAIL &
NEW CAPITAL CITY RAIL TRANSIT MONORAIL

The Authority — Hill International Authority Consultant

ORASCOM CONSTRUCTION — Main Contractor

BOMBARDIER

SENER — SHAKER CONSULTING GROUP — Designer

CONTRACTOR / CONSULTANT:
ENGINEERING HOUSE FOR CONSULTANCY

SCALE: AS SHOWN | CHK'D DRWING | DATE: 20.11.2024

REV	DATE	BY	DESCRIPTION	CHK	APD
A	20-11-24	M.SH	ISSUE FOR APPROVAL	A.SH	M.M

DRAWING TITLE:
6TH OF OCTOBER MONORAIL
SHOP DRAWING FOR BRIDGE 6OL11-37
STEEL TRUSS (I).
LP6

Project Code	Rubric	Initiator	Lot	Ref	Number	Revision
93M	0407	ACC	6OL11	DWG	90099	A

-Drawing shall be updated according to the comments on the GA drawing.
-Approval is subjected to the approval of coordination package between multi-discipline.

REVIEWED WITH COMMENT
MONORAILS PROJECT

All holes are 22mm U.N.O Length & Area & Weight per piece

Mark	Profile	Grade	QTY	Length	Area	Weight
LP24	PL15*370	S355J2N	8	570.0	0.45	24.8

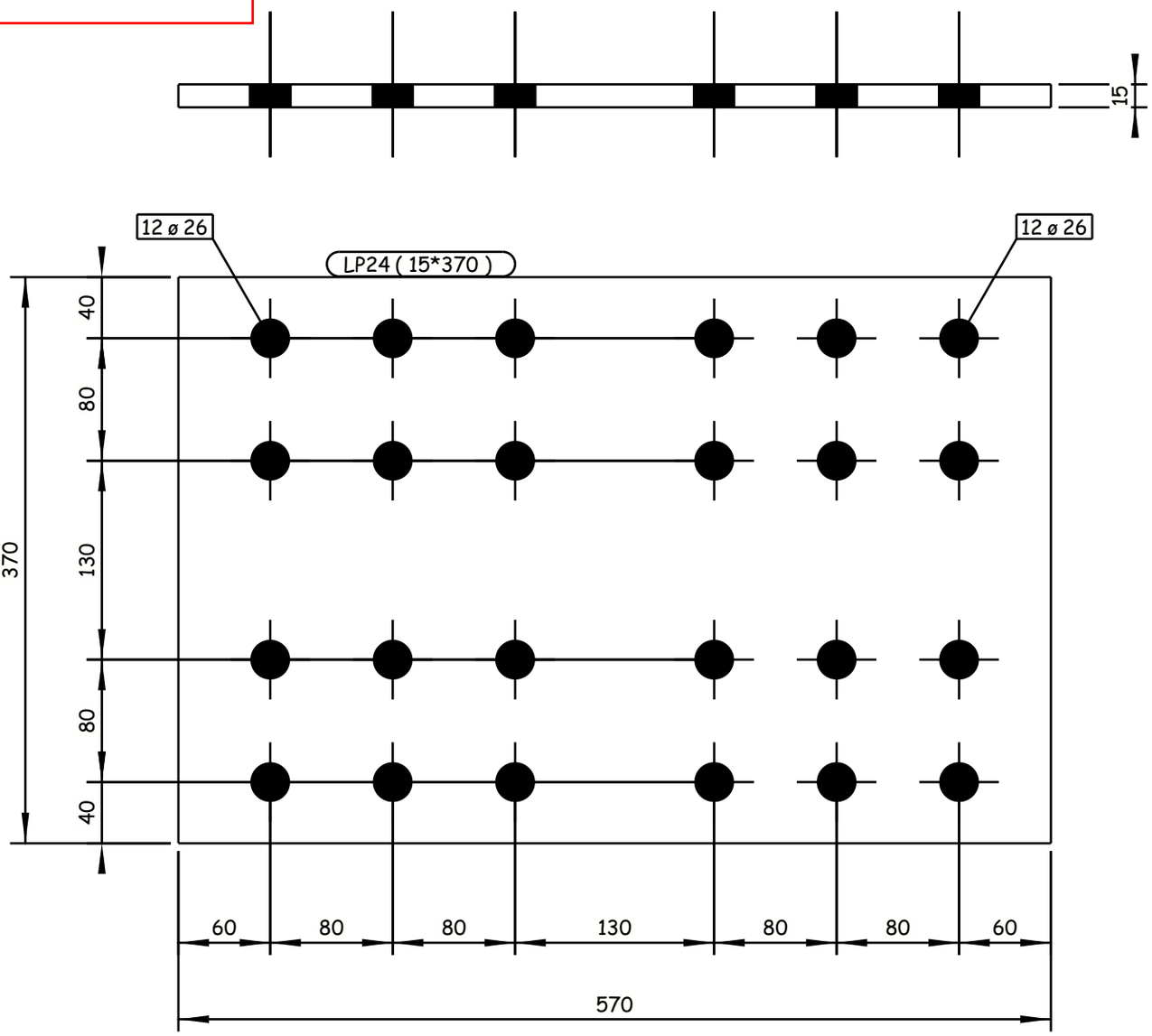

8 REQUIRED AS DRAWN E.SH LP24

GENERAL NOTES:

1. ALL DIMENSIONS ARE IN MILLIMETERS UNLESS OTHERWISE SPECIFIED.
2. LEVELS ARE IN METERS
3. DESIGN SERVICE LIFE OF 100 YEARS.
4. FLANGES OF TOP AND BOTTOM CHORDS TO BE SUPPLIED WITH IMPROVED THROUGH THICKNESS PROPERTIES Z25 ACCORDING TO EN10164.

REFERENCE DRAWINGS

1	93M-0407-SEN-6OL11-END-10118-B PAGE 01:17
2	
3	
4	
5	
6	
7	
8	
9	
10	
11	

6TH OF OCTOBER CITY RAIL TRANSIT MONORAIL &
NEW CAPITAL CITY RAIL TRANSIT MONORAIL

The Authority
Hill International
Authority Consultant

Main Contractor

Designer

CONTRACTOR / CONSULTANT:
ENGINEERING HOUSE FOR CONSULTANCY

6 October Monorail
Engineering Unit
Valid For Construction

SCALE: AS SHOWN | CHD DRAWING | DATE: 20.11.2024

DRAWING TITLE:
6TH OF OCTOBER MONORAIL
SHOP DRAWING FOR BRIDGE 6OL11-37
STEEL TRUSS (I).
LP24

REV	DATE	BY	DESCRIPTION	CHK	APD
A	20-11-24	M.SH	ISSUE FOR APPROVAL	A.SH	M.M

Project Code	Rubric	Initiator	Lot	Ref	Number	Revision
93M	0407	ACC	60L11	DWG	90100	A

Tekla structures

-Drawing shall be updated according to the comments on the GA drawing.
-Approval is subjected to the approval of coordination package between multi-discipline.

REVIEWED WITH COMMENT
MONORAILS PROJECT

All holes are 22mm U.N.O Length & Area & Weight per piece

Mark	Profile	Grade	QTY	Length	Area	Weight
LP25	PL15*160	S355J2N	8	570.0	0.20	10.7

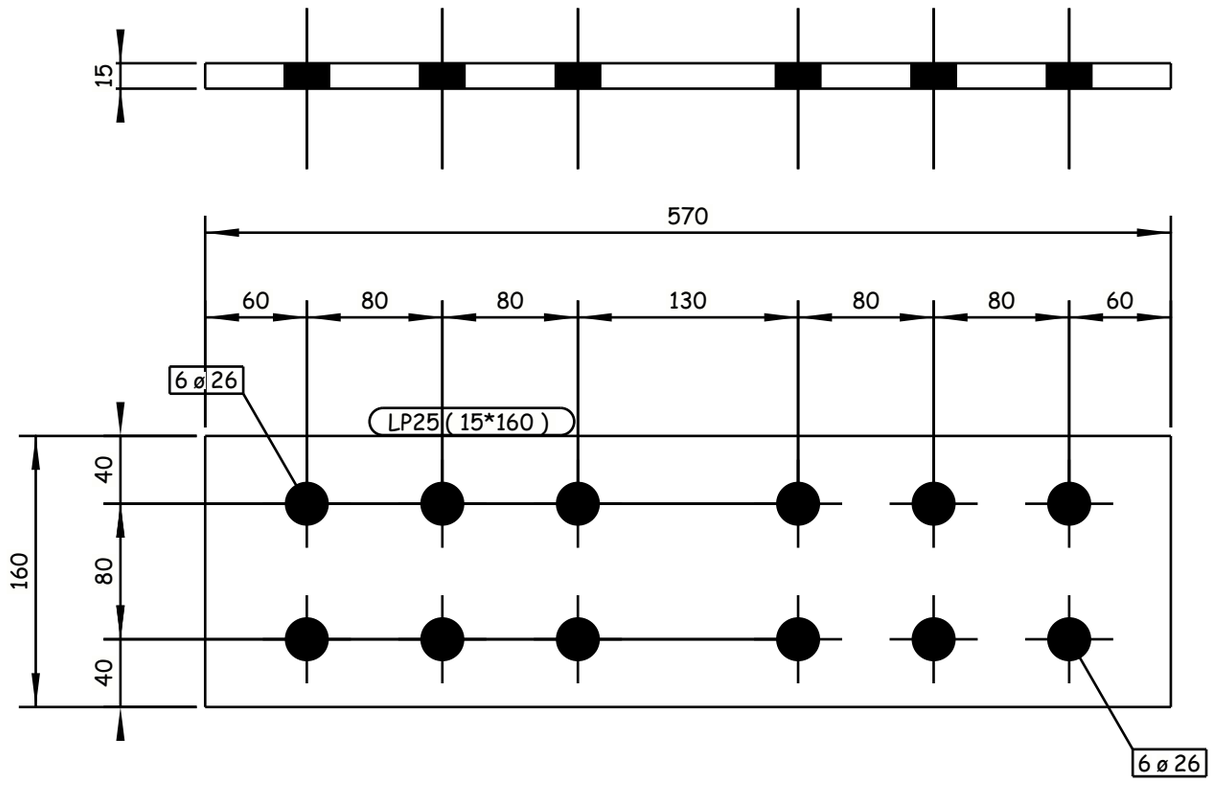

8 REQUIRED AS DRAWN E.SH LP25

GENERAL NOTES:

1. ALL DIMENSIONS ARE IN MILLIMETERS UNLESS OTHERWISE SPECIFIED.
2. LEVELS ARE IN METERS
3. DESIGN SERVICE LIFE OF 100 YEARS.
4. FLANGES OF TOP AND BOTTOM CHORDS TO BE SUPPLIED WITH IMPROVED THROUGH THICKNESS PROPERTIES Z25 ACCORDING TO EN10164.

REFERENCE DRAWINGS

1	93M-0407-SEN-6OL11-END-10118-B PAGE 01:17
2	
3	
4	
5	
6	
7	
8	
9	
10	
11	

6TH OF OCTOBER CITY RAIL TRANSIT MONORAIL &
NEW CAPITAL CITY RAIL TRANSIT MONORAIL

The Authority | Hill International Authority Consultant | ORASCOM CONSTRUCTION | Main Contractor | BOMBARDIER | SENER | SHAKER CONSULTANCY GROUP | Designer

CONTRACTOR & CONSULTANT:
ENGINEERING HOUSE FOR CONSULTANCY

SCALE: AS SHOWN | CHK'D DRAWING | DATE: 20.11.2024

REV	DATE	BY	DESCRIPTION	CHK	APD
A	20-11-24	M.SH	ISSUE FOR APPROVAL	A.SH	M.M

6 October Monorail
Engineering Unit
Valid For Construction

DRAWING TITLE:
6TH OF OCTOBER MONORAIL
SHOP DRAWING FOR BRIDGE 6OL11-37
STEEL TRUSS (I).
LP25

Project Code	Rubric	Initiator	Lot	Ref	Number	Revision
93M	0407	ACC	6OL11	DWG	90101	A

Tekla structures

-Drawing shall be updated according to the comments on the GA drawing.
-Approval is subjected to the approval of coordination package between multi-discipline.

REVIEWED WITH COMMENT
MONORAILS PROJECT

All holes are 22mm U.N.O Length & Area & Weight per piece

Mark	Profile	Grade	QTY	Length	Area	Weight
LP26	PL15*166	S355J2N	8	570.0	0.21	11.1

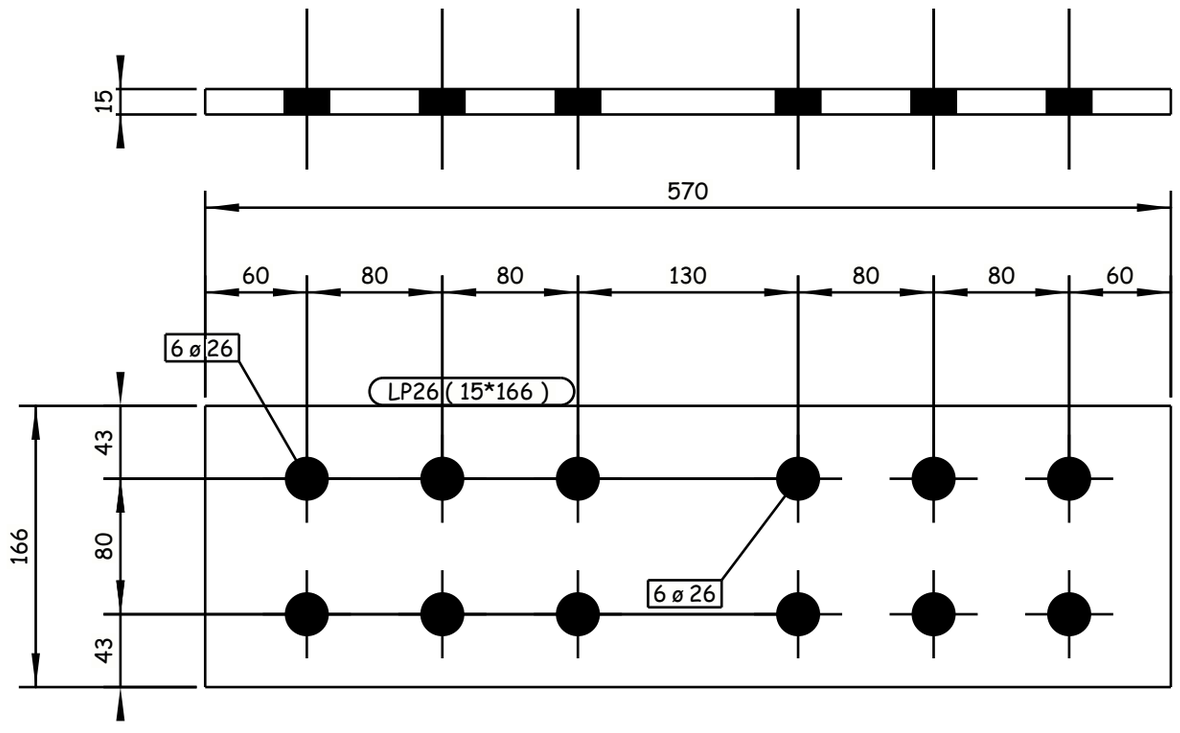

8 REQUIRED AS DRAWN E.SH LP26

GENERAL NOTES:

1. ALL DIMENSIONS ARE IN MILLIMETERS UNLESS OTHERWISE SPECIFIED.
2. LEVELS ARE IN METERS
3. DESIGN SERVICE LIFE OF 100 YEARS.
4. FLANGES OF TOP AND BOTTOM CHORDS TO BE SUPPLIED WITH IMPROVED THROUGH THICKNESS PROPERTIES Z25 ACCORDING TO EN10164.

REFERENCE DRAWINGS

1	93M-0407-SEN-6OL11-END-10118-B PAGE 01:17
2	
3	
4	
5	
6	
7	
8	
9	
10	
11	

6TH OF OCTOBER CITY RAIL TRANSIT MONORAIL &
NEW CAPITAL CITY RAIL TRANSIT MONORAIL

The Authority
Hill International
Authority Consultant

ORASCOM CONSTRUCTION
Main Contractor

BOMBARDIER
SENER
SHAKER CONSULTANCY GROUP
Designer

CONTRACTOR / CONSULTANT:
ENGINEERING HOUSE FOR CONSULTANCY

SCALE: AS SHOWN
CHK DRAWING
DATE: 20.11.2024

REV	DATE	BY	DESCRIPTION	CHK	APD
A	20-11-24	M.SH	ISSUE FOR APPROVAL	A.SH	M.M

6 October Monorail
Engineering Unit
Valid For Construction

DRAWING TITLE:
6TH OF OCTOBER MONORAIL
SHOP DRAWING FOR BRIDGE 6OL11-37
STEEL TRUSS (I).
LP26

Project Code	Rubric	Initiator	Lot	Ref	Number	Revision
93M	0407	ACC	60L11	DWG	90102	A

Tekla structures

-Drawing shall be updated according to the comments on the GA drawing.
-Approval is subjected to the approval of coordination package between multi-discipline.

REVIEWED WITH COMMENT
MONORAILS PROJECT

All holes are 22mm U.N.O Length & Area & Weight per piece

Mark	Profile	Grade	QTY	Length	Area	Weight
LP27	PL10*280	S355J2N	8	410.0	0.24	9.0

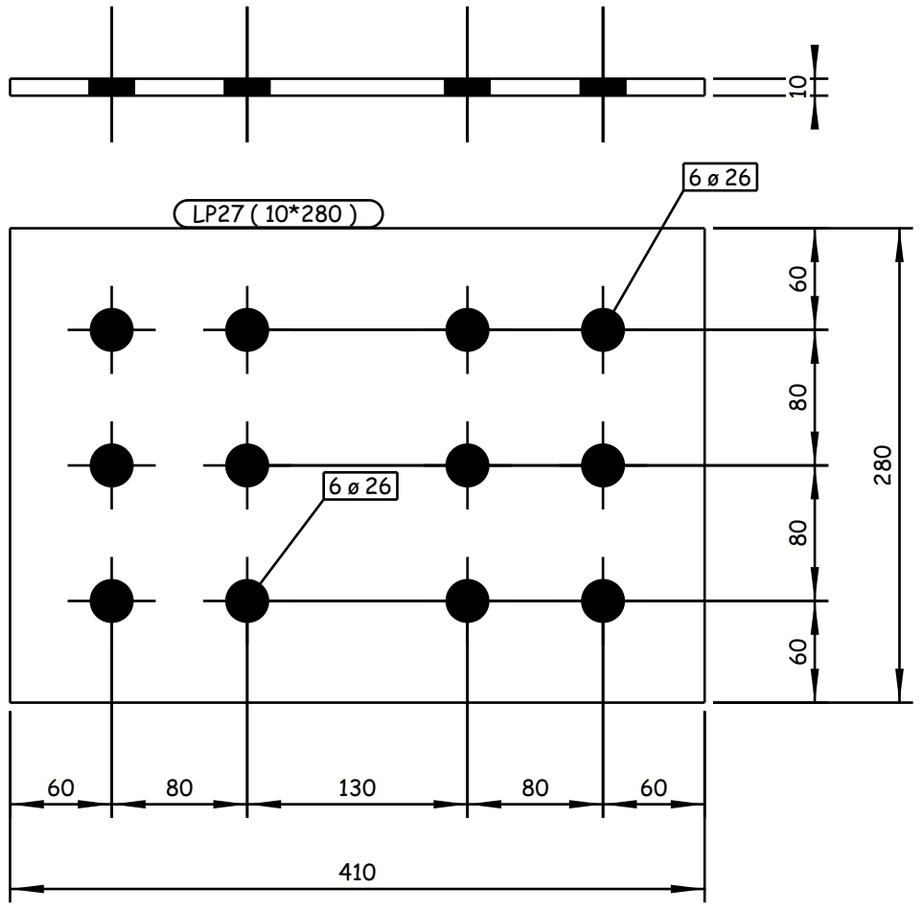

8 REQUIRED AS DRAWN E.SH LP27

GENERAL NOTES:

1. ALL DIMENSIONS ARE IN MILLIMETERS UNLESS OTHERWISE SPECIFIED.
2. LEVELS ARE IN METERS
3. DESIGN SERVICE LIFE OF 100 YEARS.
4. FLANGES OF TOP AND BOTTOM CHORDS TO BE SUPPLIED WITH IMPROVED THROUGH THICKNESS PROPERTIES Z25 ACCORDING TO EN10164.

REFERENCE DRAWINGS

1	93M-0407-SEN-6OL11-END-10118-B PAGE 01:17
2	
3	
4	
5	
6	
7	
8	
9	
10	
11	

6TH OF OCTOBER CITY RAIL TRANSIT MONORAIL &
NEW CAPITAL CITY RAIL TRANSIT MONORAIL

The Authority
Hill International
Authority Consultant

ORASCOM CONSTRUCTION
Main Contractor

BOMBARDIER
SENER
SHAKER CONSULTANCY GROUP
Designer

CONTRACTOR & CONSULTANT :
ENGINEERING HOUSE FOR CONSULTANCY

SCALE AS SHOWN | CHK'D DRWING | DATE 20.11.2024

DRAWING TITLE:
6TH OF OCTOBER MONORAIL
SHOP DRAWING FOR BRIDGE 6OL11-37
STEEL TRUSS (I).
LP27

REV	DATE	BY	DESCRIPTION	CHK	APD
A	20-11-24	M.SH	ISSUE FOR APPROVAL	A.SH	M.M

Project Code	Rubric	Initiator	Lot	Ref	Number	Revision
9 3 M	0 4 0 7	A C C	6 0 L 1 1	D W G	90103	A

6 October Monorail
Engineering Unit
Valid For Construction

Tekla structures

-Drawing shall be updated according to the comments on the GA drawing.
-Approval is subjected to the approval of coordination package between multi-discipline.

REVIEWED WITH COMMENT
MONORAILS PROJECT

All holes are 22mm U.N.O Length & Area & Weight per piece

Mark	Profile	Grade	QTY	Length	Area	Weight
LP29	PL15*240	S355J2N	60	730.0	0.38	20.6

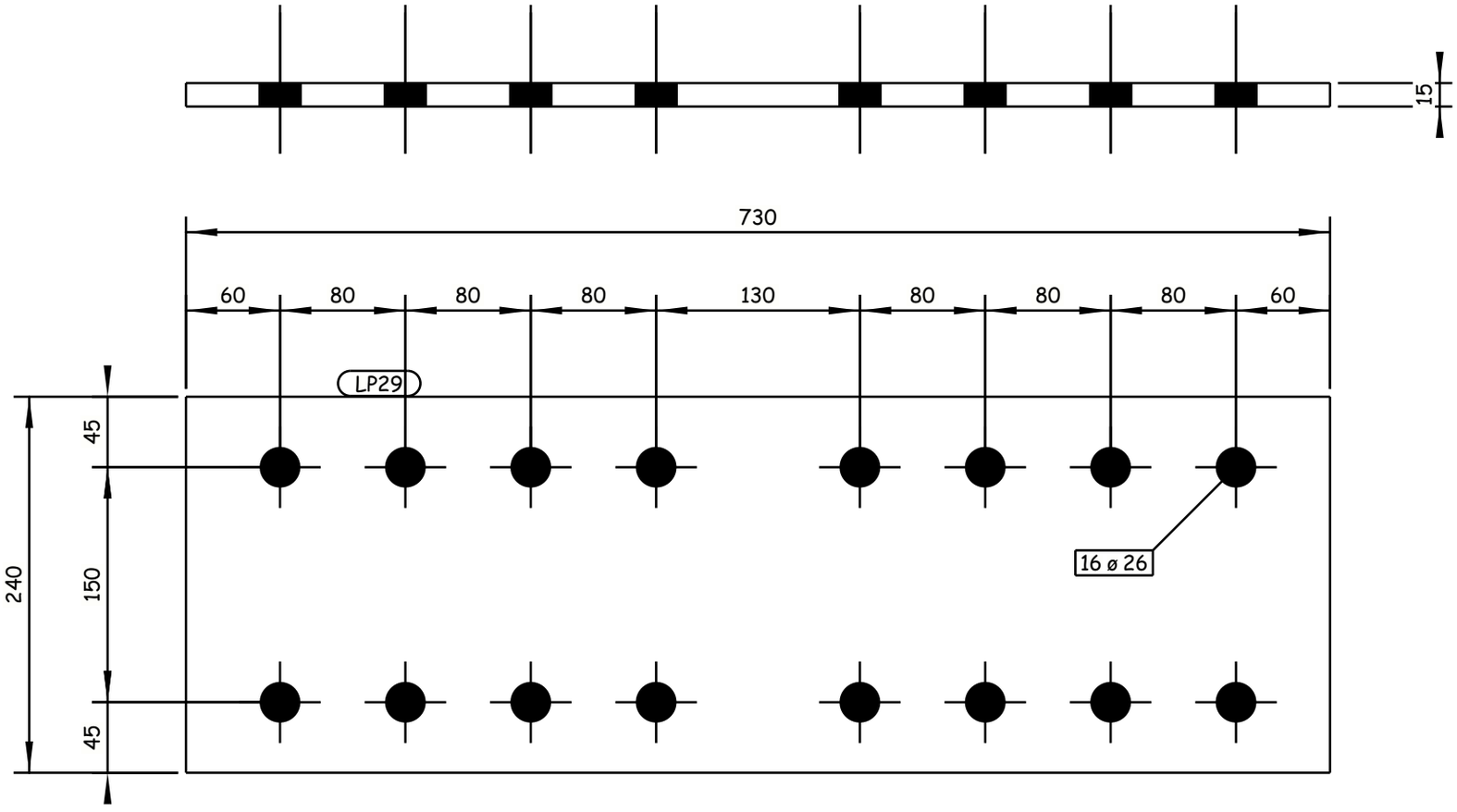

60 REQUIRED AS DRAWN E.SH LP29

GENERAL NOTES:

1. ALL DIMENSIONS ARE IN MILLIMETERS UNLESS OTHERWISE SPECIFIED.
2. LEVELS ARE IN METERS
3. DESIGN SERVICE LIFE OF 100 YEARS.
4. FLANGES OF TOP AND BOTTOM CHORDS TO BE SUPPLIED WITH IMPROVED THROUGH THICKNESS PROPERTIES Z25 ACCORDING TO EN10164.

REFERENCE DRAWINGS

1	93M-0407-SEN-6OL11-END-10118-B PAGE 01:17
2	
3	
4	
5	
6	
7	
8	
9	
10	
11	

6TH OF OCTOBER CITY RAIL TRANSIT MONORAIL &
NEW CAPITAL CITY RAIL TRANSIT MONORAIL

The Authority — Hill International Authority Consultant — Main Contractor — Designer

CONTRACTOR & CONSULTANT:

ENGINEERING HOUSE FOR CONSULTANCY

6 October Monorail Engineering Unit
Valid For Construction

SCALE	SHD DRAWING	DATE
AS SHOWN		20.11.2024

REV	DATE	BY	DESCRIPTION	CHK	APD
A	20-11-24	M.SH	ISSUE FOR APPROVAL	A.SH	M.M

DRAWING TITLE:
6TH OF OCTOBER MONORAIL
SHOP DRAWING FOR BRIDGE 6OL11-37
STEEL TRUSS (I).
LP29

Project Code	Rubric	Initiator	Lot	Ref	Number	Revision
93M	0407	ACC	60L11	DWG	90104	A

Tekla structures

-Drawing shall be updated according to the comments on the GA drawing.
-Approval is subjected to the approval of coordination package between multi-discipline.

REVIEWED WITH COMMENT
MONORAILS PROJECT

All holes are 22mm U.N.O Length & Area & Weight per piece

Mark	Profile	Grade	QTY	Length	Area	Weight
LP30	FLT15*90	S355J2N	120	730.0	0.16	7.7

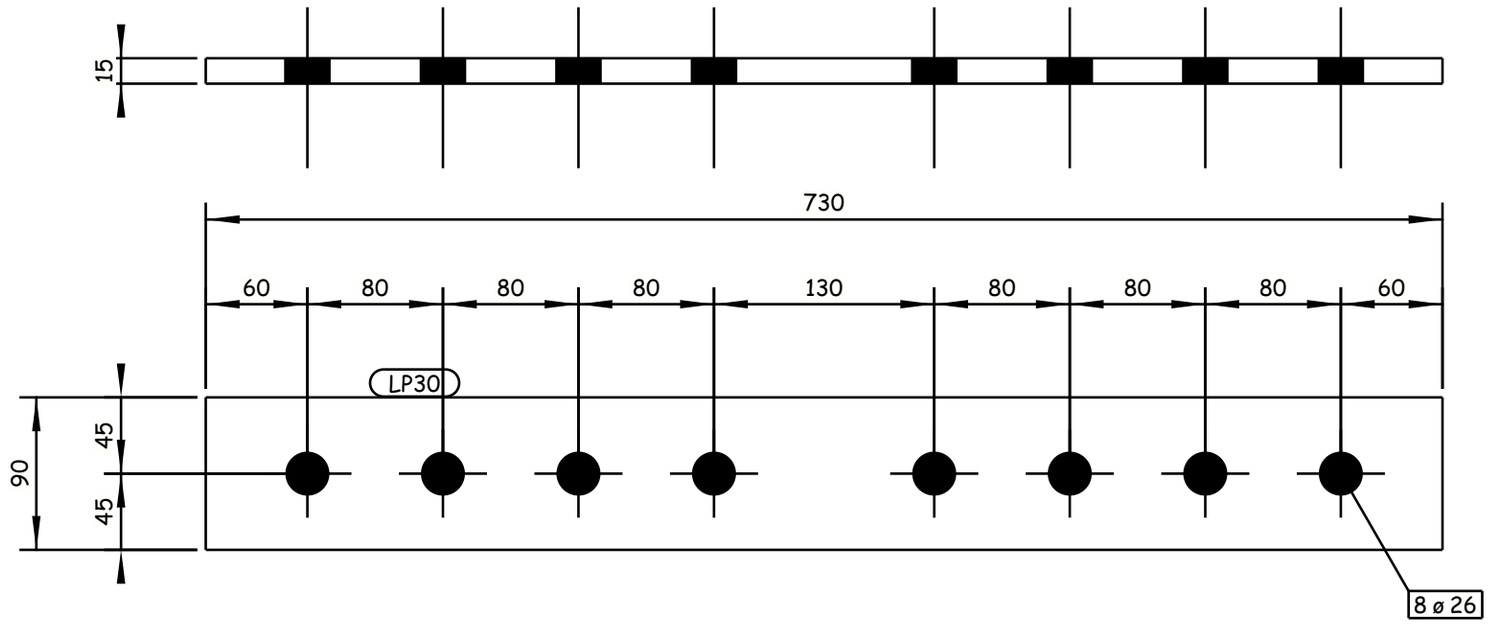

120 REQUIRED AS DRAWN E.SH LP30

Tekla structures

GENERAL NOTES:

1. ALL DIMENSIONS ARE IN MILLIMETERS UNLESS OTHERWISE SPECIFIED.
2. LEVELS ARE IN METERS
3. DESIGN SERVICE LIFE OF 100 YEARS.
4. FLANGES OF TOP AND BOTTOM CHORDS TO BE SUPPLIED WITH IMPROVED THROUGH THICKNESS PROPERTIES Z25 ACCORDING TO EN10164.

REFERENCE DRAWINGS

1	93M-0407-SEN-6OL11-END-10118-B PAGE 01:17
2	
3	
4	
5	
6	
7	
8	
9	
10	
11	

6TH OF OCTOBER CITY RAIL TRANSIT MONORAIL &
NEW CAPITAL CITY RAIL TRANSIT MONORAIL

The Authority
Hill International
Authority Consultant

Main Contractor

Designer

CONTRACTOR & CONSULTANT:
ENGINEERING HOUSE FOR CONSULTANCY

6 October Monorail
Engineering Unit
Valid For Cönstruction

SCALE	CHD DRAWING	DATE
AS SHOWN		20.11.2024

REV	DATE	BY	DESCRIPTION	CHK	APD
A	20-11-24	M.SH	ISSUE FOR APPROVAL	A.SH	M.M

DRAWING TITLE:
6TH OF OCTOBER MONORAIL
SHOP DRAWING FOR BRIDGE 6OL11-37
STEEL TRUSS (I).
LP30

Project Code	Rubric	Initiator	Lot	Ref	Number	Revision
93M	0407	ACC	60L11	DWG	90105	A

-Drawing shall be updated according to the comments on the GA drawing.
-Approval is subjected to the approval of coordination package between multi-discipline.

REVIEWED WITH COMMENT
MONORAILS PROJECT

All holes are 22mm U.N.O Length & Area & Weight per piece

Mark	Profile	Grade	QTY	Length	Area	Weight
LP31	PL10*440	S355J2N	60	570.0	0.52	19.7

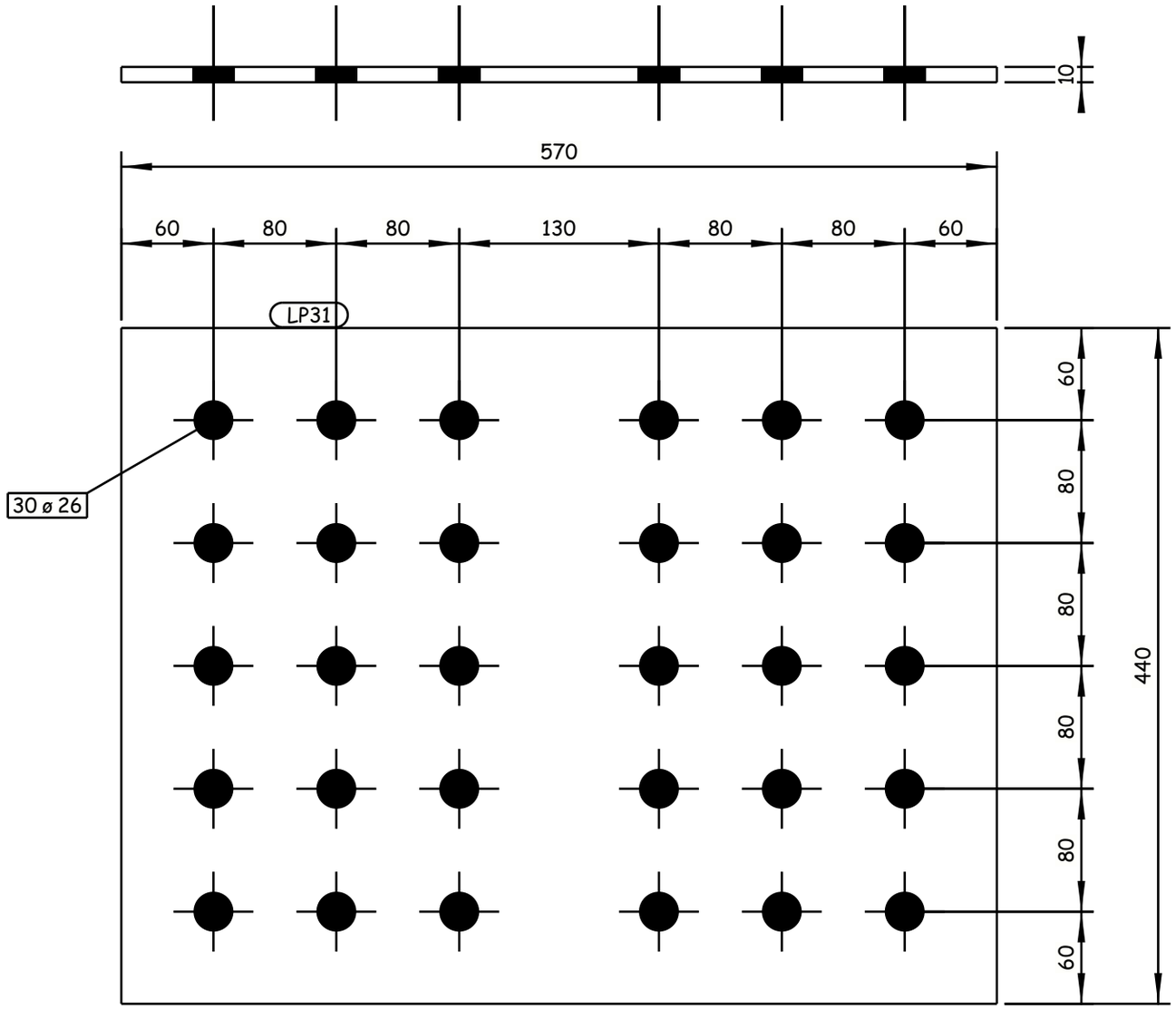

60 REQUIRED AS DRAWN E.SH LP31

Tekla structures

GENERAL NOTES:

1. ALL DIMENSIONS ARE IN MILLIMETERS UNLESS OTHERWISE SPECIFIED.
2. LEVELS ARE IN METERS
3. DESIGN SERVICE LIFE OF 100 YEARS.
4. FLANGES OF TOP AND BOTTOM CHORDS TO BE SUPPLIED WITH IMPROVED THROUGH THICKNESS PROPERTIES Z25 ACCORDING TO EN10164.

REFERENCE DRAWINGS

1	93M-0407-SEN-6OL11-END-10118-B PAGE 01:17
2	
3	
4	
5	
6	
7	
8	
9	
10	
11	

6TH OF OCTOBER CITY RAIL TRANSIT MONORAIL &
NEW CAPITAL CITY RAIL TRANSIT MONORAIL

The Authority
Hill International
Authority Consultant

Main Contractor

Designer

CONTRACTOR/ CONSULTANT:

ENGINEERING HOUSE FOR CONSULTANCY

6 October Monorail
Engineering Unit
Valid For Construction

SCALE: AS SHOWN | SHOP DRAWING | DATE: 20.11.2024

DRAWING TITLE:
6TH OF OCTOBER MONORAIL
SHOP DRAWING FOR BRIDGE 6OL11-37
STEEL TRUSS (I).
LP31

REV	DATE	BY	DESCRIPTION	CHK	APD
A	20-11-24	M.SH	ISSUE FOR APPROVAL	A.SH	M.M

Project Code	Rubric	Initiator	Lot	Ref	Number	Revision
93M	0407	ACC	60L11	DWG	90106	A

-Drawing shall be updated according to the comments on the GA drawing.
-Approval is subjected to the approval of coordination package between multi-discipline.

REVIEWED WITH COMMENT
MONORAILS PROJECT

All holes are 22mm U.N.O Length & Area & Weight per piece

Mark	Profile	Grade	QTY	Length	Area	Weight
S1	ROD22	S235***	2990	175.0	0.01	0.5

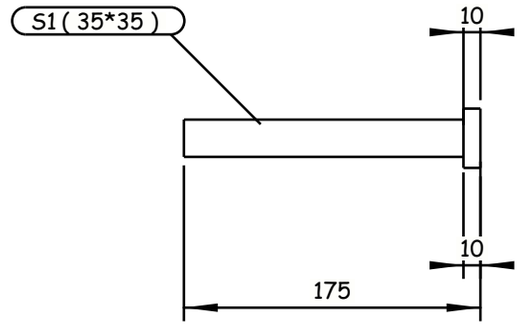

2990 REQUIRED AS DRAWN E.SH S1

6 October Monorail
Engineering Unit
Valid For Construction

Tekla structures

GENERAL NOTES:

1. ALL DIMENSIONS ARE IN MILLIMETERS UNLESS OTHERWISE SPECIFIED.
2. LEVELS ARE IN METERS
3. DESIGN SERVICE LIFE OF 100 YEARS.
4. FLANGES OF TOP AND BOTTOM CHORDS TO BE SUPPLIED WITH IMPROVED THROUGH THICKNESS PROPERTIES Z25 ACCORDING TO EN10164.

REFERENCE DRAWINGS

1	93M-0407-SEN-6OL11-END-10118-B PAGE 01:17
2	
3	
4	
5	
6	
7	
8	
9	
10	
11	

6TH OF OCTOBER CITY RAIL TRANSIT MONORAIL &
NEW CAPITAL CITY RAIL TRANSIT MONORAIL

The Authority
Hill International
Authority Consultant

ORASCOM CONSTRUCTION
Main Contractor

BOMBARDIER
SENER
SHAKER CONSULTANCY GROUP
Designer

CONTRACTOR:
CONSULTANT:
EHC
ENGINEERING HOUSE FOR CONSULTANCY

SCALE	SHOP DRAWING	DATE
AS SHOWN		20.11.2024

REV	DATE	BY	DESCRIPTION	CHK	APD
A	20-11-24	M.SH	ISSUE FOR APPROVAL	A.SH	M.M

DRAWING TITLE:
6TH OF OCTOBER MONORAIL
SHOP DRAWING FOR BRIDGE 6OL11-37
STEEL TRUSS (I).
S1

Project Code	Rubric	Initiator	Lot	Ref	Number	Revision
93M	0407	ACC	60L11	DWG	90107	A

-Drawing shall be updated according to the comments on the GA drawing.
-Approval is subjected to the approval of coordination package between multi-discipline.

REVIEWED WITH COMMENT
MONORAILS PROJECT

All holes are 22mm U.N.O Length & Area & Weight per piece

Mark	Profile	Grade	QTY	Length	Area	Weight
W1	PL40*720	S355J2N	4	906.3	1.40	199.4

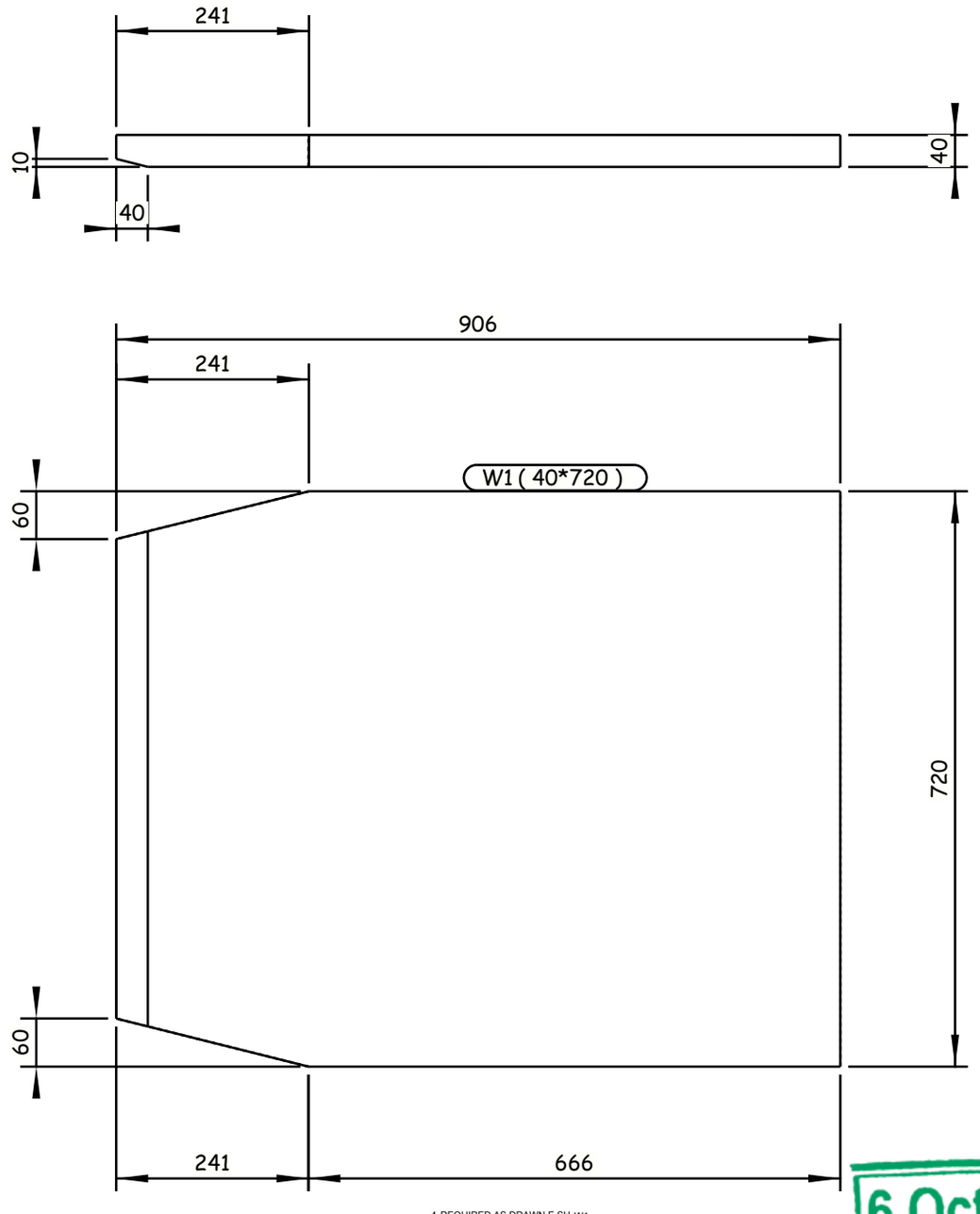

4 REQUIRED AS DRAWN E.SH W1

Tekla structures

GENERAL NOTES:

1. ALL DIMENSIONS ARE IN MILLIMETERS UNLESS OTHERWISE SPECIFIED.
2. LEVELS ARE IN METERS
3. DESIGN SERVICE LIFE OF 100 YEARS.
4. FLANGES OF TOP AND BOTTOM CHORDS TO BE SUPPLIED WITH IMPROVED THROUGH THICKNESS PROPERTIES Z25 ACCORDING TO EN10164.

REFERENCE DRAWINGS

1	93M-0407-SEN-6OL11-END-10118-B PAGE 01:17
2	
3	
4	
5	
6	
7	
8	
9	
10	
11	

6TH OF OCTOBER CITY RAIL TRANSIT MONORAIL &
NEW CAPITAL CITY RAIL TRANSIT MONORAIL

The Authority
Hill International
Authority Consultant

ORASCOM CONSTRUCTION
Main Contractor

BOMBARDIER
SENER
SHAKER CONSULTANCY GROUP
Designer

CONTRACTOR & CONSULTANT:
ENGINEERING HOUSE FOR CONSULTANCY

SCALE: AS SHOWN | CHK'D DRAWING | DATE: 20.11.2024

REV	DATE	BY	DESCRIPTION	CHK	APD
A	20-11-24	M.SH	ISSUE FOR APPROVAL	A.SH	M.M

6 October Monorail
Engineering Unit
Valid For Construction

DRAWING TITLE:
6TH OF OCTOBER MONORAIL
SHOP DRAWING FOR BRIDGE 6OL11-37
STEEL TRUSS (I).
W1

Project Code	Rubric	Initiator	Lot	Ref	Number	Revision
93M	0407	ACC	60L11	DWG	90108	A

-Drawing shall be updated according to the comments on the GA drawing.
-Approval is subjected to the approval of coordination package between multi-discipline.

REVIEWED WITH COMMENT
MONORAILS PROJECT

All holes are 22mm U.N.O Length & Area & Weight per piece

Mark	Profile	Grade	QTY	Length	Area	Weight
W2	PL40*720	S355J2N	4	906.1	1.40	199.4

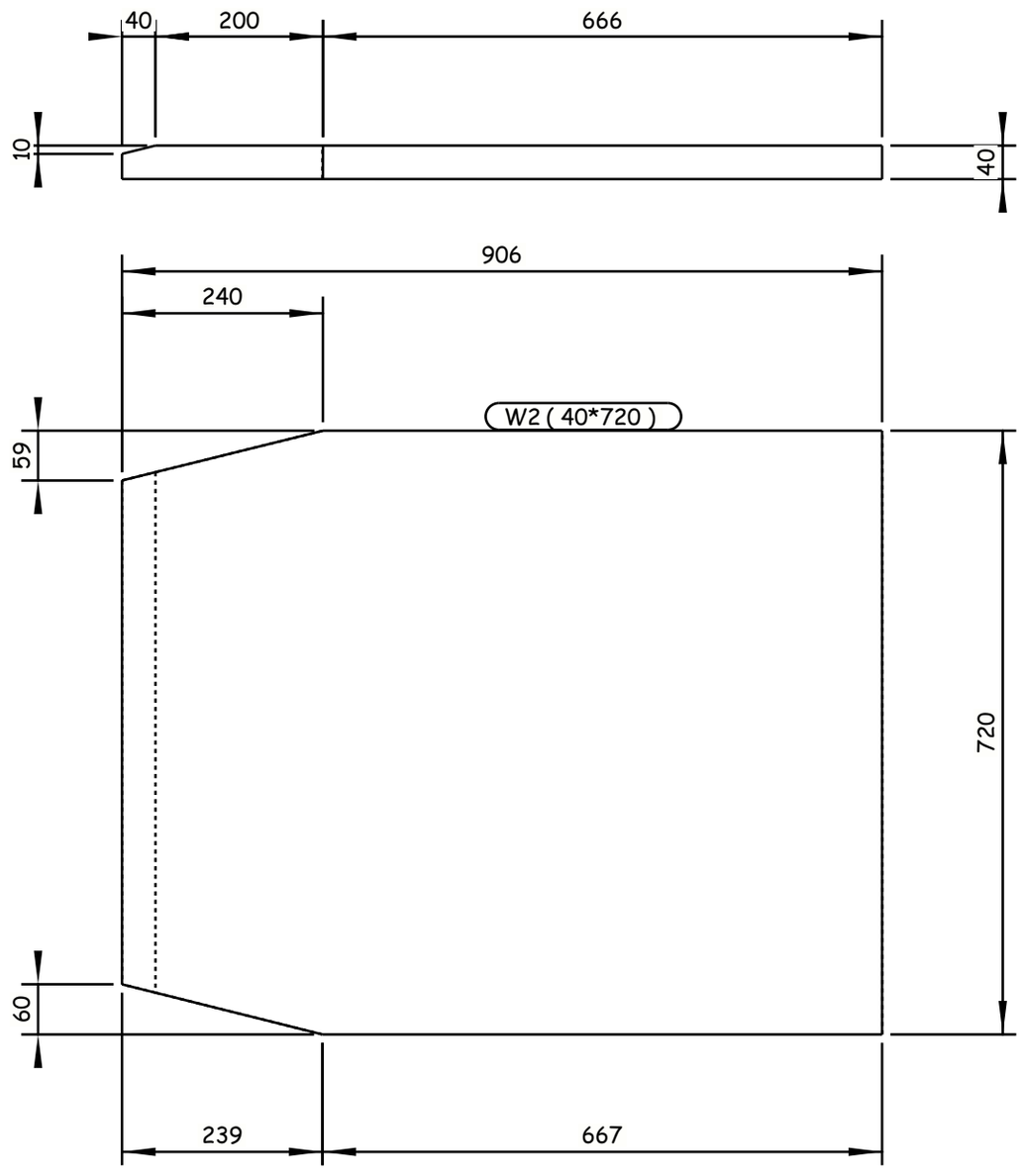

4 REQUIRED AS DRAWN E.SH W2

Tekla structures

GENERAL NOTES:

1. ALL DIMENSIONS ARE IN MILLIMETERS UNLESS OTHERWISE SPECIFIED.
2. LEVELS ARE IN METERS
3. DESIGN SERVICE LIFE OF 100 YEARS.
4. FLANGES OF TOP AND BOTTOM CHORDS TO BE SUPPLIED WITH IMPROVED THROUGH THICKNESS PROPERTIES Z25 ACCORDING TO EN10164.

REFERENCE DRAWINGS

1	93M-0407-SEN-6OL11-END-10118-B PAGE 01:17
2	
3	
4	
5	
6	
7	
8	
9	
10	
11	

6TH OF OCTOBER CITY RAIL TRANSIT MONORAIL &
NEW CAPITAL CITY RAIL TRANSIT MONORAIL

The Authority | Hill International Authority Consultant | Main Contractor | Designer

CONTRACTOR CONSULTANT : ENGINEERING HOUSE FOR CONSULTANCY

6 October Monorail Engineering Unit Valid For Construction

SCALE	SHOP DRAWING	DATE
AS SHOWN		20.11.2024

REV	DATE	BY	DESCRIPTION	CHK	APD
A	20-11-24	M.SH	ISSUE FOR APPROVAL	A.SH	M.M

DRAWING TITLE:
6TH OF OCTOBER MONORAIL
SHOP DRAWING FOR BRIDGE 6OL11-37
STEEL TRUSS (I).
W2

Project Code	Rubric	Initiator	Lot	Ref	Number	Revision
93M	0407	ACC	60L11	DWG	90109	A

-Drawing shall be updated according to the comments on the GA drawing.
-Approval is subjected to the approval of coordination package between multi-discipline.

REVIEWED WITH COMMENT
MONORAILS PROJECT

All holes are 22mm U.N.O Length & Area & Weight per piece

Mark	Profile	Grade	QTY	Length	Area	Weight
W3	PL15*223.9	S355J2N	4	540.0	0.26	14.1

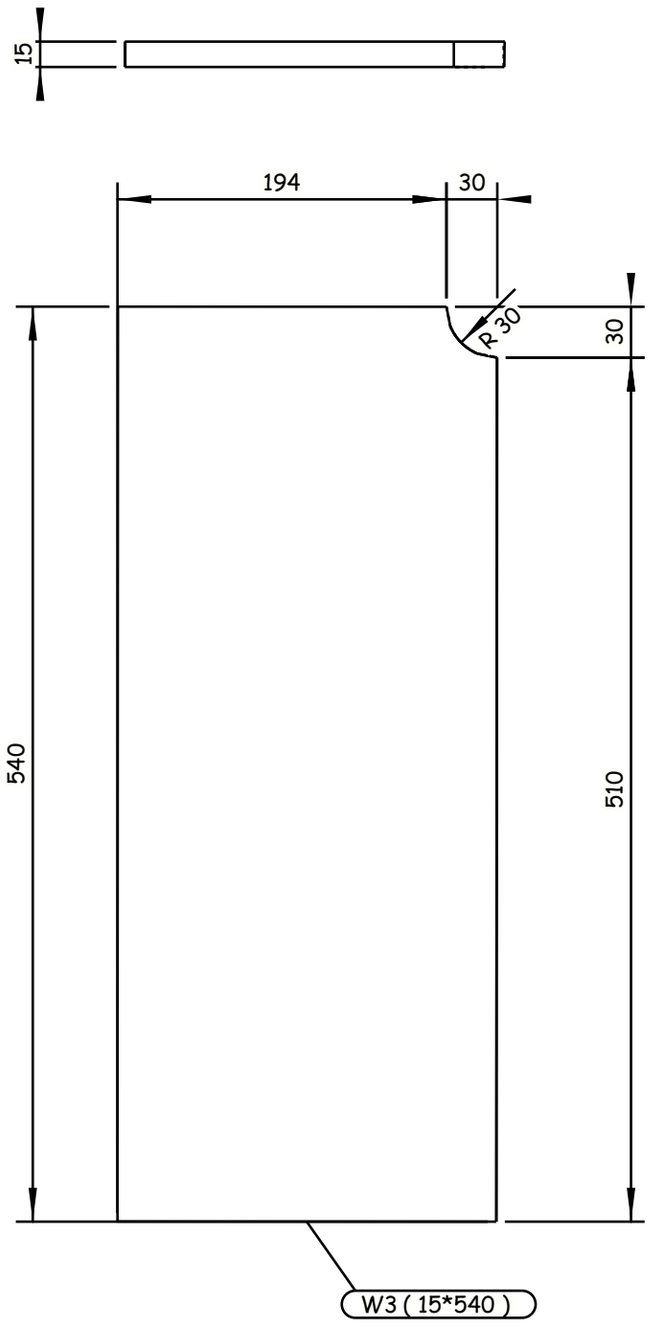

4 REQUIRED AS DRAWN E.SH W3

Tekla structures

GENERAL NOTES:

1. ALL DIMENSIONS ARE IN MILLIMETERS UNLESS OTHERWISE SPECIFIED.
2. LEVELS ARE IN METERS
3. DESIGN SERVICE LIFE OF 100 YEARS.
4. FLANGES OF TOP AND BOTTOM CHORDS TO BE SUPPLIED WITH IMPROVED THROUGH THICKNESS PROPERTIES Z25 ACCORDING TO EN10164.

REFERENCE DRAWINGS

1	93M-0407-SEN-6OL11-END-10118-B PAGE 01:17
2	
3	
4	
5	
6	
7	
8	
9	
10	
11	

6TH OF OCTOBER CITY RAIL TRANSIT MONORAIL &
NEW CAPITAL CITY RAIL TRANSIT MONORAIL

The Authority | Hill International Authority Consultant | Main Contractor | Designer

CONTRACTOR / CONSULTANT:

ENGINEERING HOUSE FOR CONSULTANCY

6 October Monorail
Engineering Unit
Valid For Construction

SCALE: AS SHOWN | SHD DRAWING | DATE: 20.11.2024

DRAWING TITLE:
6TH OF OCTOBER MONORAIL
SHOP DRAWING FOR BRIDGE 6OL11-37
STEEL TRUSS (I).
W3

REV	DATE	BY	DESCRIPTION	CHK	APD
A	20-11-24	M.SH	ISSUE FOR APPROVAL	A.SH	M.M

Project Code	Rubric	Initiator	Lot	Ref	Number	Revision
93M	0407	ACC	60L11	DWG	90110	A

-Drawing shall be updated according to the comments on the GA drawing.
-Approval is subjected to the approval of coordination package between multi-discipline.

REVIEWED WITH COMMENT
MONORAILS PROJECT

All holes are 22mm U.N.O Length & Area & Weight per piece

Mark	Profile	Grade	QTY	Length	Area	Weight
W4	PL25*700	S355J2N	4	1457.0	2.11	196.2

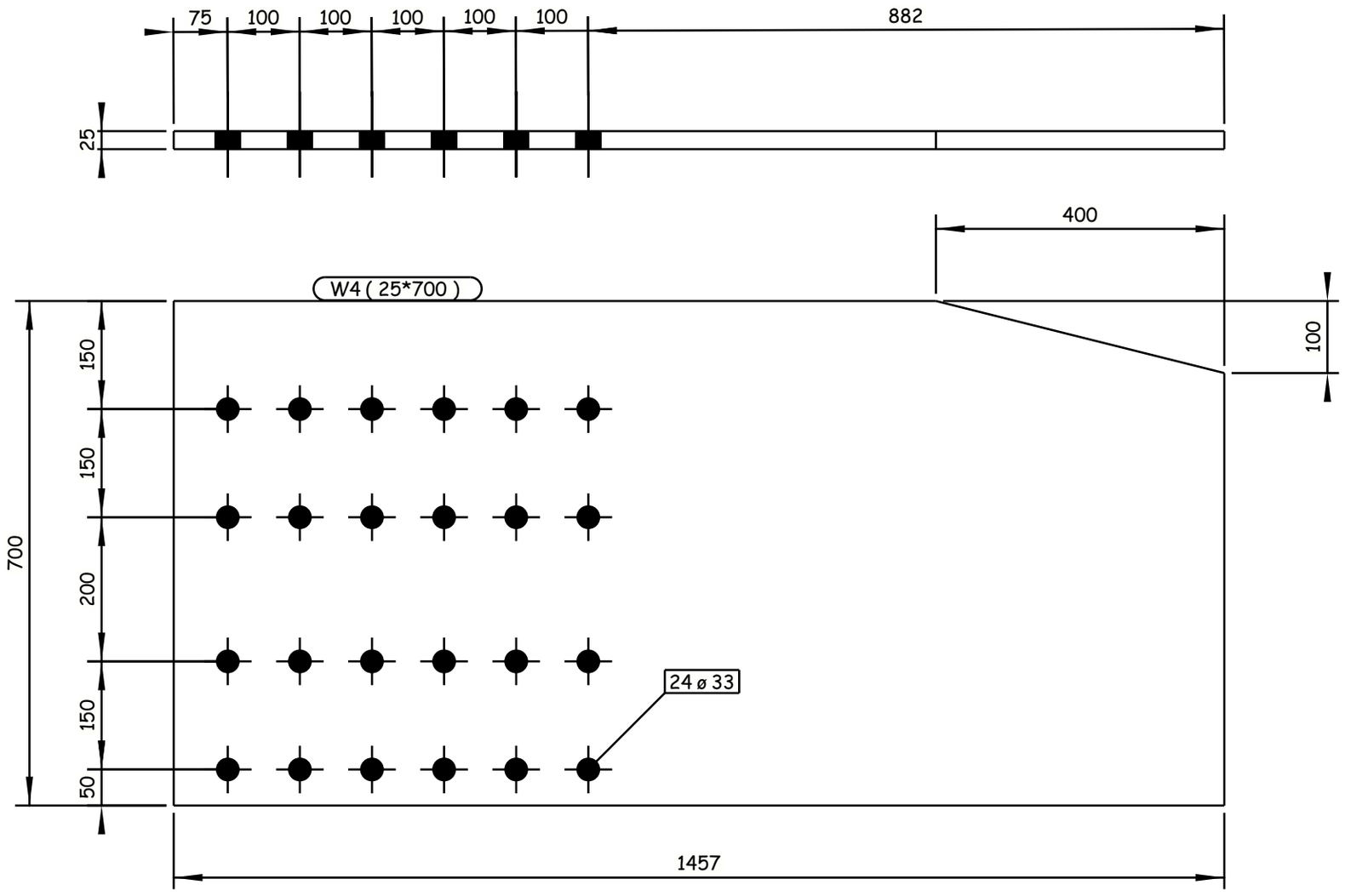

4 REQUIRED AS DRAWN E.SH W4

GENERAL NOTES:

1. ALL DIMENSIONS ARE IN MILLIMETERS UNLESS OTHERWISE SPECIFIED.
2. LEVELS ARE IN METERS
3. DESIGN SERVICE LIFE OF 100 YEARS.
4. FLANGES OF TOP AND BOTTOM CHORDS TO BE SUPPLIED WITH IMPROVED THROUGH THICKNESS PROPERTIES Z25 ACCORDING TO EN10164.

REFERENCE DRAWINGS

1	93M-0407-SEN-6OL11-END-10118-B PAGE 01:17
2	
3	
4	
5	
6	
7	
8	
9	
10	
11	

6TH OF OCTOBER CITY RAIL TRANSIT MONORAIL &
NEW CAPITAL CITY RAIL TRANSIT MONORAIL

The Authority
Authority Consultant
Main Contractor
Designer

CONTRACTOR & CONSULTANT:
ENGINEERING HOUSE FOR CONSULTANCY

6 October Monorail
Engineering Unit
Valid For Construction

SCALE	SHOP DRAWING	DATE
AS SHOWN		20.11.2024

REV	DATE	BY	DESCRIPTION	CHK	APD
A	20-11-24	M.SH	ISSUE FOR APPROVAL	A.SH	M.M

DRAWING TITLE:
6TH OF OCTOBER MONORAIL
SHOP DRAWING FOR BRIDGE 6OL11-37
STEEL TRUSS (I).
W4

Project Code	Rubric	Initiator	Lot	Ref	Number	Revision
93M	0407	ACC	60L11	DWG	90111	A

Tekla structures

-Drawing shall be updated according to the comments on the GA drawing.
-Approval is subjected to the approval of coordination package between multi-discipline.

REVIEWED WITH COMMENT
MONORAILS PROJECT

All holes are 22mm U.N.O Length & Area & Weight per piece

Mark	Profile	Grade	QTY	Length	Area	Weight
W5	PL25*700	S355J2N	2	1483.4	2.13	196.7

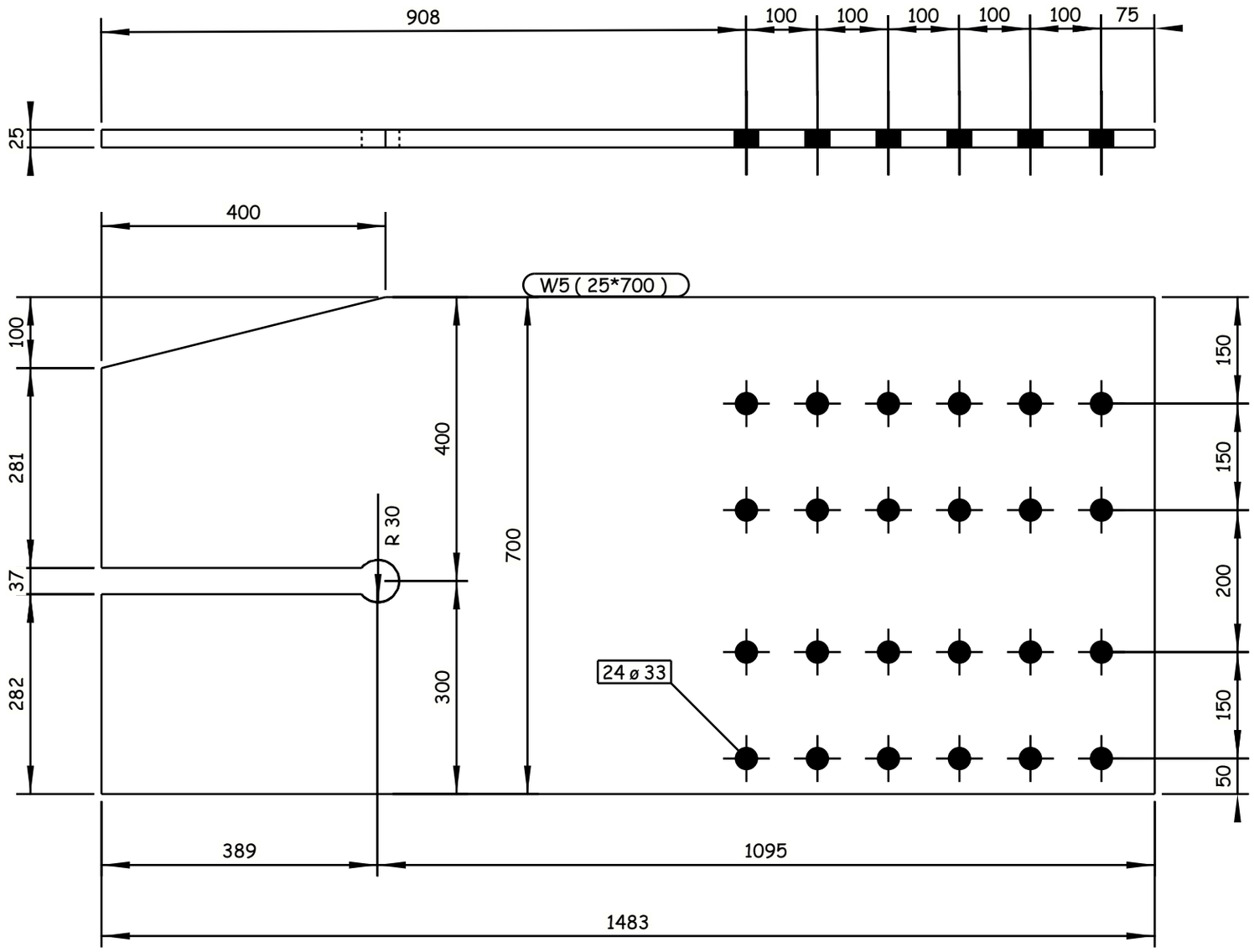

2 REQUIRED AS DRAWN E.SH W5

6 October Monorail
Engineering Unit
Valid For Construction

GENERAL NOTES:

1. ALL DIMENSIONS ARE IN MILLIMETERS UNLESS OTHERWISE SPECIFIED.
2. LEVELS ARE IN METERS
3. DESIGN SERVICE LIFE OF 100 YEARS.
4. FLANGES OF TOP AND BOTTOM CHORDS TO BE SUPPLIED WITH IMPROVED THROUGH THICKNESS PROPERTIES Z25 ACCORDING TO EN10164.

REFERENCE DRAWINGS

1	93M-0407-SEN-6OL11-END-10118-B PAGE 01:17
2	
3	
4	
5	
6	
7	
8	
9	
10	
11	

6TH OF OCTOBER CITY RAIL TRANSIT MONORAIL &
NEW CAPITAL CITY RAIL TRANSIT MONORAIL

The Authority — Hill International Authority Consultant — Main Contractor — Designer

CONTRACTOR / CONSULTANT:
ENGINEERING HOUSE FOR CONSULTANCY

SCALE: AS SHOWN | CHD DRAWING | DATE: 20.11.2024

DRAWING TITLE:
6TH OF OCTOBER MONORAIL
SHOP DRAWING FOR BRIDGE 6OL11-37
STEEL TRUSS (I).
W5

REV	DATE	BY	DESCRIPTION	CHK	APD
A	20-11-24	M.SH	ISSUE FOR APPROVAL	A.SH	M.M

Project Code	Rubric	Initiator	Lot	Ref	Number	Revision
93M	0407	ACC	60L11	DWG	90112	A

Tekla structures

-Drawing shall be updated according to the comments on the GA drawing.
-Approval is subjected to the approval of coordination package between multi-discipline.

REVIEWED WITH COMMENT
MONORAILS PROJECT

All holes are 22mm U.N.O Length & Area & Weight per piece						
W6	PL40*820	S355J2N	4	1153.6	2.02	292.3
Mark	Profile	Grade	QTY	Length	Area	Weight

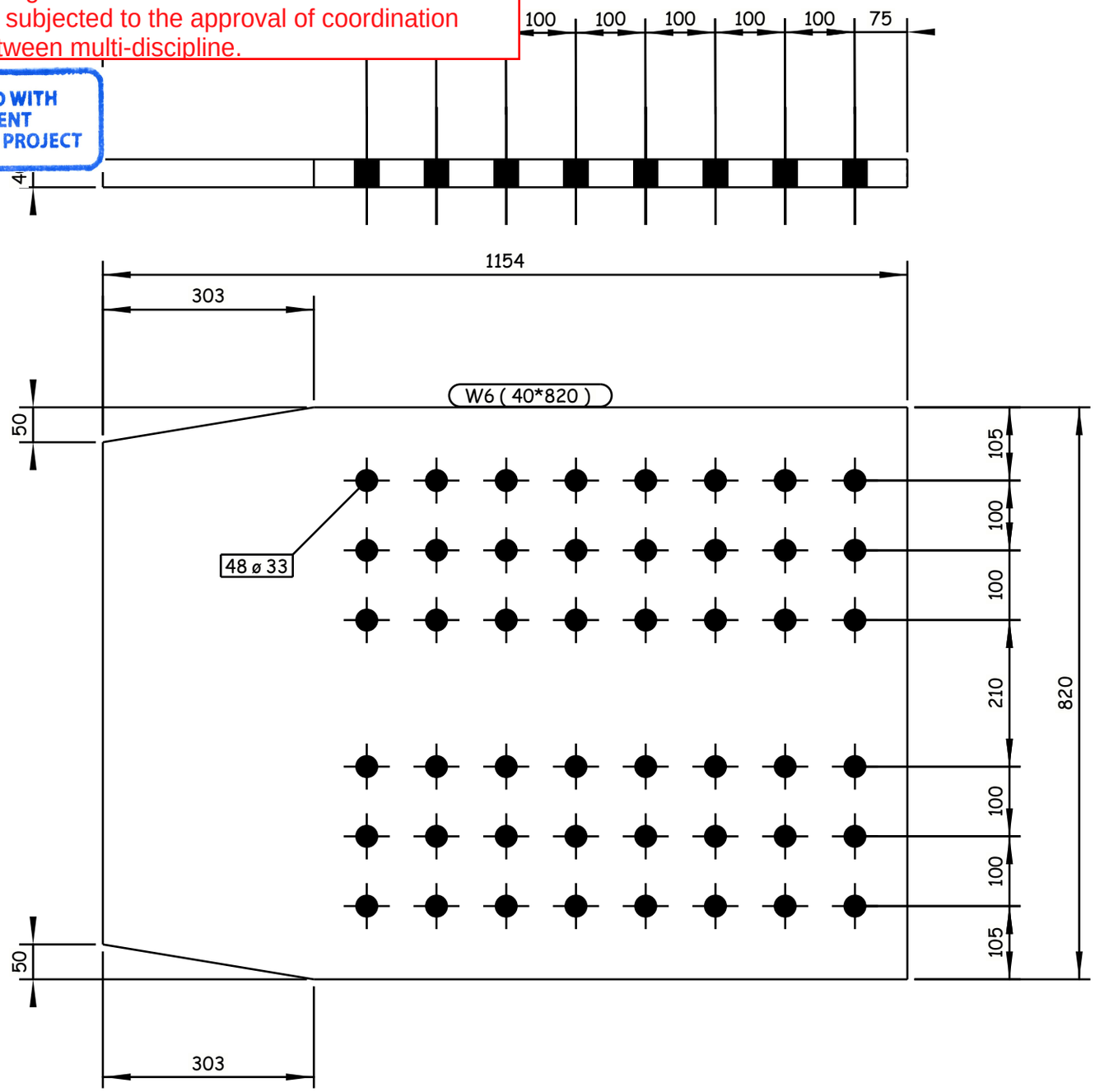

4 REQUIRED AS DRAWN E.SH W6

Tekla structures

GENERAL NOTES:

1. ALL DIMENSIONS ARE IN MILLIMETERS UNLESS OTHERWISE SPECIFIED.
2. LEVELS ARE IN METERS
3. DESIGN SERVICE LIFE OF 100 YEARS.
4. FLANGES OF TOP AND BOTTOM CHORDS TO BE SUPPLIED WITH IMPROVED THROUGH THICKNESS PROPERTIES Z25 ACCORDING TO EN10164.

REFERENCE DRAWINGS

1	93M-0407-SEN-6OL11-END-10118-B PAGE 01:17
2	
3	
4	
5	
6	
7	
8	
9	
10	
11	

6TH OF OCTOBER CITY RAIL TRANSIT MONORAIL &
NEW CAPITAL CITY RAIL TRANSIT MONORAIL

The Authority
Hill International
Authority Consultant

ORASCOM CONSTRUCTION
BOMBARDIER
Main Contractor

SENER
SHAKER CONSULTANCY GROUP
Designer

CONTRACTOR / CONSULTANT:
ENGINEERING HOUSE FOR CONSULTANCY

6 October Monorail
Engineering Unit
Valid For Construction

SCALE	CHD DRAWING	DATE
AS SHOWN		20.11.2024

REV	DATE	BY	DESCRIPTION	CHK	APD
A	20-11-24	M.SH	ISSUE FOR APPROVAL	A.SH	M.M

DRAWING TITLE:
6TH OF OCTOBER MONORAIL
SHOP DRAWING FOR BRIDGE 6OL11-37
STEEL TRUSS (I).
W6

Project Code	Rubric	Initiator	Lot	Ref	Number	Revision
93M	0407	ACC	60L11	DWG	90113	A

-Drawing shall be updated according to the comments on the GA drawing.
-Approval is subjected to the approval of coordination package between multi-discipline.

REVIEWED WITH COMMENT
MONORAILS PROJECT

All holes are 22mm U.N.O Length & Area & Weight per piece

Mark	Profile	Grade	QTY	Length	Area	Weight
W7	PL40*820	S355J2N	4	1151.0	2.01	291.6

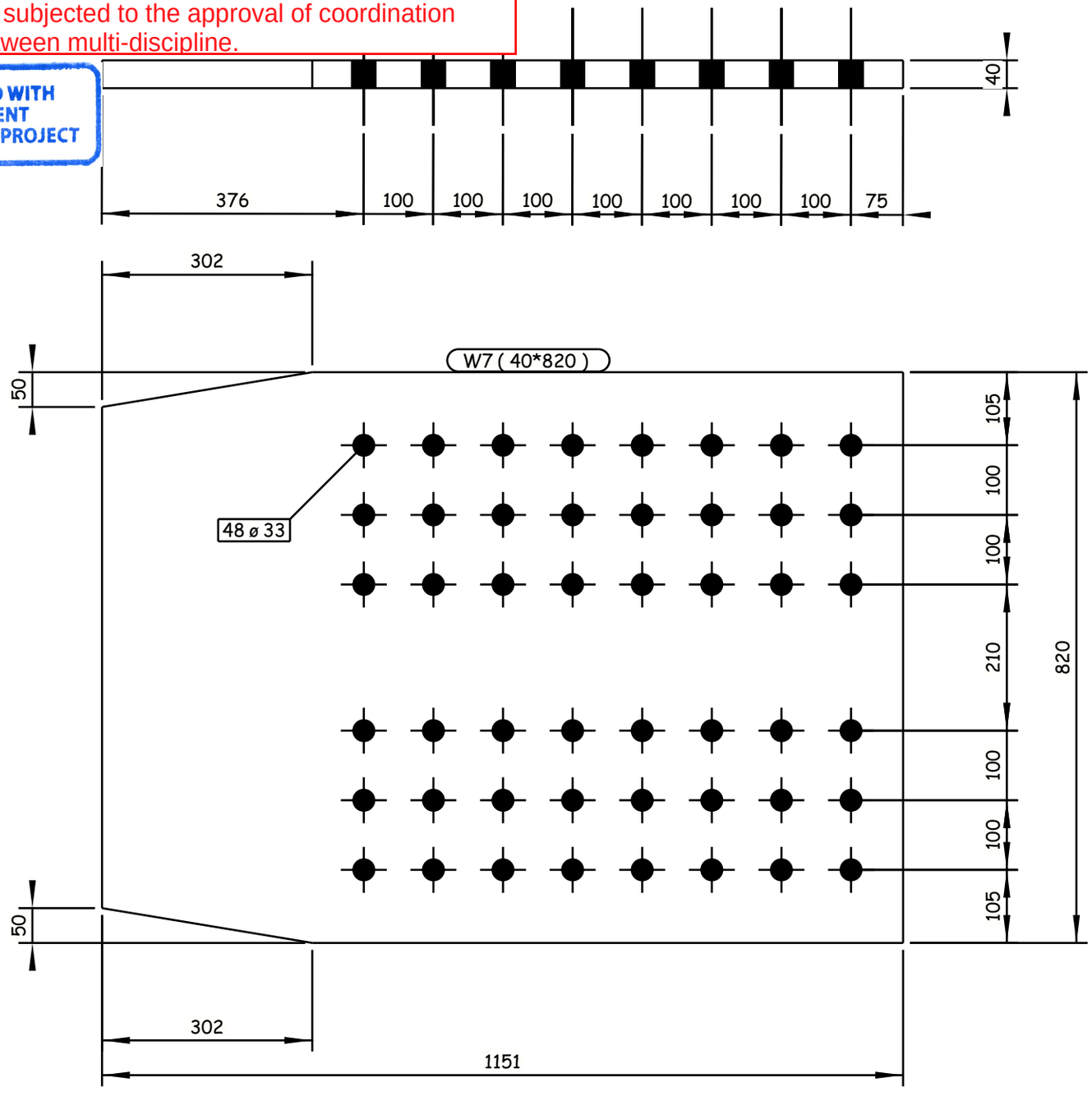

4 REQUIRED AS DRAWN E.SH W7

GENERAL NOTES:

1. ALL DIMENSIONS ARE IN MILLIMETERS UNLESS OTHERWISE SPECIFIED.
2. LEVELS ARE IN METERS
3. DESIGN SERVICE LIFE OF 100 YEARS.
4. FLANGES OF TOP AND BOTTOM CHORDS TO BE SUPPLIED WITH IMPROVED THROUGH THICKNESS PROPERTIES Z25 ACCORDING TO EN10164.

REFERENCE DRAWINGS

1	93M-0407-SEN-6OL11-END-10118-B PAGE 01:17
2	
3	
4	
5	
6	
7	
8	
9	
10	
11	

6TH OF OCTOBER CITY RAIL TRANSIT MONORAIL &
NEW CAPITAL CITY RAIL TRANSIT MONORAIL

The Authority — Authority Consultant
Hill International
Main Contractor
Designer

CONTRACTOR / CONSULTANT:
ENGINEERING HOUSE FOR CONSULTANCY

SCALE: AS SHOWN | SHOP DRAWING | DATE: 20.11.2024

REV	DATE	BY	DESCRIPTION	CHK	APD
A	20-11-24	M.SH	ISSUE FOR APPROVAL	A.SH	M.M

6 October Monorail
Engineering Unit
Valid For Construction

DRAWING TITLE:
6TH OF OCTOBER MONORAIL
SHOP DRAWING FOR BRIDGE 6OL11-37
STEEL TRUSS (I).
W7

Project Code	Rubric	Initiator	Lot	Ref	Number	Revision
93M	0407	ACC	60L11	DWG	90114	A

Tekla structures

-Drawing shall be updated according to the comments on the GA drawing.
-Approval is subjected to the approval of coordination package between multi-discipline.

REVIEWED WITH COMMENT
MONORAILS PROJECT

All holes are 22mm U.N.O Length & Area & Weight per piece						
W8	PL40*820	S355J2N	4	1152.3	2.01	292.0
Mark	Profile	Grade	QTY	Length	Area	Weight

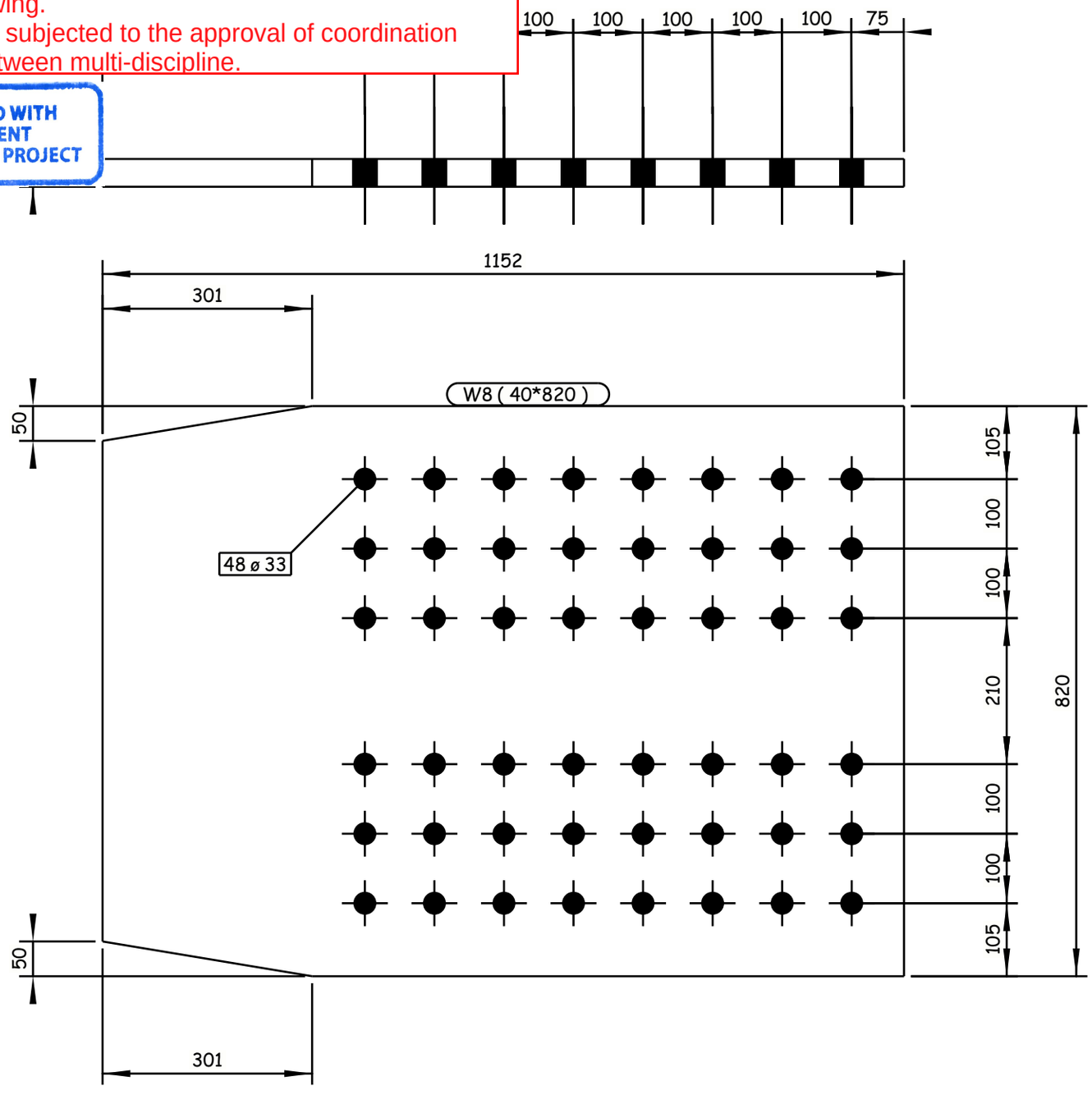

4 REQUIRED AS DRAWN E.SH W8

6 October Monorail
Engineering Unit
Valid For Construction

GENERAL NOTES:

1. ALL DIMENSIONS ARE IN MILLIMETERS UNLESS OTHERWISE SPECIFIED.
2. LEVELS ARE IN METERS
3. DESIGN SERVICE LIFE OF 100 YEARS.
4. FLANGES OF TOP AND BOTTOM CHORDS TO BE SUPPLIED WITH IMPROVED THROUGH THICKNESS PROPERTIES Z25 ACCORDING TO EN10164.

REFERENCE DRAWINGS

1	93M-0407-SEN-6OL11-END-10118-B PAGE 01:17
2	
3	
4	
5	
6	
7	
8	
9	
10	
11	

6TH OF OCTOBER CITY RAIL TRANSIT MONORAIL &
NEW CAPITAL CITY RAIL TRANSIT MONORAIL

The Authority | Hill International Authority Consultant | Main Contractor | Designer

CONTRACTOR/ CONSULTANT:
ENGINEERING HOUSE FOR CONSULTANCY

SCALE: AS SHOWN | SHOP DRAWING | DATE: 20.11.2024

DRAWING TITLE:
6TH OF OCTOBER MONORAIL
SHOP DRAWING FOR BRIDGE 6OL11-37
STEEL TRUSS (I).
W8

REV	DATE	BY	DESCRIPTION	CHK	APD
A	20-11-24	M.SH	ISSUE FOR APPROVAL	A.SH	M.M

Project Code	Rubric	Initiator	Lot	Ref	Number	Revision
93M	0407	ACC	60L11	DWG	90115	A

Tekla structures

-Drawing shall be updated according to the comments on the GA drawing.
-Approval is subjected to the approval of coordination package between multi-discipline.

REVIEWED WITH COMMENT
MONORAILS PROJECT

All holes are 22mm U.N.O Length & Area & Weight per piece

Mark	Profile	Grade	QTY	Length	Area	Weight
W9	PL40*820	S355J2N	4	1152.0	2.01	291.9

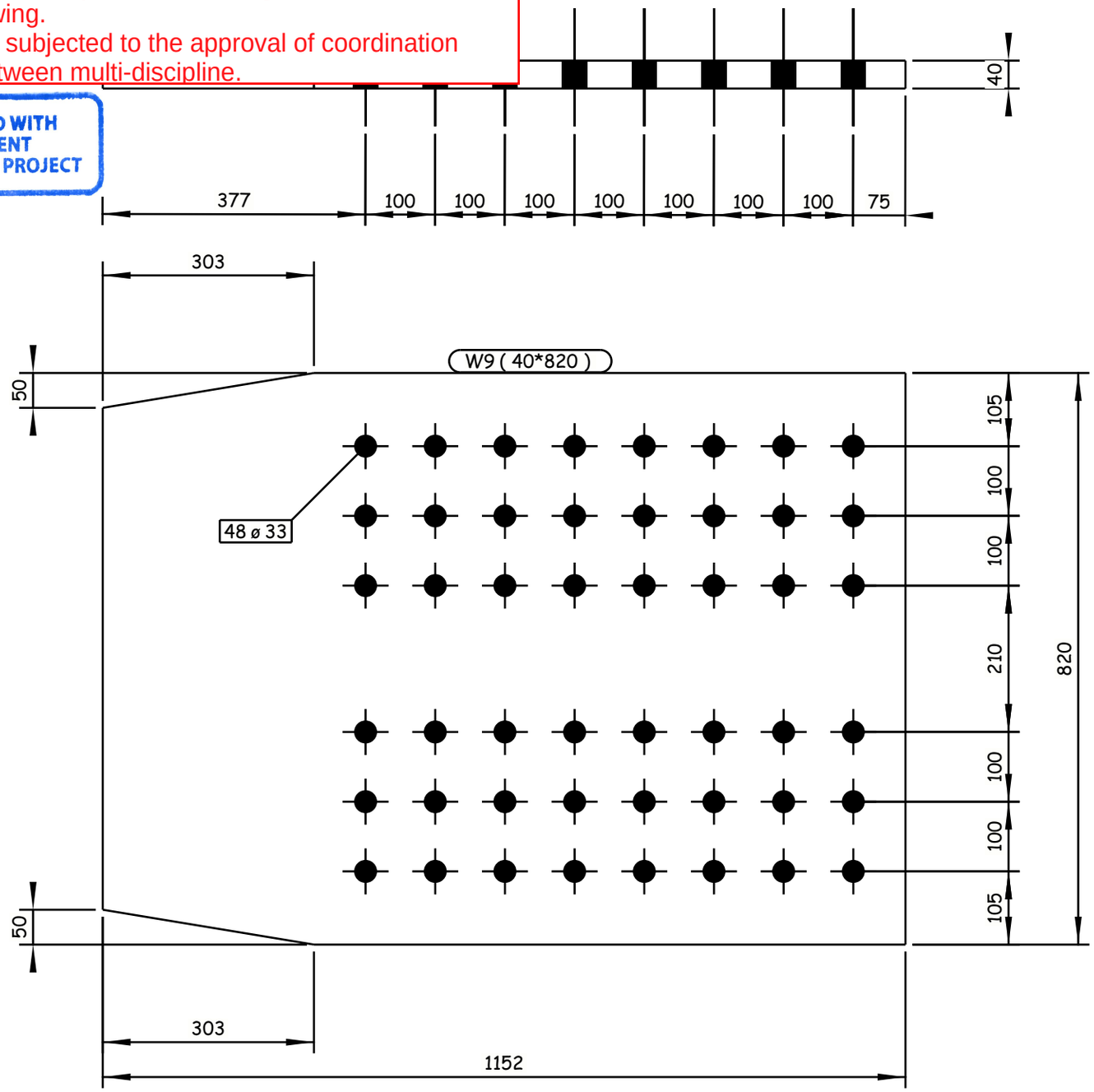

4 REQUIRED AS DRAWN E.SH W9

GENERAL NOTES:

1. ALL DIMENSIONS ARE IN MILLIMETERS UNLESS OTHERWISE SPECIFIED.
2. LEVELS ARE IN METERS
3. DESIGN SERVICE LIFE OF 100 YEARS.
4. FLANGES OF TOP AND BOTTOM CHORDS TO BE SUPPLIED WITH IMPROVED THROUGH THICKNESS PROPERTIES Z25 ACCORDING TO EN10164.

REFERENCE DRAWINGS

1	93M-0407-SEN-6OL11-END-10118-B PAGE 01:17
2	
3	
4	
5	
6	
7	
8	
9	
10	
11	

6TH OF OCTOBER CITY RAIL TRANSIT MONORAIL &
NEW CAPITAL CITY RAIL TRANSIT MONORAIL

The Authority
Hill International
Authority Consultant

ORASCOM CONSTRUCTION
BOMBARDIER
Main Contractor

SENER
SHAKER CONSULTANCY GROUP
Designer

CONTRACTOR & CONSULTANT :
ENGINEERING HOUSE FOR CONSULTANCY

SCALE: AS SHOWN | CHD DRWING | DATE: 20.11.2024

REV	DATE	BY	DESCRIPTION	CHK	APD
A	20-11-24	M.SH	ISSUE FOR APPROVAL	A.SH	M.M

6 October Monorail
Engineering Unit
Valid For Construction

DRAWING TITLE:
6TH OF OCTOBER MONORAIL
SHOP DRAWING FOR BRIDGE 6OL11-37
STEEL TRUSS (I).
W9

Project Code	Rubric	Initiator	Lot	Ref	Number	Revision
93M	0407	ACC	60L11	DWG	90116	A

Tekla structures

All holes are 22mm U.N.O Length & Area & Weight per piece						
W10	PL35*1209.9	S355J2N	4	2052.3	4.18	543.7
Mark	Profile	Grade	QTY	Length	Area	Weight

-Drawing shall be updated according to the comments on the GA drawing.
-Approval is subjected to the approval of coordination package between multi-discipline.

REVIEWED WITH COMMENT
MONORAILS PROJECT

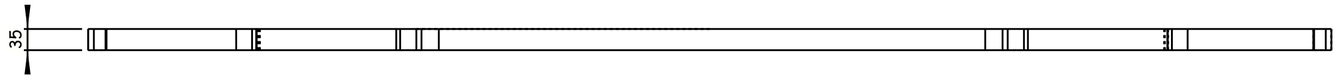

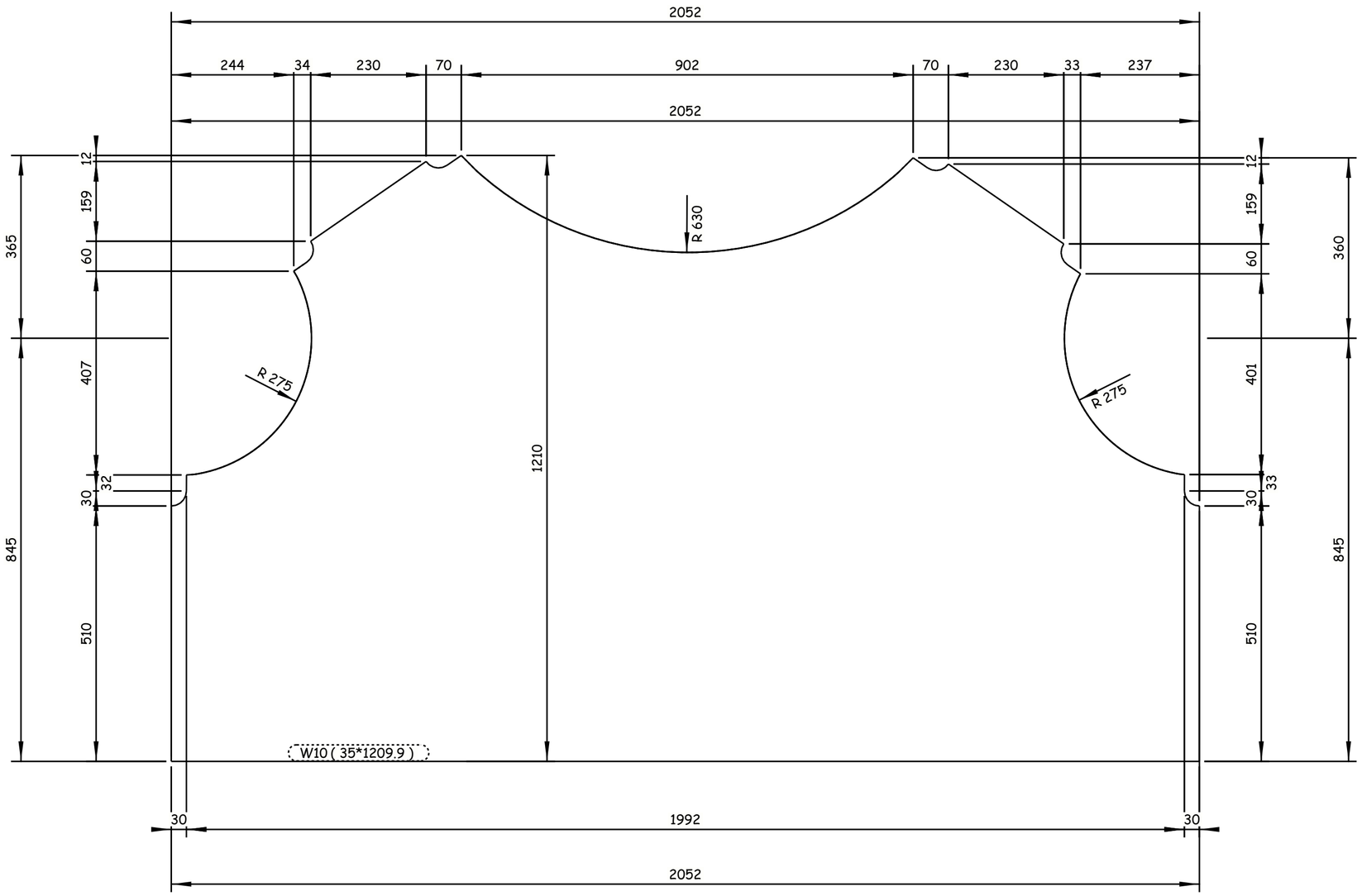

4 REQUIRED AS DRAWN E.SH W10

GENERAL NOTES:

1. ALL DIMENSIONS ARE IN MILLIMETERS UNLESS OTHERWISE SPECIFIED.
2. LEVELS ARE IN METERS
3. DESIGN SERVICE LIFE OF 100 YEARS.
4. FLANGES OF TOP AND BOTTOM CHORDS TO BE SUPPLIED WITH IMPROVED THROUGH THICKNESS PROPERTIES Z25 ACCORDING TO EN10164.

REFERENCE DRAWINGS

1	93M-0407-SEN-6OL11-END-10118-B PAGE 01:17
2	
3	
4	
5	
6	
7	
8	
9	
10	
11	

6TH OF OCTOBER CITY RAIL TRANSIT MONORAIL &
NEW CAPITAL CITY RAIL TRANSIT MONORAIL

The Authority — Hill International — Authority Consultant
ORASCOM CONSTRUCTION — BOMBARDIER — Main Contractor
SENER — SHAKER CONSULTANCY GROUP — Designer

CONTRACTOR
CONSULTANT
ENGINEERING HOUSE FOR CONSULTANCY

6 October Monorail
Engineering Unit
Valid For Construction

SCALE		SHOP DRAWING		DATE
AS SHOWN				20.11.2024

REV	DATE	BY	DESCRIPTION	CHK	APD
A	20-11-24	M.SH	ISSUE FOR APPROVAL	A.SH	M.M

DRAWING TITLE:
6TH OF OCTOBER MONORAIL
SHOP DRAWING FOR BRIDGE 6OL11-37
STEEL TRUSS (I).
W10

Project Code	Rubric	Initiator	Lot	Ref	Number	Revision
93M	0407	ACC	60L11	DWG	90117	A

Tekla structures

-Drawing shall be updated according to the comments on the GA drawing.
-Approval is subjected to the approval of coordination package between multi-discipline.

REVIEWED WITH COMMENT MONORAILS PROJECT

All holes are 22mm U.N.O Length & Area & Weight per piece						
W11	PL35*1209.8	S355J2N	4	2052.3	4.18	543.6
Mark	Profile	Grade	QTY	Length	Area	Weight

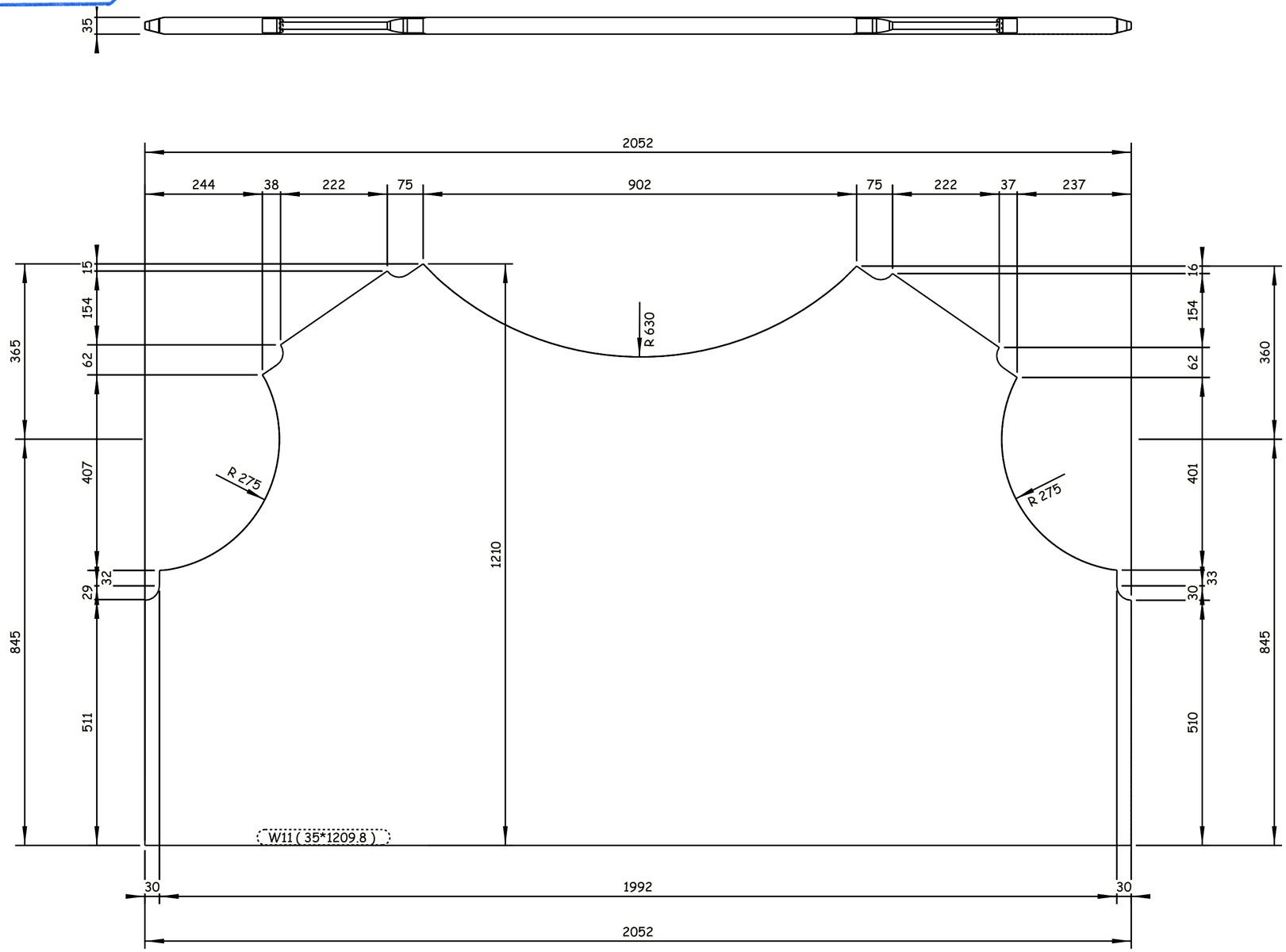

4 REQUIRED AS DRAWN E.SH W11

GENERAL NOTES:

1. ALL DIMENSIONS ARE IN MILLIMETERS UNLESS OTHERWISE SPECIFIED.
2. LEVELS ARE IN METERS
3. DESIGN SERVICE LIFE OF 100 YEARS.
4. FLANGES OF TOP AND BOTTOM CHORDS TO BE SUPPLIED WITH IMPROVED THROUGH THICKNESS PROPERTIES Z25 ACCORDING TO EN10164.

REFERENCE DRAWINGS

1	93M-0407-SEN-6OL11-END-10118-B PAGE 01:17
2	
3	
4	
5	
6	
7	
8	
9	
10	
11	

6TH OF OCTOBER CITY RAIL TRANSIT MONORAIL & NEW CAPITAL CITY RAIL TRANSIT MONORAIL

وزارة النقل MINISTRY OF TRANSPORT
The Authority
Hill International
Authority Consultant

ORASCOM CONSTRUCTION
BOMBARDIER
Main Contractor

SENER
SHAKER CONSULTANCY GROUP
Designer

CONTRACTOR CONSULTANT:
ENGINEERING HOUSE FOR CONSULTANCY

6 October Monorail Engineering Unit Valid For Construction

SCALE: AS SHOWN			SHOP DRAWING	DATE: 20.11.2024	
A	20-11-24	M.SH	ISSUE FOR APPROVAL	A.SH	M.M
REV	DATE	BY	DESCRIPTION	CHK	APD

DRAWING TITLE:
6TH OF OCTOBER MONORAIL
SHOP DRAWING FOR BRIDGE 6OL11-37
STEEL TRUSS (I).
W11

Project Code	Rubric	Initiator	Lot	Ref	Number	Revision
93M	0407	ACC	6OL11	DWG	90118	A

Tekla structures

-Drawing shall be updated according to the comments on the GA drawing.
-Approval is subjected to the approval of coordination package between multi-discipline.

REVIEWED WITH COMMENT
MONORAILS PROJECT

All holes are 22mm U.N.O Length & Area & Weight per piece						
W12	PL35*1208.6	S355J2N	4	2052.3	4.18	544.0
Mark	Profile	Grade	QTY	Length	Area	Weight

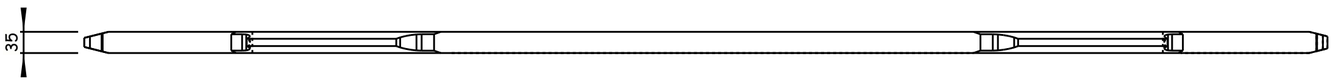

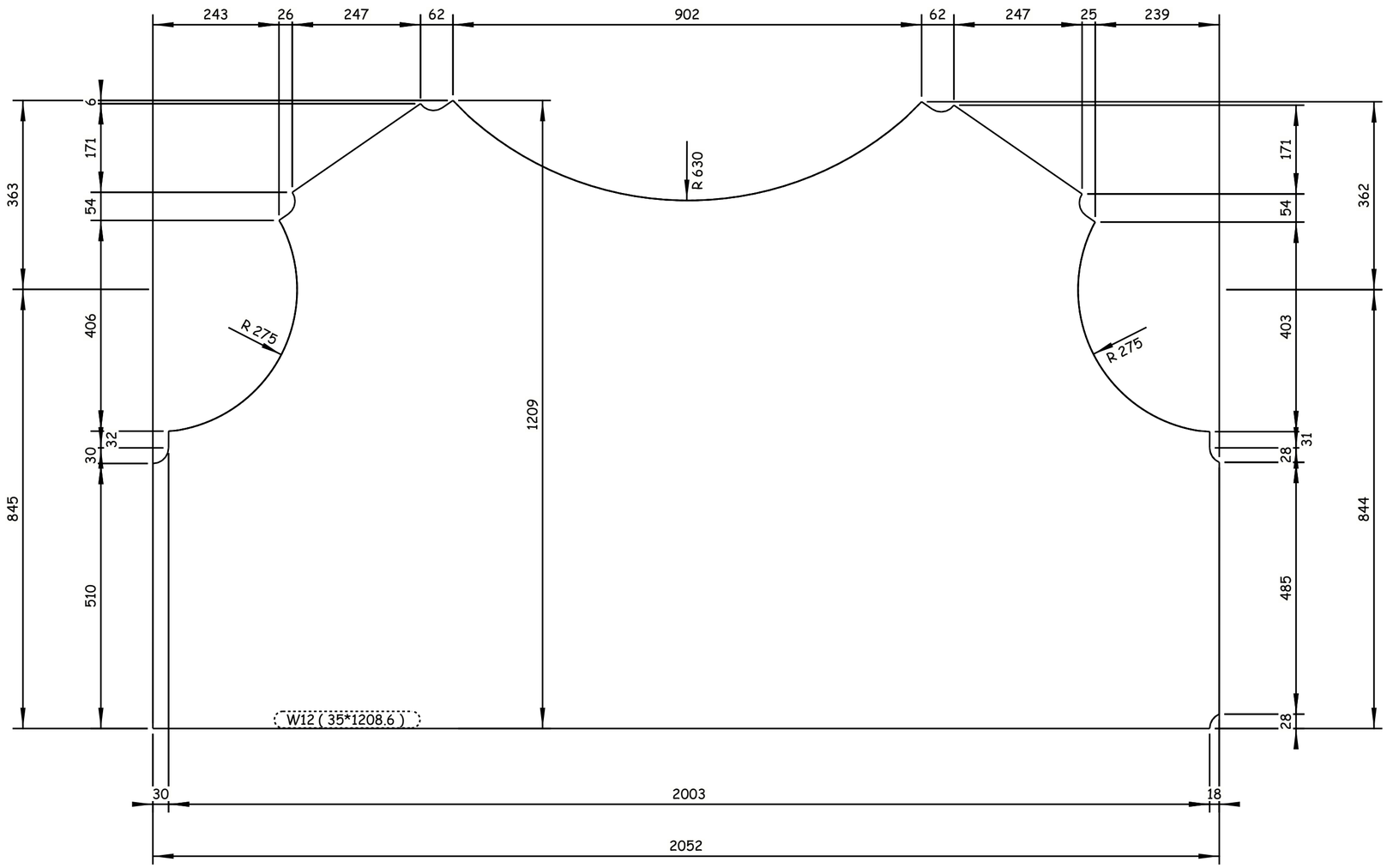

4 REQUIRED AS DRAWN E.SH W12

GENERAL NOTES:

1. ALL DIMENSIONS ARE IN MILLIMETERS UNLESS OTHERWISE SPECIFIED.
2. LEVELS ARE IN METERS
3. DESIGN SERVICE LIFE OF 100 YEARS.
4. FLANGES OF TOP AND BOTTOM CHORDS TO BE SUPPLIED WITH IMPROVED THROUGH THICKNESS PROPERTIES Z25 ACCORDING TO EN10164.

REFERENCE DRAWINGS

1	93M-0407-SEN-6OL11-END-10118-B PAGE 01:17
2	
3	
4	
5	
6	
7	
8	
9	
10	
11	

6TH OF OCTOBER CITY RAIL TRANSIT MONORAIL &
NEW CAPITAL CITY RAIL TRANSIT MONORAIL

The Authority — Hill International — Authority Consultant
Main Contractor
Designer

CONTRACTOR
CONSULTANT:
ENGINEERING HOUSE FOR CONSULTANCY

SCALE: AS SHOWN | SHOP DRAWING | DATE: 20.11.2024

REV	DATE	BY	DESCRIPTION	CHK	APD
A	20-11-24	M.SH	ISSUE FOR APPROVAL	A.SH	M.M

6 October Monorail
Engineering Unit
Valid For Construction

DRAWING TITLE:
6TH OF OCTOBER MONORAIL
SHOP DRAWING FOR BRIDGE 6OL11-37
STEEL TRUSS (I).
W12

Project Code	Rubric	Initiator	Lot	Ref	Number	Revision
9 3 M	0 4 0 7	A C C	6 0 L 1 1	D W G	90119	A

Tekla structures

All holes are 22mm U.N.O Length & Area & Weight per piece						
W13	PL35*1200.4	S355J2N	2	2052.2	4.15	539.8
Mark	Profile	Grade	QTY	Length	Area	Weight

-Drawing shall be updated according to the comments on the GA drawing.
-Approval is subjected to the approval of coordination package between multi-discipline.

REVIEWED WITH COMMENT
MONORAILS PROJECT

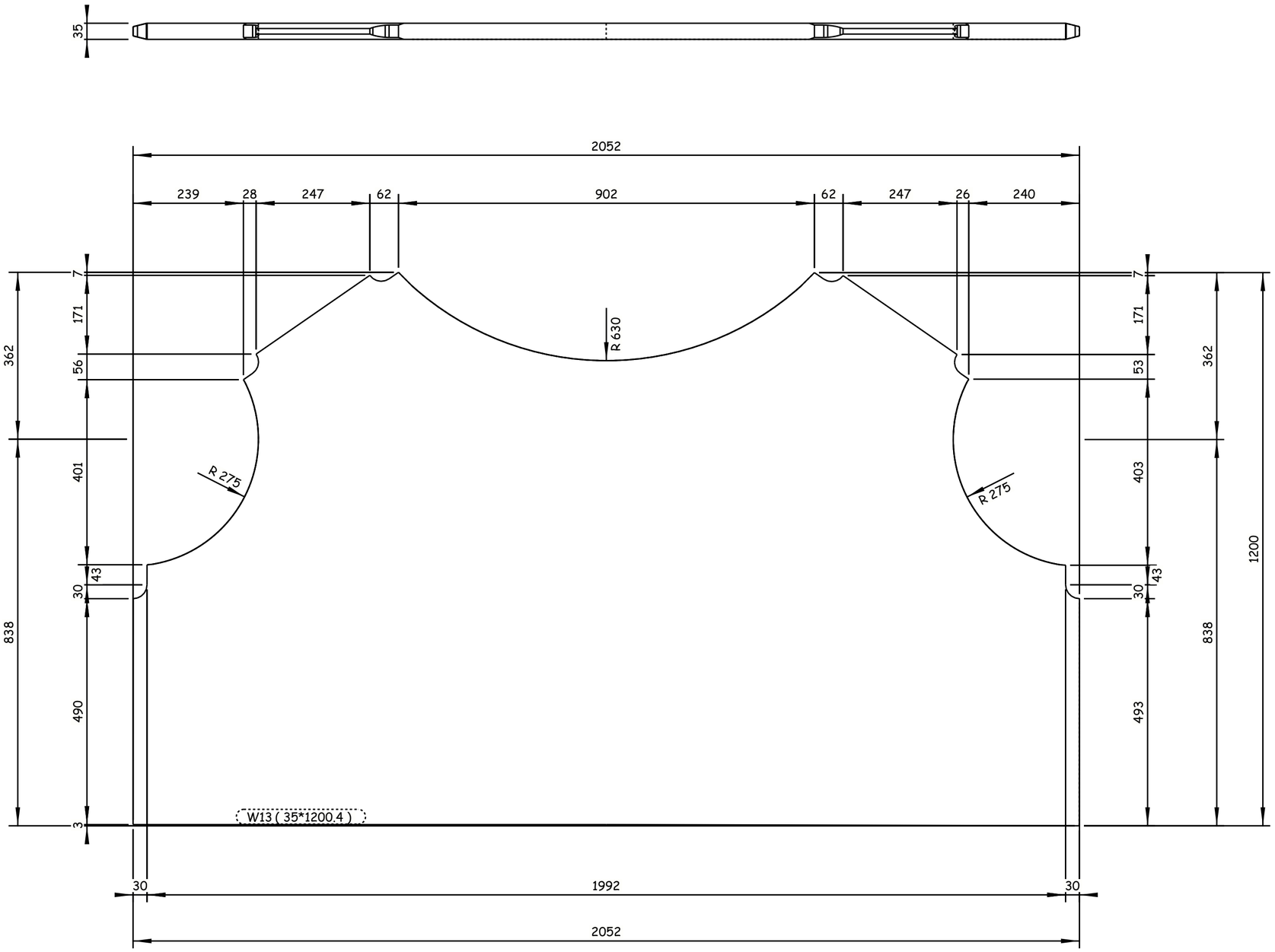

2 REQUIRED AS DRAWN E.SH W13

Tekla structures

GENERAL NOTES:

1. ALL DIMENSIONS ARE IN MILLIMETERS UNLESS OTHERWISE SPECIFIED.
2. LEVELS ARE IN METERS
3. DESIGN SERVICE LIFE OF 100 YEARS.
4. FLANGES OF TOP AND BOTTOM CHORDS TO BE SUPPLIED WITH IMPROVED THROUGH THICKNESS PROPERTIES Z25 ACCORDING TO EN10164.

REFERENCE DRAWINGS

1	93M-0407-SEN-6OL11-END-10118-B PAGE 01:17
2	
3	
4	
5	
6	
7	
8	
9	
10	
11	

6TH OF OCTOBER CITY RAIL TRANSIT MONORAIL &
NEW CAPITAL CITY RAIL TRANSIT MONORAIL

The Authority
Hill International
Authority Consultant

ORASCOM CONSTRUCTION
BOMBARDIER
Main Contractor

SENER
SHAKER CONSULTING GROUP
Designer

CONTRACTOR:
CONSULTANT:
ENGINEERING HOUSE FOR CONSULTANCY

6th of October Monorail
Engineering Unit
Valid For Construction

REV	DATE	BY	DESCRIPTION	CHK	APD
A	20-11-24	M.SH	ISSUE FOR APPROVAL	A.SH	M.M

SCALE: AS SHOWN
SHOP DRAWING
DATE: 20.11.2024

DRAWING TITLE:
6TH OF OCTOBER MONORAIL
SHOP DRAWING FOR BRIDGE 6OL11-37
STEEL TRUSS (I).
W13

Project Code	Rubric	Initiator	Lot	Ref	Number	Revision
93M	0407	ACC	60L11	DWG	90120	A

-Drawing shall be updated according to the comments on the GA drawing.
-Approval is subjected to the approval of coordination package between multi-discipline.

REVIEWED WITH COMMENT
MONORAILS PROJECT

All holes are 22mm U.N.O Length & Area & Weight per piece

Mark	Profile	Grade	QTY	Length	Area	Weight
W14	PL15*662.5	S355J2N	24	700.0	0.47	25.5

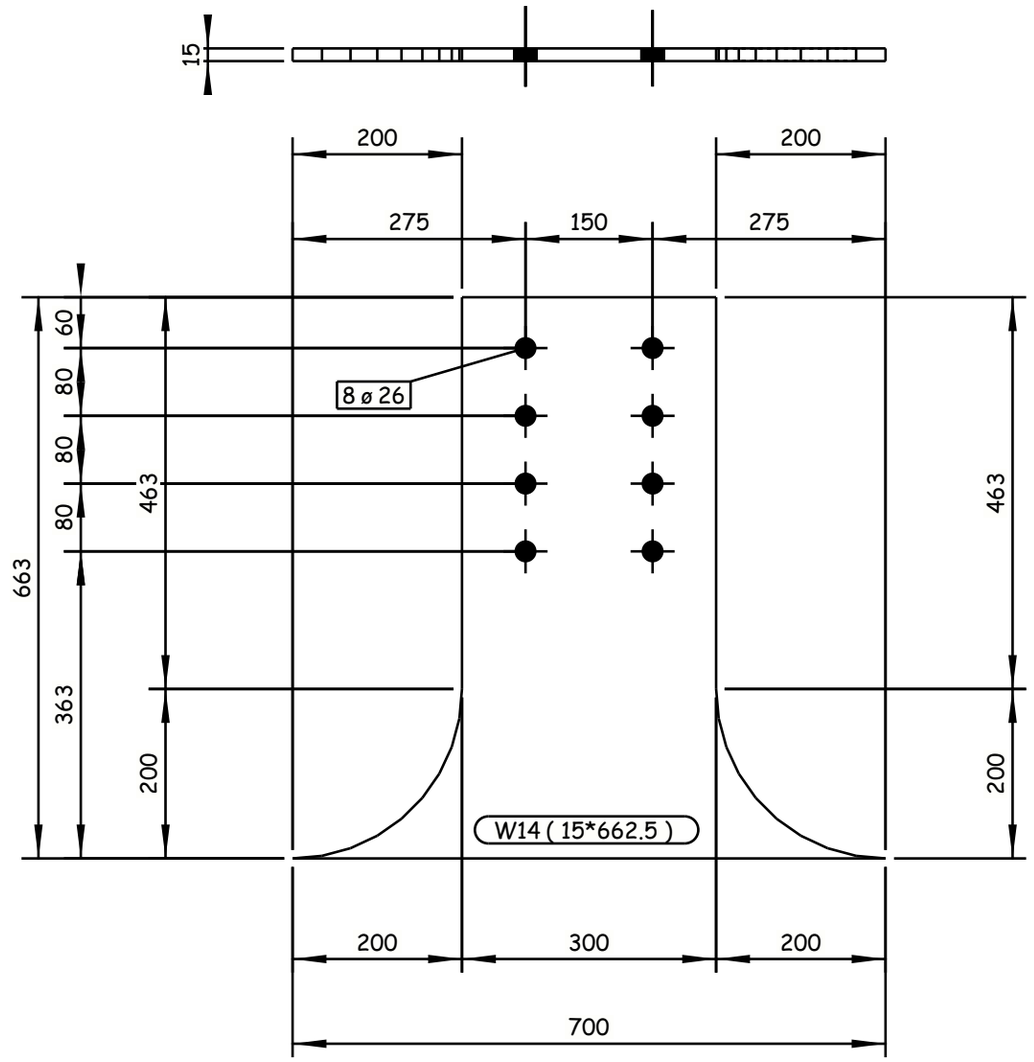

24 REQUIRED AS DRAWN E.SH W14

6 October Monorail
Engineering Unit
Valid For Construction

Tekla structures

GENERAL NOTES:
1. ALL DIMENSIONS ARE IN MILLIMETERS UNLESS OTHERWISE SPECIFIED.
2. LEVELS ARE IN METERS
3. DESIGN SERVICE LIFE OF 100 YEARS.
4. FLANGES OF TOP AND BOTTOM CHORDS TO BE SUPPLIED WITH IMPROVED THROUGH THICKNESS PROPERTIES Z25 ACCORDING TO EN10164.

REFERENCE DRAWINGS

1	93M-0407-SEN-6OL11-END-10118-B PAGE 01:17
2	
3	
4	
5	
6	
7	
8	
9	
10	
11	

6TH OF OCTOBER CITY RAIL TRANSIT MONORAIL &
NEW CAPITAL CITY RAIL TRANSIT MONORAIL

The Authority
Hill International
Authority Consultant

Main Contractor

Designer

CONTRACTOR CONSULTANT:
ENGINEERING HOUSE FOR CONSULTANCY

SCALE: AS SHOWN | CHD DRAWING | DATE: 20.11.2024

DRAWING TITLE:
6TH OF OCTOBER MONORAIL
SHOP DRAWING FOR BRIDGE 6OL11-37
STEEL TRUSS (I).
W14

REV	DATE	BY	DESCRIPTION	CHK	APD
A	20-11-24	M.SH	ISSUE FOR APPROVAL	A.SH	M.M

Project Code	Rubric	Initiator	Lot	Ref	Number	Revision
93M	0407	ACC	60L11	DWG	90121	A

-Drawing shall be updated according to the comments on the GA drawing.
-Approval is subjected to the approval of coordination package between multi-discipline.

REVIEWED WITH COMMENT
MONORAILS PROJECT

All holes are 22mm U.N.O Length & Area & Weight per piece

Mark	Profile	Grade	QTY	Length	Area	Weight
W15	PL15*602.5	S355J2N	8	700.0	0.43	23.3

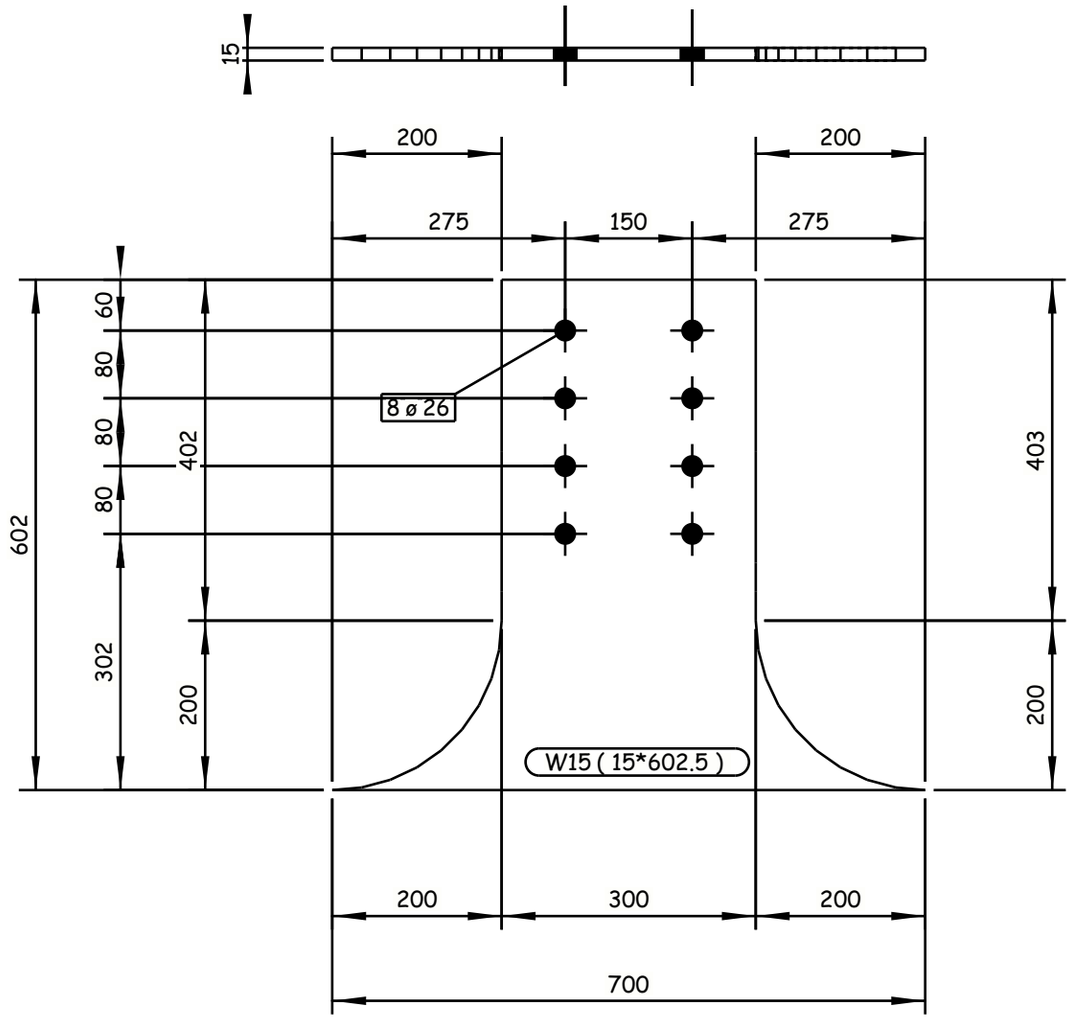

8 REQUIRED AS DRAWN E.SH W15

GENERAL NOTES:

1. ALL DIMENSIONS ARE IN MILLIMETERS UNLESS OTHERWISE SPECIFIED.
2. LEVELS ARE IN METERS
3. DESIGN SERVICE LIFE OF 100 YEARS.
4. FLANGES OF TOP AND BOTTOM CHORDS TO BE SUPPLIED WITH IMPROVED THROUGH THICKNESS PROPERTIES Z25 ACCORDING TO EN10164.

REFERENCE DRAWINGS

1	93M-0407-SEN-6OL11-END-10118-B PAGE 01:17
2	
3	
4	
5	
6	
7	
8	
9	
10	
11	

6TH OF OCTOBER CITY RAIL TRANSIT MONORAIL &
NEW CAPITAL CITY RAIL TRANSIT MONORAIL

The Authority
Hill International
Authority Consultant

Main Contractor

Designer

CONTRACTOR / CONSULTANT:

ENGINEERING HOUSE FOR CONSULTANCY

SCALE: AS SHOWN | CHK'D DRAWING | DATE: 20.11.2024

REV	DATE	BY	DESCRIPTION	CHK	APD
A	20-11-24	M.SH	ISSUE FOR APPROVAL	A.SH	M.M

6 October Monorail
Engineering Unit
Valid For Construction

DRAWING TITLE:
6TH OF OCTOBER MONORAIL
SHOP DRAWING FOR BRIDGE 6OL11-37
STEEL TRUSS (I).
W15

Project Code	Rubric	Initiator	Lot	Ref	Number	Revision
93M	0407	ACC	60L11	DWG	90122	A

Tekla structures

-Drawing shall be updated according to the comments on the GA drawing.
-Approval is subjected to the approval of coordination package between multi-discipline.

REVIEWED WITH COMMENT
MONORAILS PROJECT

All holes are 22mm U.N.O Length & Area & Weight per piece

Mark	Profile	Grade	QTY	Length	Area	Weight
W16	PL25*700	S355J2N	2	1483.4	2.13	196.7

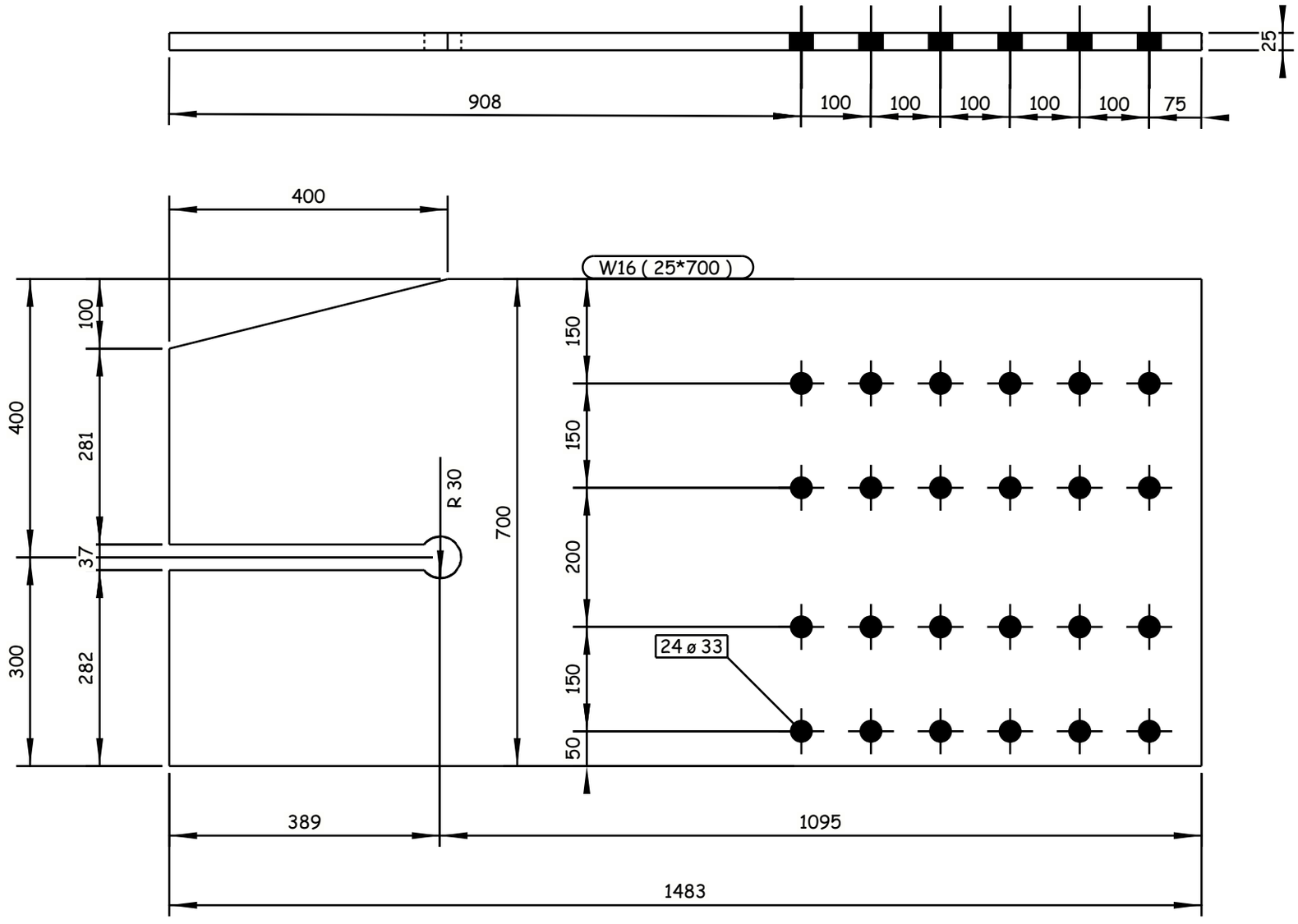

2 REQUIRED AS DRAWN E.SH W16

6 October Monorail
Engineering Unit
Valid For Construction

GENERAL NOTES:

1. ALL DIMENSIONS ARE IN MILLIMETERS UNLESS OTHERWISE SPECIFIED.
2. LEVELS ARE IN METERS
3. DESIGN SERVICE LIFE OF 100 YEARS.
4. FLANGES OF TOP AND BOTTOM CHORDS TO BE SUPPLIED WITH IMPROVED THROUGH THICKNESS PROPERTIES Z25 ACCORDING TO EN10164.

REFERENCE DRAWINGS

1	93M-0407-SEN-6OL11-END-10118-B PAGE 01:17
2	
3	
4	
5	
6	
7	
8	
9	
10	
11	

6TH OF OCTOBER CITY RAIL TRANSIT MONORAIL &
NEW CAPITAL CITY RAIL TRANSIT MONORAIL

The Authority
Hill International
Authority Consultant

Main Contractor

Designer

CONTRACTOR:
CONSULTANT:

ENGINEERING HOUSE FOR CONSULTANCY

SCALE: AS SHOWN | SHOP DRAWING | DATE: 20.11.2024

REV	DATE	BY	DESCRIPTION	CHK	APD
A	20-11-24	M.SH	ISSUE FOR APPROVAL	A.SH	M.M

DRAWING TITLE:
6TH OF OCTOBER MONORAIL
SHOP DRAWING FOR BRIDGE 6OL11-37
STEEL TRUSS (I).
W16

Project Code	Rubric	Initiator	Lot	Ref	Number	Revision
93M	0407	ACC	60L11	DWG	90123	A

Tekla structures

-Drawing shall be updated according to the comments on the GA drawing.
-Approval is subjected to the approval of coordination package between multi-discipline.

REVIEWED WITH COMMENT
MONORAILS PROJECT

All holes are 22mm U.N.O Length & Area & Weight per piece

Mark	Profile	Grade	QTY	Length	Area	Weight
W17	PL35*1200.4	S355J2N	2	2052.2	4.15	539.8

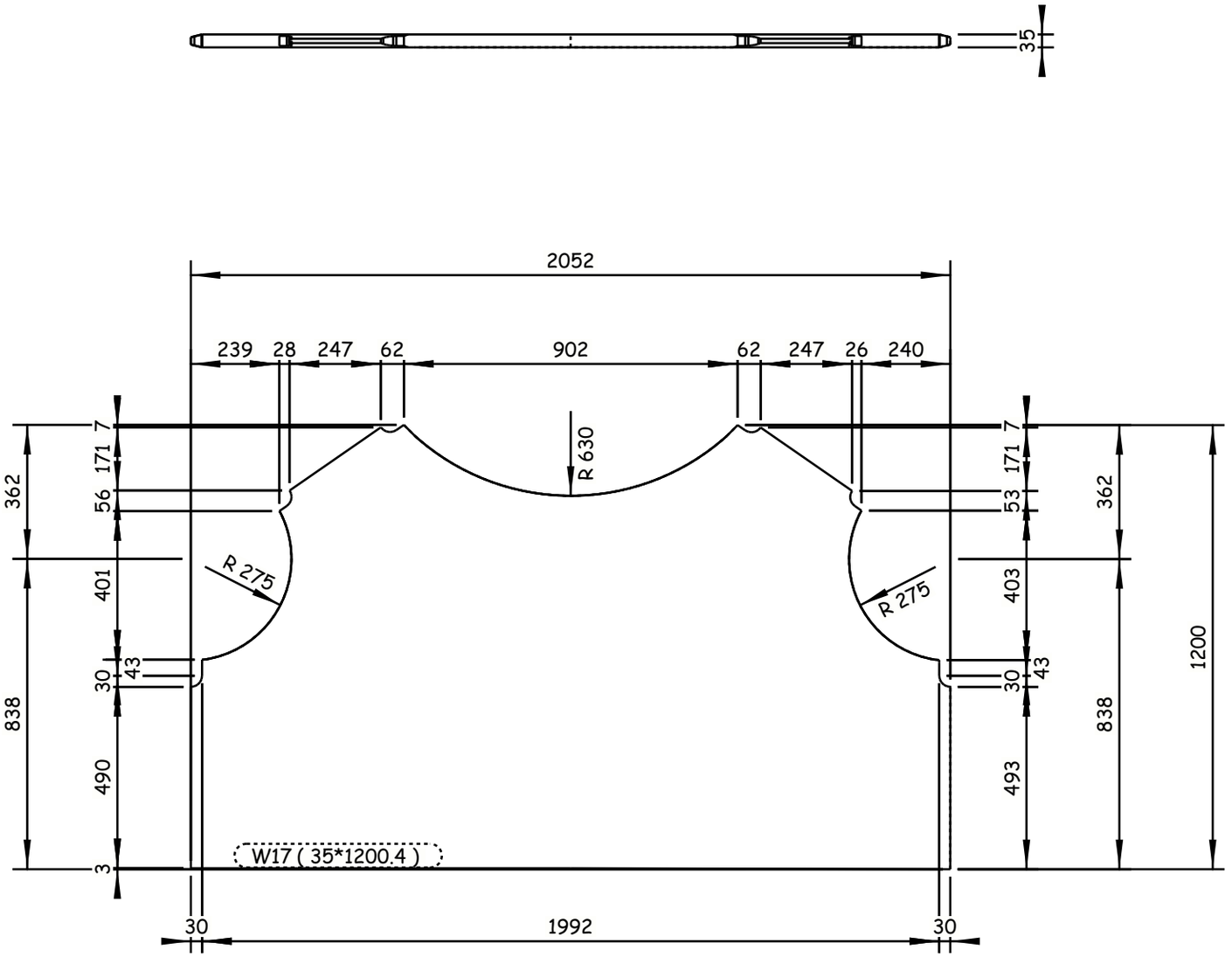

2 REQUIRED AS DRAWN E.SH W17

6 October Monorail
Engineering Unit
Valid For Construction

GENERAL NOTES:

1. ALL DIMENSIONS ARE IN MILLIMETERS UNLESS OTHERWISE SPECIFIED.
2. LEVELS ARE IN METERS
3. DESIGN SERVICE LIFE OF 100 YEARS.
4. FLANGES OF TOP AND BOTTOM CHORDS TO BE SUPPLIED WITH IMPROVED THROUGH THICKNESS PROPERTIES Z25 ACCORDING TO EN10164.

REFERENCE DRAWINGS

1	93M-0407-SEN-6OL11-END-10118-B PAGE 01:17
2	
3	
4	
5	
6	
7	
8	
9	
10	
11	

6TH OF OCTOBER CITY RAIL TRANSIT MONORAIL &
NEW CAPITAL CITY RAIL TRANSIT MONORAIL

The Authority
Hill International
Authority Consultant

Main Contractor

Designer

CONTRACTOR / CONSULTANT:
ENGINEERING HOUSE FOR CONSULTANCY

SCALE: AS SHOWN | CHD DRAWING | DATE: 20.11.2024

DRAWING TITLE:
6TH OF OCTOBER MONORAIL
SHOP DRAWING FOR BRIDGE 6OL11-37
STEEL TRUSS (I).
W17

REV	DATE	BY	DESCRIPTION	CHK	APD
A	20-11-24	M.SH	ISSUE FOR APPROVAL	A.SH	M.M

Project Code	Rubric	Initiator	Lot	Ref	Number	Revision
93M	04	07	ACC	60	L11	DWG	90124	A

Tekla structures

-Drawing shall be updated according to the comments on the GA drawing.
-Approval is subjected to the approval of coordination package between multi-discipline.

REVIEWED WITH COMMENT
MONORAILS PROJECT

All holes are 22mm U.N.O Length & Area & Weight per piece

Mark	Profile	Grade	QTY	Length	Area	Weight
W18	PL20*548	S355J2N	16	765.6	0.89	65.7

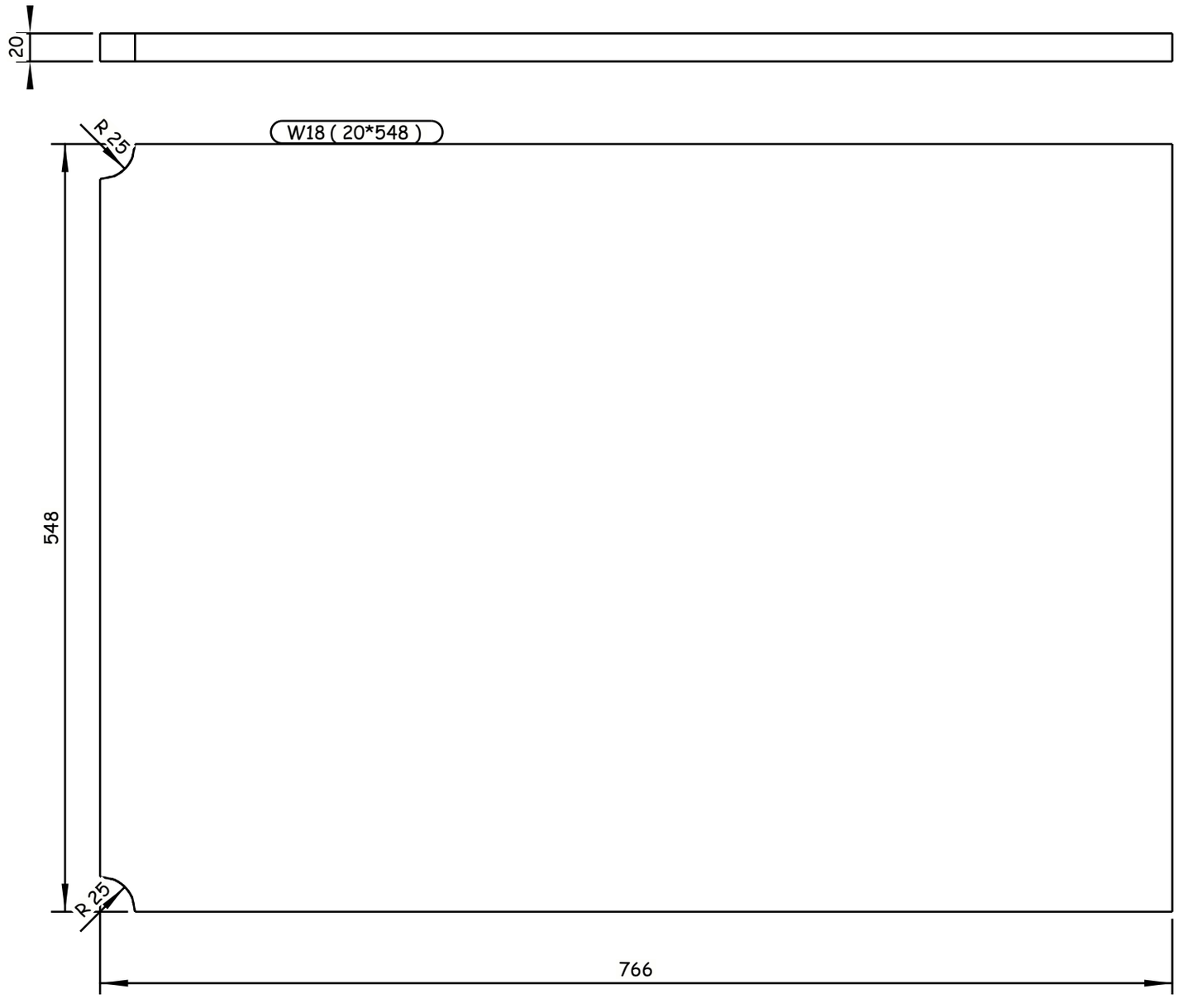

16 REQUIRED AS DRAWN E.SH W18

GENERAL NOTES:

1. ALL DIMENSIONS ARE IN MILLIMETERS UNLESS OTHERWISE SPECIFIED.
2. LEVELS ARE IN METERS
3. DESIGN SERVICE LIFE OF 100 YEARS.
4. FLANGES OF TOP AND BOTTOM CHORDS TO BE SUPPLIED WITH IMPROVED THROUGH THICKNESS PROPERTIES Z25 ACCORDING TO EN10164.

REFERENCE DRAWINGS

1	93M-0407-SEN-6OL11-END-10118-B PAGE 01:17
2	
3	
4	
5	
6	
7	
8	
9	
10	
11	

6TH OF OCTOBER CITY RAIL TRANSIT MONORAIL &
NEW CAPITAL CITY RAIL TRANSIT MONORAIL

The Authority — Hill International Authority Consultant | Main Contractor | Designer

CONTRACTOR / CONSULTANT:
ENGINEERING HOUSE FOR CONSULTANCY

SCALE: AS SHOWN | CHK'D DRAWING | DATE: 20.11.2024

REV	DATE	BY	DESCRIPTION	CHK	APD
A	20-11-24	M.SH	ISSUE FOR APPROVAL	A.SH	M.M

6 October: Monorail Engineering Unit
Valid For Construction

DRAWING TITLE:
6TH OF OCTOBER MONORAIL
SHOP DRAWING FOR BRIDGE 6OL11-37
STEEL TRUSS (I).
W18

Project Code	Rubric	Initiator	Lot	Ref	Number	Revision
9 3 M	0 4 0 7	A C C	6 0 L 1 1	D W G	90125	A

Tekla structures

-Drawing shall be updated according to the comments on the GA drawing.
-Approval is subjected to the approval of coordination package between multi-discipline.

REVIEWED WITH COMMENT
MONORAILS PROJECT

All holes are 22mm U.N.O Length & Area & Weight per piece

Mark	Profile	Grade	QTY	Length	Area	Weight
W19	PL20*548	S355J2N	16	773.0	0.90	66.4

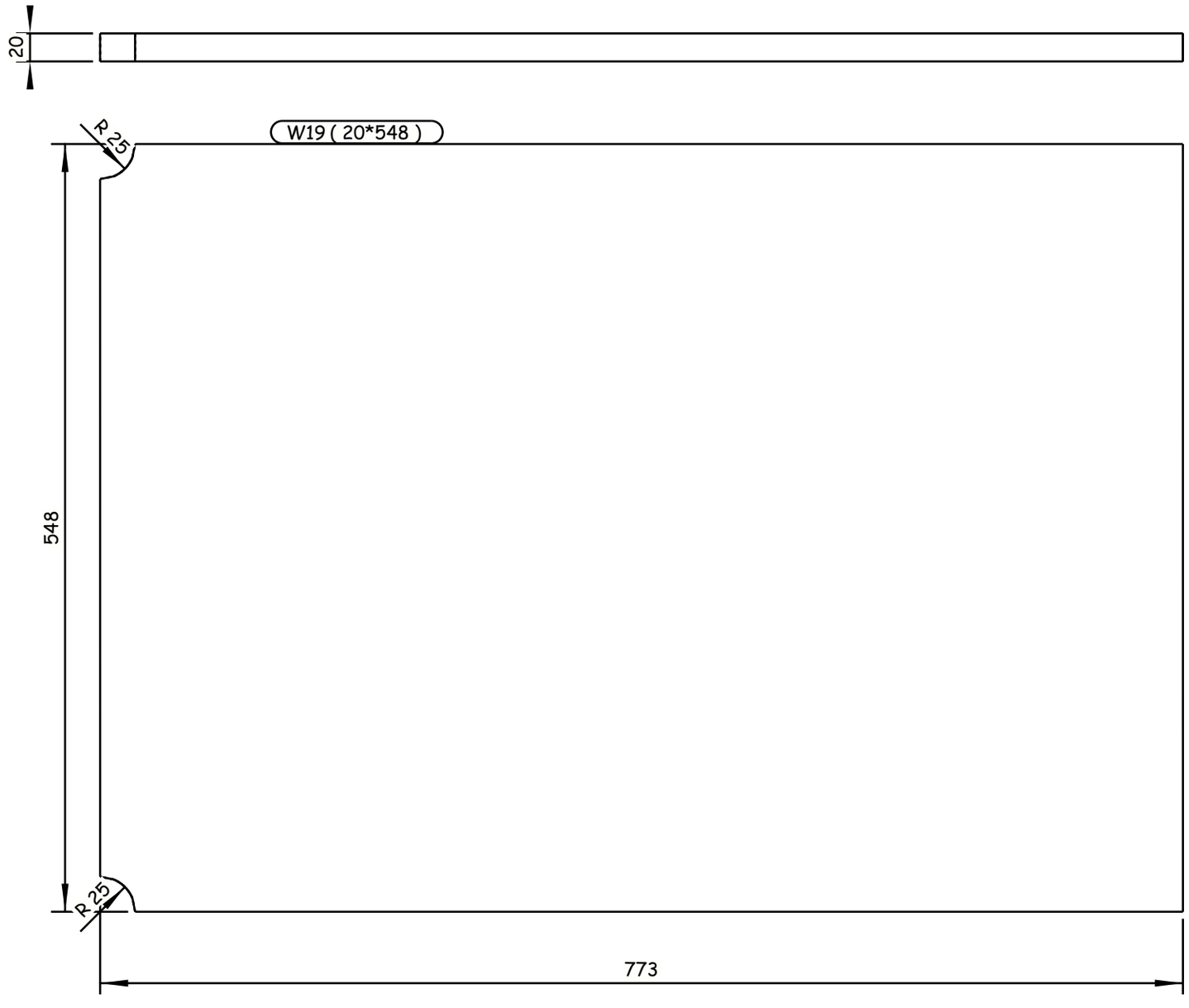

16 REQUIRED AS DRAWN E.SH W19

GENERAL NOTES:

1. ALL DIMENSIONS ARE IN MILLIMETERS UNLESS OTHERWISE SPECIFIED.
2. LEVELS ARE IN METERS
3. DESIGN SERVICE LIFE OF 100 YEARS.
4. FLANGES OF TOP AND BOTTOM CHORDS TO BE SUPPLIED WITH IMPROVED THROUGH THICKNESS PROPERTIES Z25 ACCORDING TO EN10164.

REFERENCE DRAWINGS

1	93M-0407-SEN-6OL11-END-10118-B PAGE 01:17
2	
3	
4	
5	
6	
7	
8	
9	
10	
11	

6TH OF OCTOBER CITY RAIL TRANSIT MONORAIL &
NEW CAPITAL CITY RAIL TRANSIT MONORAIL

The Authority
Hill International
Authority Consultant

Main Contractor

Designer

CONTRACTOR
CONSULTANT :

ENGINEERING HOUSE FOR CONSULTANCY

SCALE
AS SHOWN

CHK'D DRAWING

DATE
20.11.2024

REV	DATE	BY	DESCRIPTION	CHK	APD
A	20-11-24	M.SH	ISSUE FOR APPROVAL	A.SH	M.M

6 October Monorail
Engineering Unit
Valid For Construction

DRAWING TITLE:
6TH OF OCTOBER MONORAIL
SHOP DRAWING FOR BRIDGE 6OL11-37
STEEL TRUSS (I).
W19

Project Code	Rubric	Initiator	Lot	Ref	Number	Revision
9 3 M	0 4 0 7	A C C	6 0 L 1 1	D W G	90126	A

Tekla structures

-Drawing shall be updated according to the comments on the GA drawing.
-Approval is subjected to the approval of coordination package between multi-discipline.

REVIEWED WITH COMMENT
MONORAILS PROJECT

All holes are 22mm U.N.O Length & Area & Weight per piece

Mark	Profile	Grade	QTY	Length	Area	Weight
W20	PL20*538	S355J2N	12	765.6	0.87	64.5

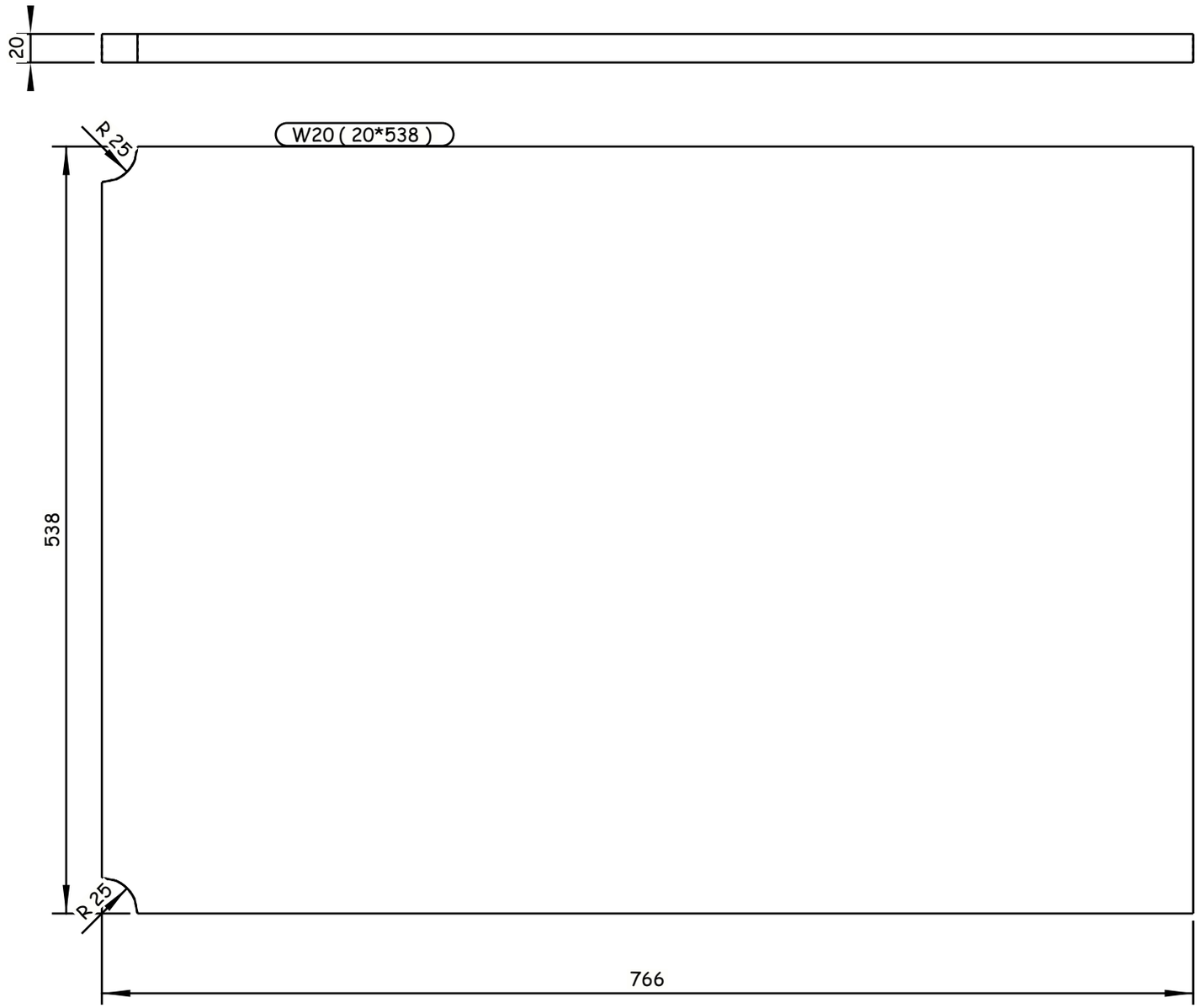

12 REQUIRED AS DRAWN E.SH W20

GENERAL NOTES:

1. ALL DIMENSIONS ARE IN MILLIMETERS UNLESS OTHERWISE SPECIFIED.
2. LEVELS ARE IN METERS
3. DESIGN SERVICE LIFE OF 100 YEARS.
4. FLANGES OF TOP AND BOTTOM CHORDS TO BE SUPPLIED WITH IMPROVED THROUGH THICKNESS PROPERTIES Z25 ACCORDING TO EN10164.

REFERENCE DRAWINGS

1	93M-0407-SEN-6OL11-END-10118-B PAGE 01:17
2	
3	
4	
5	
6	
7	
8	
9	
10	
11	

6TH OF OCTOBER CITY RAIL TRANSIT MONORAIL &
NEW CAPITAL CITY RAIL TRANSIT MONORAIL

The Authority
Hill International
Authority Consultant

ORASCOM CONSTRUCTION
Main Contractor

BOMBARDIER
SENER
SHAKER CONSULTANCY GROUP
Designer

CONTRACTOR CONSULTANT:
ENGINEERING HOUSE FOR CONSULTANCY

6 October Monorail
Engineering Unit
Valid For Construction

SCALE	SHOP DRAWING	DATE
AS SHOWN		20.11.2024

REV	DATE	BY	DESCRIPTION	CHK	APD
A	20-11-24	M.SH	ISSUE FOR APPROVAL	A.SH	M.M

DRAWING TITLE:
6TH OF OCTOBER MONORAIL
SHOP DRAWING FOR BRIDGE 6OL11-37
STEEL TRUSS (I).
W20

Project Code	Rubric	Initiator	Lot	Ref	Number	Revision
93M	0407	ACC	6OL11	DWG	90127	A

Tekla structures

-Drawing shall be updated according to the comments on the GA drawing.
-Approval is subjected to the approval of coordination package between multi-discipline.

REVIEWED WITH COMMENT
MONORAILS PROJECT

All holes are 22mm U.N.O Length & Area & Weight per piece

Mark	Profile	Grade	QTY	Length	Area	Weight
W21	PL20*538	S355J2N	12	773.0	0.88	65.1

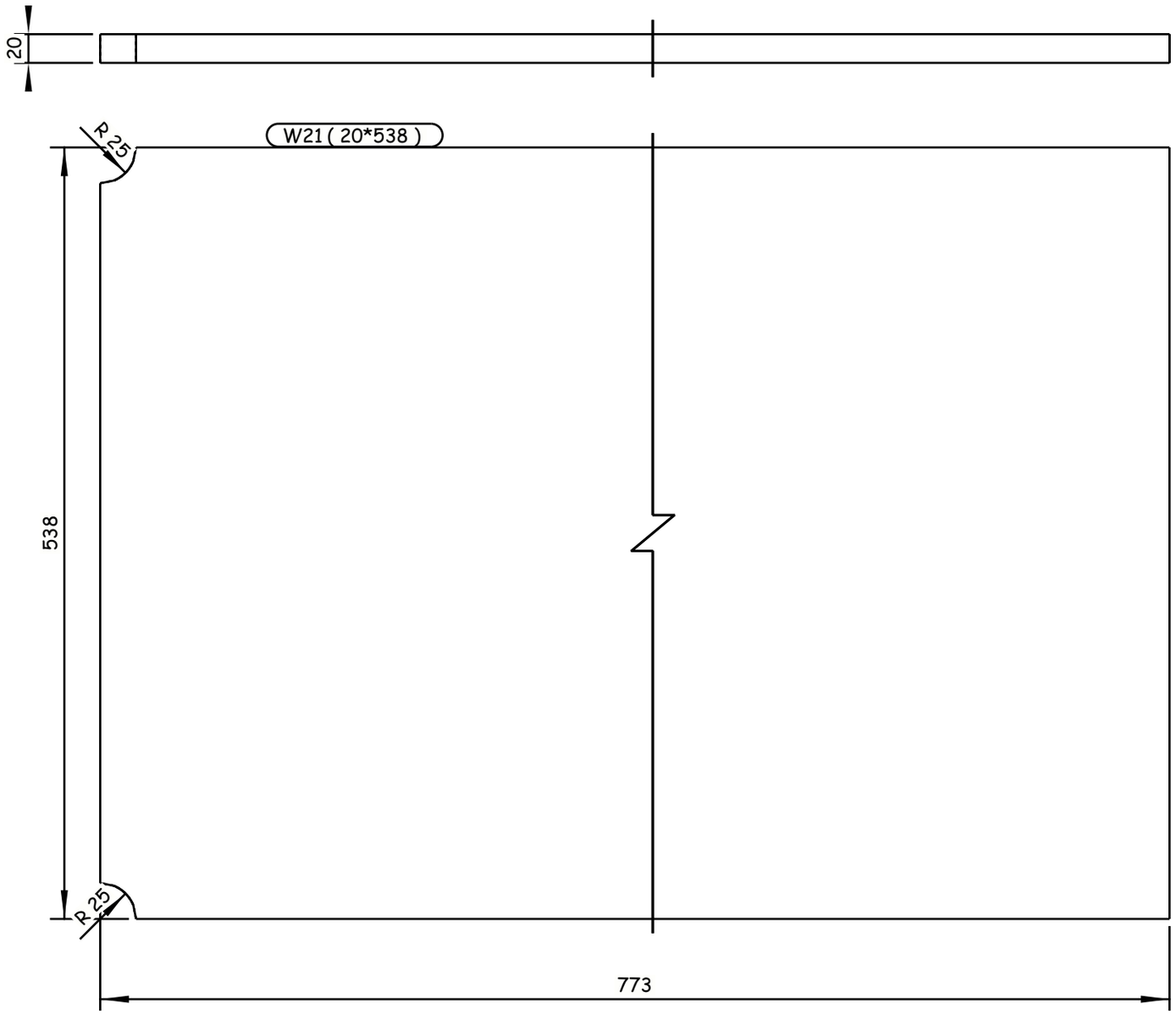

12 REQUIRED AS DRAWN E.SH W21

GENERAL NOTES:

1. ALL DIMENSIONS ARE IN MILLIMETERS UNLESS OTHERWISE SPECIFIED.
2. LEVELS ARE IN METERS
3. DESIGN SERVICE LIFE OF 100 YEARS.
4. FLANGES OF TOP AND BOTTOM CHORDS TO BE SUPPLIED WITH IMPROVED THROUGH THICKNESS PROPERTIES Z25 ACCORDING TO EN10164.

REFERENCE DRAWINGS

1	93M-0407-SEN-6OL11-END-10118-B PAGE 01:17
2	
3	
4	
5	
6	
7	
8	
9	
10	
11	

6TH OF OCTOBER CITY RAIL TRANSIT MONORAIL &
NEW CAPITAL CITY RAIL TRANSIT MONORAIL

The Authority
Hill International
Authority Consultant

ORASCOM CONSTRUCTION
Main Contractor

BOMBARDIER
SENER
SHAKER CONSULTANCY GROUP
Designer

CONTRACTOR / CONSULTANT:
ENGINEERING HOUSE FOR CONSULTANCY

SCALE: AS SHOWN | CHK'D DRAWING | DATE: 20.11.2024

REV	DATE	BY	DESCRIPTION	CHK	APD
A	20-11-24	M.SH	ISSUE FOR APPROVAL	A.SH	M.M

6 October Monorail
Engineering Unit
Valid For Construction

DRAWING TITLE:
6TH OF OCTOBER MONORAIL
SHOP DRAWING FOR BRIDGE 6OL11-37
STEEL TRUSS (I).
W21

Project Code	Rubric	Initiator	Lot	Ref	Number	Revision
93M	0407	ACC	60L11	DWG	90128	A

Tekla structures

-Drawing shall be updated according to the comments on the GA drawing.
-Approval is subjected to the approval of coordination package between multi-discipline.

REVIEWED WITH COMMENT
MONORAILS PROJECT

All holes are 22mm U.N.O Length & Area & Weight per piece

Mark	Profile	Grade	QTY	Length	Area	Weight
W22	PL15*196.9	S355J2N	6	251.8	0.09	4.7

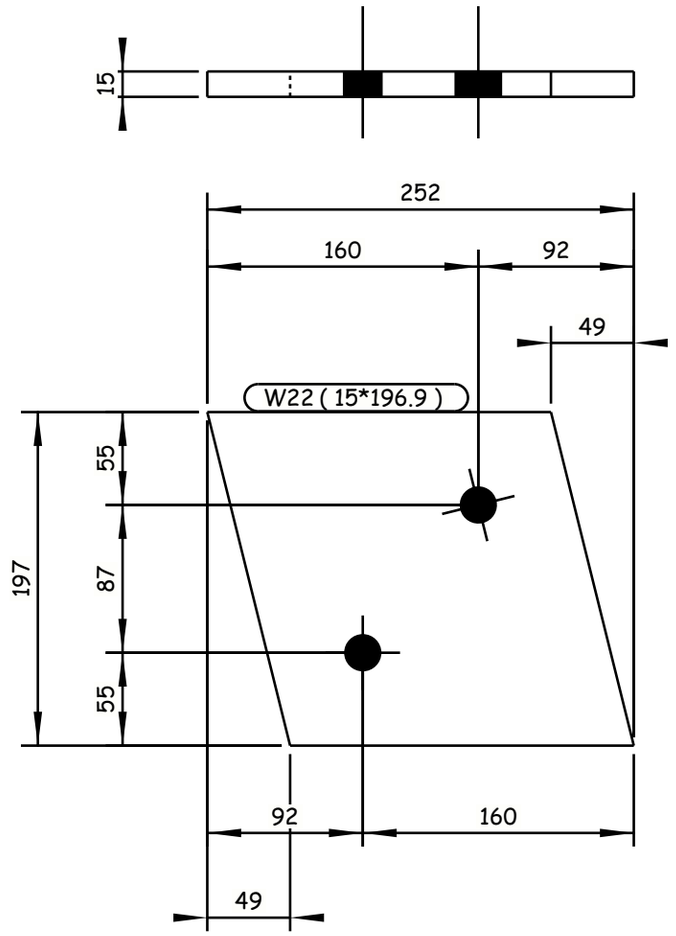

6 REQUIRED AS DRAWN E.SH W22

GENERAL NOTES:

1. ALL DIMENSIONS ARE IN MILLIMETERS UNLESS OTHERWISE SPECIFIED.
2. LEVELS ARE IN METERS
3. DESIGN SERVICE LIFE OF 100 YEARS.
4. FLANGES OF TOP AND BOTTOM CHORDS TO BE SUPPLIED WITH IMPROVED THROUGH THICKNESS PROPERTIES Z25 ACCORDING TO EN10164.

REFERENCE DRAWINGS

1	93M-0407-SEN-6OL11-END-10118-B PAGE 01:17
2	
3	
4	
5	
6	
7	
8	
9	
10	
11	

6TH OF OCTOBER CITY RAIL TRANSIT MONORAIL &
NEW CAPITAL CITY RAIL TRANSIT MONORAIL

The Authority — Hill International Authority Consultant | ORASCOM CONSTRUCTION — BOMBARDIER — Main Contractor | SENER — SHAKER CONSULTANCY GROUP — Designer

CONTRACTOR / CONSULTANT:
EHC ENGINEERING HOUSE FOR CONSULTANCY

6 October Monorail
Engineering Unit
Valid For Construction

SCALE	CHD DRAWING	DATE
AS SHOWN		20.11.2024

REV	DATE	BY	DESCRIPTION	CHK	APD
A	20-11-24	M.SH	ISSUE FOR APPROVAL	A.SH	M.M

DRAWING TITLE:
6TH OF OCTOBER MONORAIL
SHOP DRAWING FOR BRIDGE 6OL11-37
STEEL TRUSS (I).
W22

Project Code	Rubric	Initiator	Lot	Ref	Number	Revision
93M	0407	ACC	60L11	DWG	90129	A

Tekla structures

-Drawing shall be updated according to the comments on the GA drawing.
-Approval is subjected to the approval of coordination package between multi-discipline.

REVIEWED WITH COMMENT
MONORAILS PROJECT

All holes are 22mm U.N.O Length & Area & Weight per piece

Mark	Profile	Grade	QTY	Length	Area	Weight
W23	PL15*342.5	S235	8	735.0	0.51	28.3

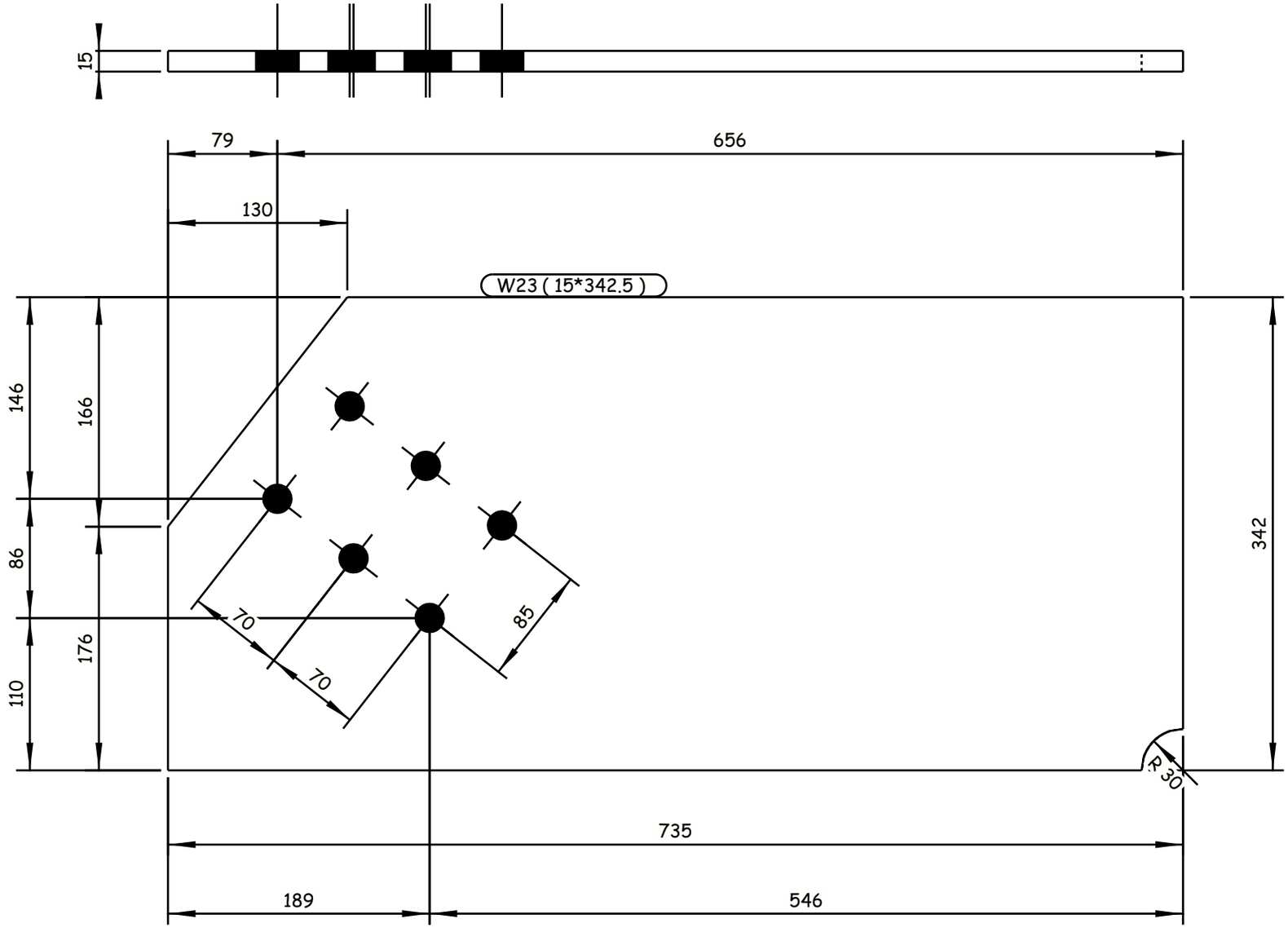

8 REQUIRED AS DRAWN E.SH W23

GENERAL NOTES:

1. ALL DIMENSIONS ARE IN MILLIMETERS UNLESS OTHERWISE SPECIFIED.
2. LEVELS ARE IN METERS
3. DESIGN SERVICE LIFE OF 100 YEARS.
4. FLANGES OF TOP AND BOTTOM CHORDS TO BE SUPPLIED WITH IMPROVED THROUGH THICKNESS PROPERTIES Z25 ACCORDING TO EN10164.

REFERENCE DRAWINGS

1	93M-0407-SEN-6OL11-END-10118-B PAGE 01:17
2	
3	
4	
5	
6	
7	
8	
9	
10	
11	

6TH OF OCTOBER CITY RAIL TRANSIT MONORAIL &
NEW CAPITAL CITY RAIL TRANSIT MONORAIL

The Authority — Hill International Authority Consultant — Main Contractor — Designer

CONTRACTOR / CONSULTANT:

ENGINEERING HOUSE FOR CONSULTANCY

6 October Monorail Engineering Unit
Valid For Construction

SCALE: AS SHOWN | SHD DRAWING | DATE: 20.11.2024

DRAWING TITLE:
6TH OF OCTOBER MONORAIL
SHOP DRAWING FOR BRIDGE 6OL11-37
STEEL TRUSS (I).
W23

REV	DATE	BY	DESCRIPTION	CHK	APD
A	20-11-24	M.SH	ISSUE FOR APPROVAL	A.SH	M.M

Project Code	Rubric	Initiator	Lot	Ref	Number	Revision
9 3 M 0 4 0 7	A C C	6 0 L 1 1	D W G		90130	A

Tekla structures

-Drawing shall be updated according to the comments on the GA drawing.
-Approval is subjected to the approval of coordination package between multi-discipline.

REVIEWED WITH COMMENT
MONORAILS PROJECT

All holes are 22mm U.N.O Length & Area & Weight per piece

Mark	Profile	Grade	QTY	Length	Area	Weight
W24	PL15*342.5	S235	6	735.0	0.51	28.4

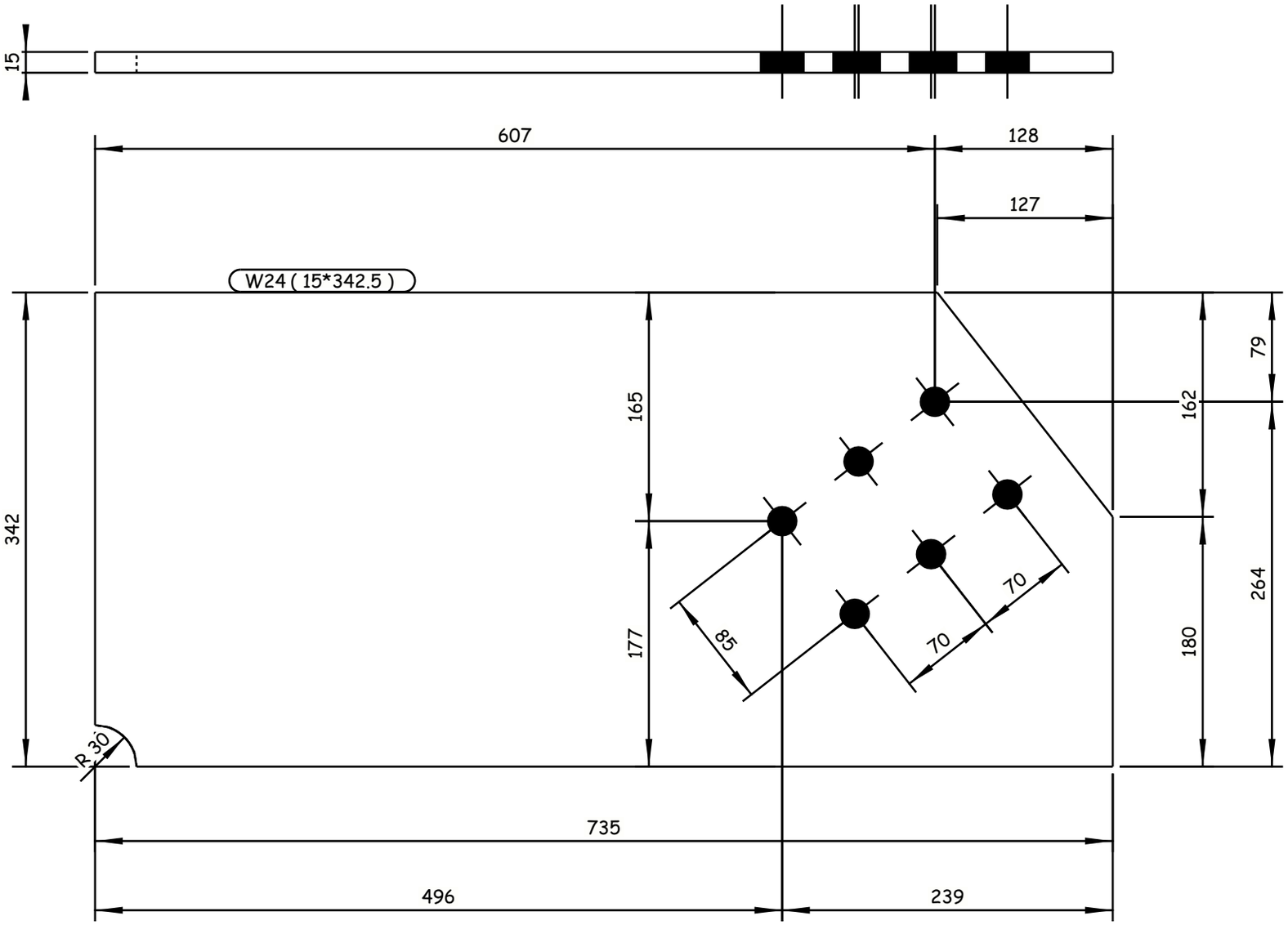

6 REQUIRED AS DRAWN E.SH W24

Tekla structures

GENERAL NOTES:

1. ALL DIMENSIONS ARE IN MILLIMETERS UNLESS OTHERWISE SPECIFIED.
2. LEVELS ARE IN METERS
3. DESIGN SERVICE LIFE OF 100 YEARS.
4. FLANGES OF TOP AND BOTTOM CHORDS TO BE SUPPLIED WITH IMPROVED THROUGH THICKNESS PROPERTIES Z25 ACCORDING TO EN10164.

REFERENCE DRAWINGS

1	93M-0407-SEN-6OL11-END-10118-B PAGE 01:17
2	
3	
4	
5	
6	
7	
8	
9	
10	
11	

6TH OF OCTOBER CITY RAIL TRANSIT MONORAIL &
NEW CAPITAL CITY RAIL TRANSIT MONORAIL

The Authority
Hill International
Authority Consultant

Main Contractor

Designer

CONTRACTOR / CONSULTANT :
ENGINEERING HOUSE FOR CONSULTANCY

SCALE: AS SHOWN | SHD/DRWING | DATE: 20.11.2024

DRAWING TITLE:
6TH OF OCTOBER MONORAIL
SHOP DRAWING FOR BRIDGE 6OL11-37
STEEL TRUSS (I).
W24

REV	DATE	BY	DESCRIPTION	CHK	APD
A	20-11-24	M.SH	ISSUE FOR APPROVAL	A.SH	M.M

Project Code	Rubric	Initiator	Lot	Ref	Number	Revision
9 3 M	0 4 0 7	A C C	6 0 L 1 1	D W G	90131	A

6 October Monorail
Engineering Unit
Valid For Construction

-Drawing shall be updated according to the comments on the GA drawing.
-Approval is subjected to the approval of coordination package between multi-discipline.

REVIEWED WITH COMMENT MONORAILS PROJECT

All holes are 22mm U.N.O Length & Area & Weight per piece						
W25	PL15*342.5	S235	6	735.0	0.51	28.4
Mark	Profile	Grade	QTY	Length	Area	Weight

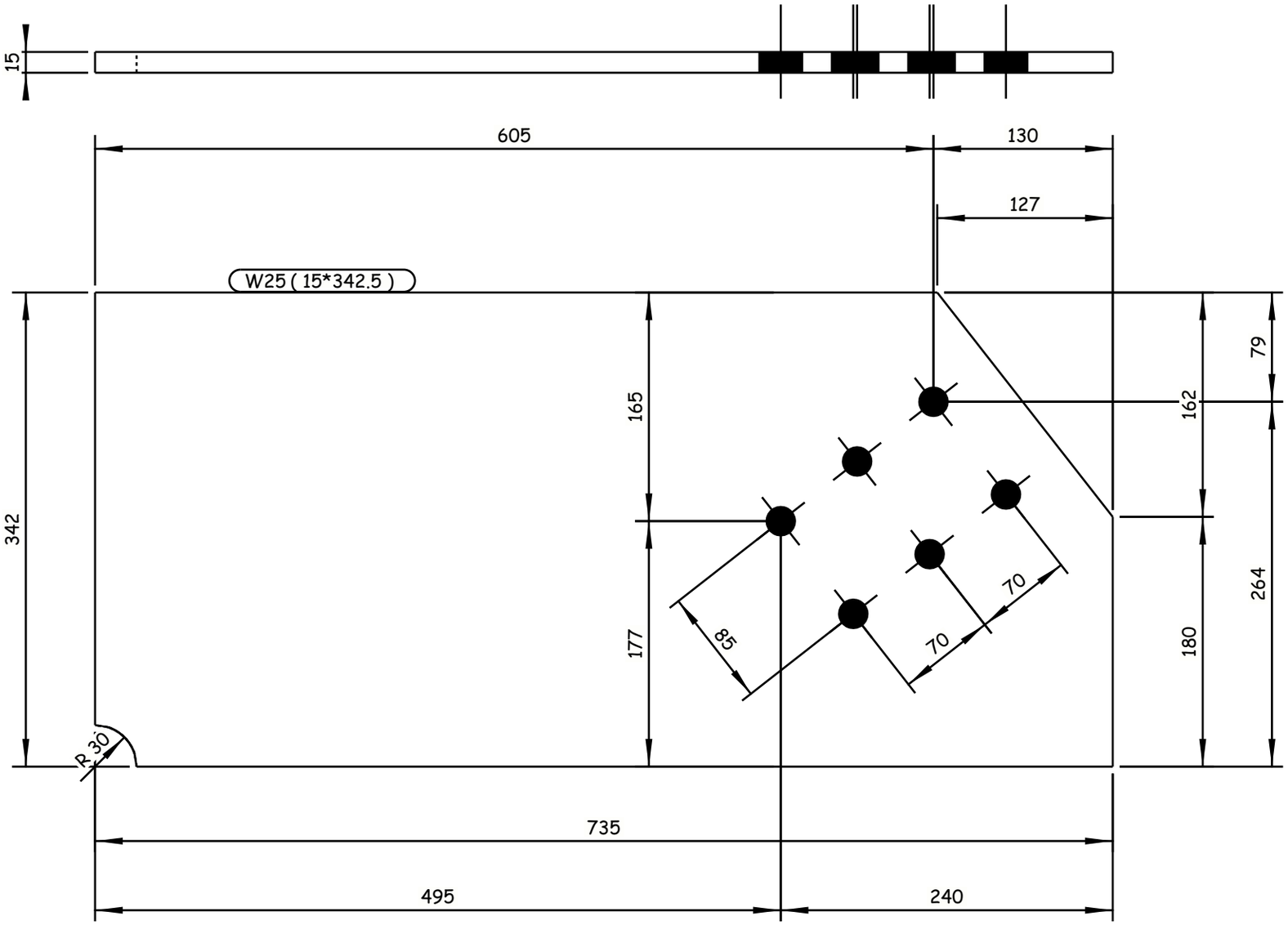

6 REQUIRED AS DRAWN E.SH W25

6 October Monorail Engineering Unit
Valid For Construction

GENERAL NOTES:

1. ALL DIMENSIONS ARE IN MILLIMETERS UNLESS OTHERWISE SPECIFIED.
2. LEVELS ARE IN METERS
3. DESIGN SERVICE LIFE OF 100 YEARS.
4. FLANGES OF TOP AND BOTTOM CHORDS TO BE SUPPLIED WITH IMPROVED THROUGH THICKNESS PROPERTIES Z25 ACCORDING TO EN10164.

REFERENCE DRAWINGS

1	93M-0407-SEN-6OL11-END-10118-B PAGE 01:17
2	
3	
4	
5	
6	
7	
8	
9	
10	
11	

6TH OF OCTOBER CITY RAIL TRANSIT MONORAIL & NEW CAPITAL CITY RAIL TRANSIT MONORAIL

وزارة النقل MINISTRY OF TRANSPORT
The Authority
Hill International
Authority Consultant

ORASCOM CONSTRUCTION
BOMBARDIER
Main Contractor

SENER
SHAKER CONSULTANCY GROUP
Designer

CONTRACTOR CONSULTANT:
HEHC
ENGINEERING HOUSE FOR CONSULTANCY

SCALE AS SHOWN	SHOP DRAWING	DATE 20.11.2024

REV	DATE	BY	DESCRIPTION	CHK	APD
A	20-11-24	M.SH	ISSUE FOR APPROVAL	A.SH	M.M

DRAWING TITLE:
6TH OF OCTOBER MONORAIL
SHOP DRAWING FOR BRIDGE 6OL11-37
STEEL TRUSS (I).
W25

Project Code	Rubric	Initiator	Lot	Ref	Number	Revision
93M	0407	ACC	6OL11	DWG	90132	A

Tekla structures

-Drawing shall be updated according to the comments on the GA drawing.
-Approval is subjected to the approval of coordination package between multi-discipline.

REVIEWED WITH COMMENT
MONORAILS PROJECT

All holes are 22mm U.N.O Length & Area & Weight per piece

Mark	Profile	Grade	QTY	Length	Area	Weight
W26	FLT25*350	S355J2N	16	1000.0	0.52	44.9

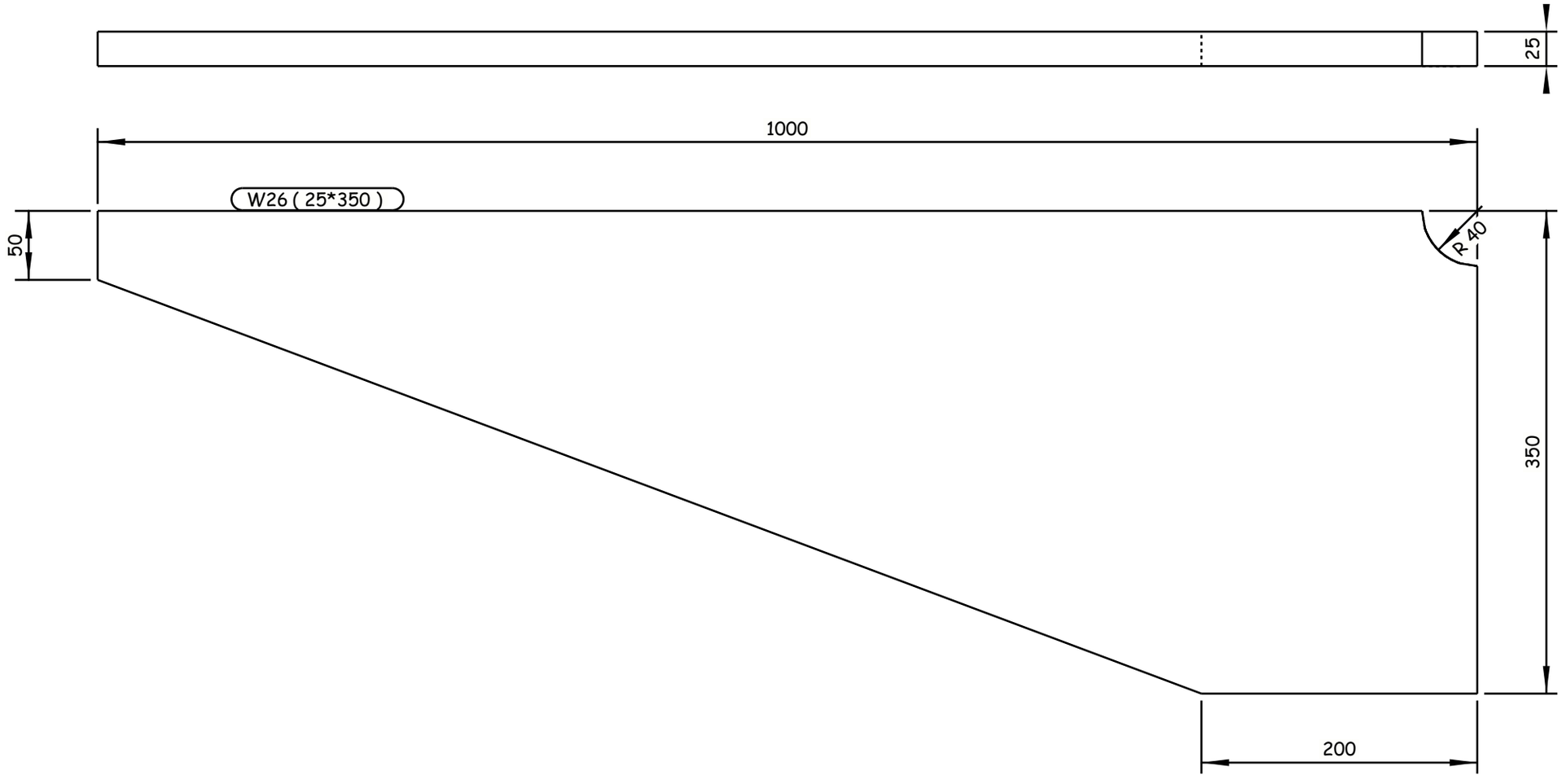

16 REQUIRED AS DRAWN E.SH W26

GENERAL NOTES:

1. ALL DIMENSIONS ARE IN MILLIMETERS UNLESS OTHERWISE SPECIFIED.
2. LEVELS ARE IN METERS
3. DESIGN SERVICE LIFE OF 100 YEARS.
4. FLANGES OF TOP AND BOTTOM CHORDS TO BE SUPPLIED WITH IMPROVED THROUGH THICKNESS PROPERTIES Z25 ACCORDING TO EN10164.

REFERENCE DRAWINGS

1	93M-0407-SEN-6OL11-END-10118-B PAGE 01:17
2	
3	
4	
5	
6	
7	
8	
9	
10	
11	

6TH OF OCTOBER CITY RAIL TRANSIT MONORAIL &
NEW CAPITAL CITY RAIL TRANSIT MONORAIL

The Authority
Hill International
Authority Consultant

Main Contractor

Designer

CONTRACTOR / CONSULTANT :

ENGINEERING HOUSE FOR CONSULTANCY

6 October Monorail
Engineering Unit
Valid For Construction

SCALE	SHOP DRAWING	DATE
AS SHOWN		20.11.2024

REV	DATE	BY	DESCRIPTION	CHK	APD
A	20-11-24	M.SH	ISSUE FOR APPROVAL	A.SH	M.M

DRAWING TITLE:
6TH OF OCTOBER MONORAIL
SHOP DRAWING FOR BRIDGE 6OL11-37
STEEL TRUSS (I).
W26

Project Code	Rubric	Initiator	Lot	Ref	Number	Revision
93M	0407	ACC	60L11	DWG	90133	A

Tekla structures

-Drawing shall be updated according to the comments on the GA drawing.
-Approval is subjected to the approval of coordination package between multi-discipline.

REVIEWED WITH COMMENT
MONORAILS PROJECT

All holes are 22mm U.N.O Length & Area & Weight per piece

Mark	Profile	Grade	QTY	Length	Area	Weight
W27	PL25*915	S355J2N	4	1000.0	1.77	164.8

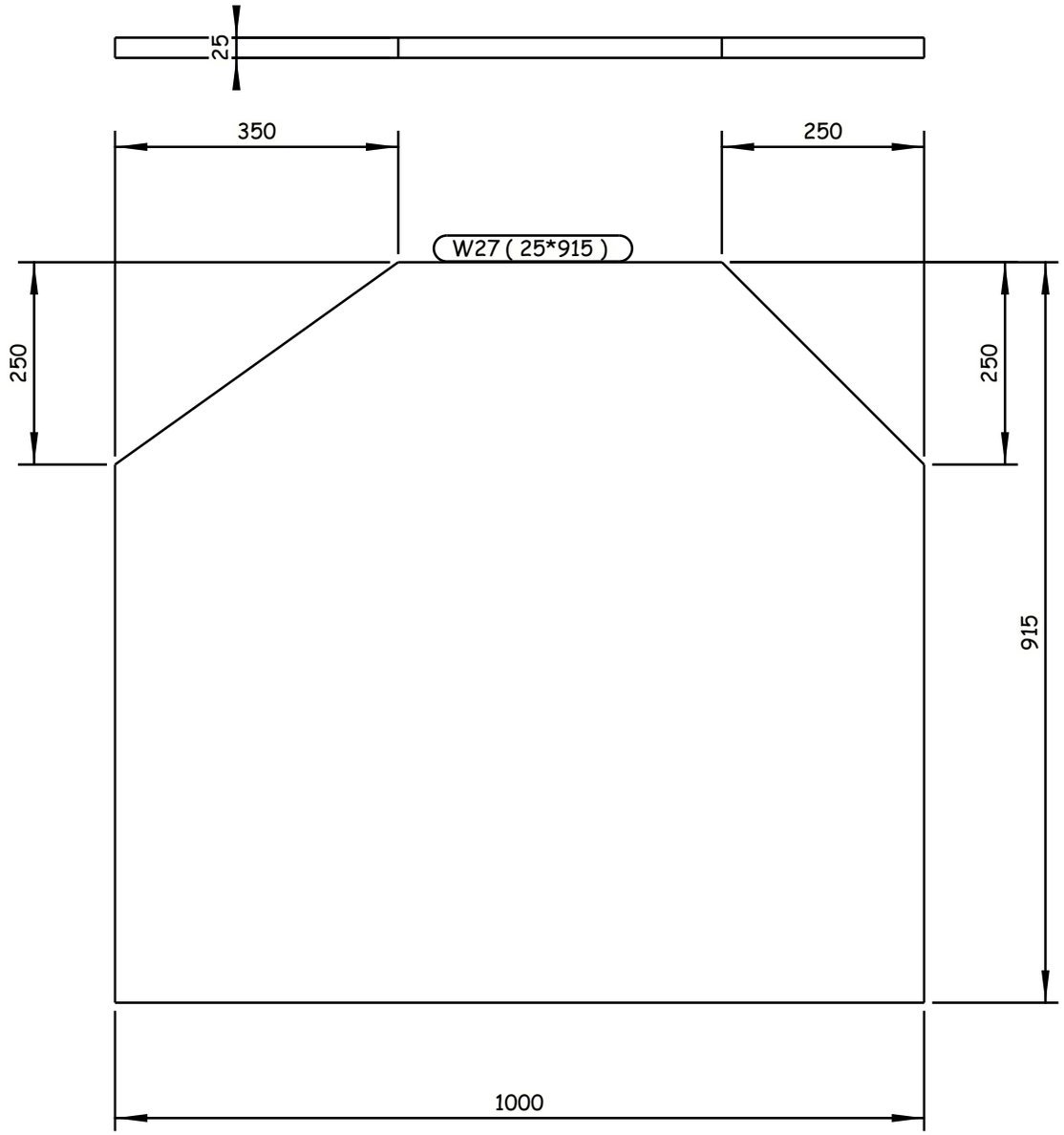

4 REQUIRED AS DRAWN E.SH W27

6 October Monorail
Engineering Unit
Valid For Construction

GENERAL NOTES:

1. ALL DIMENSIONS ARE IN MILLIMETERS UNLESS OTHERWISE SPECIFIED.
2. LEVELS ARE IN METERS
3. DESIGN SERVICE LIFE OF 100 YEARS.
4. FLANGES OF TOP AND BOTTOM CHORDS TO BE SUPPLIED WITH IMPROVED THROUGH THICKNESS PROPERTIES Z25 ACCORDING TO EN10164.

REFERENCE DRAWINGS

1	93M-0407-SEN-6OL11-END-10118-B PAGE 01:17
2	
3	
4	
5	
6	
7	
8	
9	
10	
11	

6TH OF OCTOBER CITY RAIL TRANSIT MONORAIL &
NEW CAPITAL CITY RAIL TRANSIT MONORAIL

The Authority
Hill International
Authority Consultant

ORASCOM CONSTRUCTION
Main Contractor

BOMBARDIER
SENER
SHAKER CONSULTANCY GROUP
Designer

CONTRACTOR / CONSULTANT :
ENGINEERING HOUSE FOR CONSULTANCY

REV	DATE	BY	DESCRIPTION	CHK	APD
A	20-11-24	M.SH	ISSUE FOR APPROVAL	A.SH	M.M

SCALE: AS SHOWN | SHOP DRAWING | DATE: 20.11.2024

DRAWING TITLE:
6TH OF OCTOBER MONORAIL
SHOP DRAWING FOR BRIDGE 6OL11-37
STEEL TRUSS (I).
W27

Project Code	Rubric	Initiator	Lot	Ref	Number	Revision
93M	0407	ACC	60L11	DWG	90134	A

Tekla structures

-Drawing shall be updated according to the comments on the GA drawing.
-Approval is subjected to the approval of coordination package between multi-discipline.

REVIEWED WITH COMMENT
MONORAILS PROJECT

All holes are 22mm U.N.O Length & Area & Weight per piece

Mark	Profile	Grade	QTY	Length	Area	Weight
W28	PL60*800	S355***	4	800.0	1.15	0.0

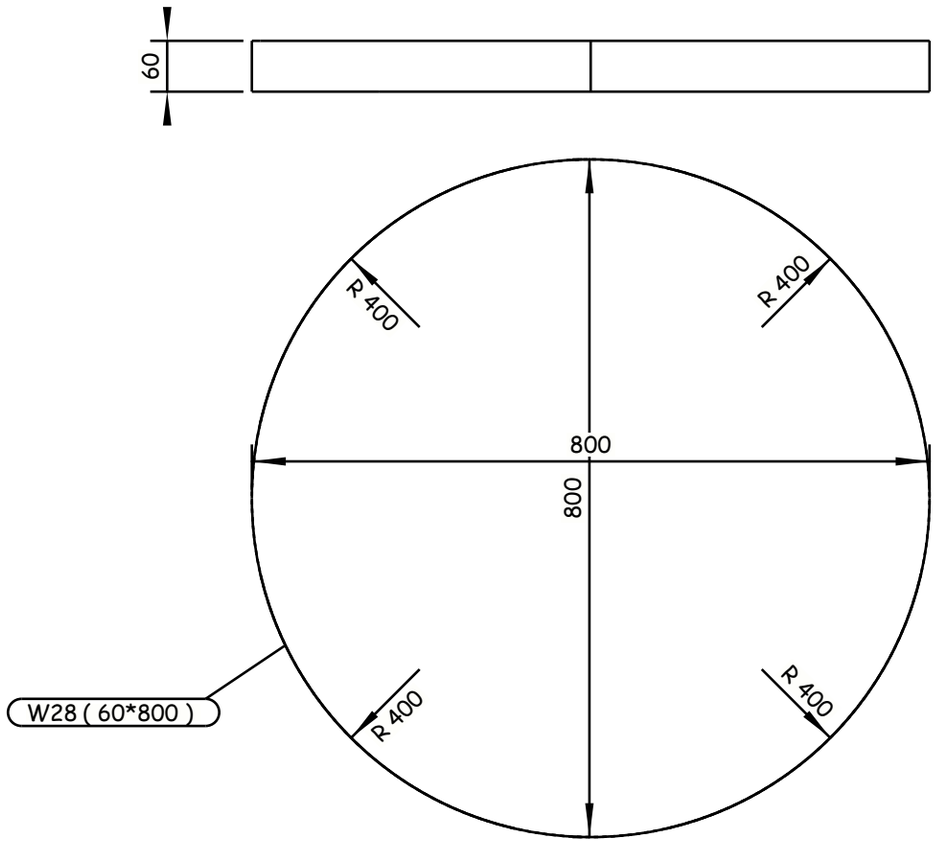

4 REQUIRED AS DRAWN E.SH W28

Tekla structures

GENERAL NOTES:
1. ALL DIMENSIONS ARE IN MILLIMETERS UNLESS OTHERWISE SPECIFIED.
2. LEVELS ARE IN METERS
3. DESIGN SERVICE LIFE OF 100 YEARS.
4. FLANGES OF TOP AND BOTTOM CHORDS TO BE SUPPLIED WITH IMPROVED THROUGH THICKNESS PROPERTIES Z25 ACCORDING TO EN10164.

REFERENCE DRAWINGS

1	93M-0407-SEN-6OL11-END-10118-B PAGE 01:17
2	
3	
4	
5	
6	
7	
8	
9	
10	
11	

6TH OF OCTOBER CITY RAIL TRANSIT MONORAIL &
NEW CAPITAL CITY RAIL TRANSIT MONORAIL

The Authority
Hill International
Authority Consultant
Main Contractor
Designer

CONTRACTOR / CONSULTANT :
ENGINEERING HOUSE FOR CONSULTANCY

6 October Monorail
Engineering Unit
Valid For Construction

SCALE: AS SHOWN | CHD DRAWING | DATE: 20.11.2024

REV	DATE	BY	DESCRIPTION	CHK	APD
A	20-11-24	M.SH	ISSUE FOR APPROVAL	A.SH	M.M

DRAWING TITLE:
6TH OF OCTOBER MONORAIL
SHOP DRAWING FOR BRIDGE 6OL11-37
STEEL TRUSS (I).
W28

Project Code	Rubric	Initiator	Lot	Ref	Number	Revision
93M	0407	ACC	60L11	DWG	90135	A

-Drawing shall be updated according to the comments on the GA drawing.
-Approval is subjected to the approval of coordination package between multi-discipline.

REVIEWED WITH COMMENT
MONORAILS PROJECT

All holes are 22mm U.N.O Length & Area & Weight per piece

Mark	Profile	Grade	QTY	Length	Area	Weight
W29	PL25*432.5	S355J2N	4	1574.0	1.22	109.9

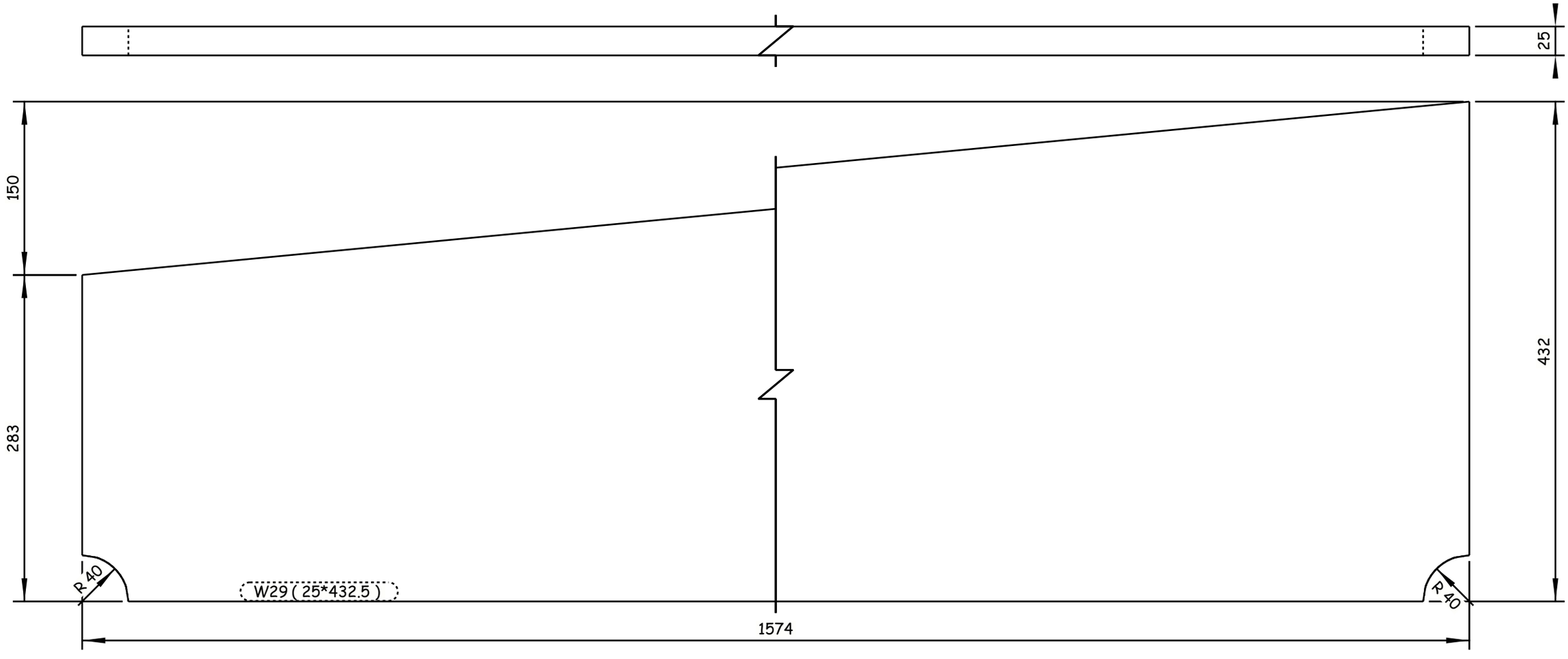

4 REQUIRED AS DRAWN E.SH W29

Tekla structures

GENERAL NOTES:

1. ALL DIMENSIONS ARE IN MILLIMETERS UNLESS OTHERWISE SPECIFIED.
2. LEVELS ARE IN METERS
3. DESIGN SERVICE LIFE OF 100 YEARS.
4. FLANGES OF TOP AND BOTTOM CHORDS TO BE SUPPLIED WITH IMPROVED THROUGH THICKNESS PROPERTIES Z25 ACCORDING TO EN10164.

REFERENCE DRAWINGS

1	93M-0407-SEN-6OL11-END-10118-B PAGE 01:17
2	
3	
4	
5	
6	
7	
8	
9	
10	
11	

6TH OF OCTOBER CITY RAIL TRANSIT MONORAIL &
NEW CAPITAL CITY RAIL TRANSIT MONORAIL

The Authority
Hill International
Authority Consultant

ORASCOM CONSTRUCTION
Main Contractor

BOMBARDIER
SENER
SHAKER CONSULTANCY GROUP
Designer

CONTRACTOR / CONSULTANT:
ENGINEERING HOUSE FOR CONSULTANCY

6 October Monorail
Engineering Unit
Valid For Construction

SCALE	CH/DRAWING	DATE
AS SHOWN		20.11.2024

REV	DATE	BY	DESCRIPTION	CHK	APD
A	20-11-24	M.SH	ISSUE FOR APPROVAL	A.SH	M.M

DRAWING TITLE:
6TH OF OCTOBER MONORAIL
SHOP DRAWING FOR BRIDGE 6OL11-37
STEEL TRUSS (I).
W29

Project Code	Rubric	Initiator	Lot	Ref	Number	Revision
93M	0407	ACC	60L11	DWG	90136	A

-Drawing shall be updated according to the comments on the GA drawing.
-Approval is subjected to the approval of coordination package between multi-discipline.

REVIEWED WITH COMMENT
MONORAILS PROJECT

All holes are 22mm U.N.O Length & Area & Weight per piece						
W30	PL20*547.9	S355J2N	4	777.8	0.89	65.9
Mark	Profile	Grade	QTY	Length	Area	Weight

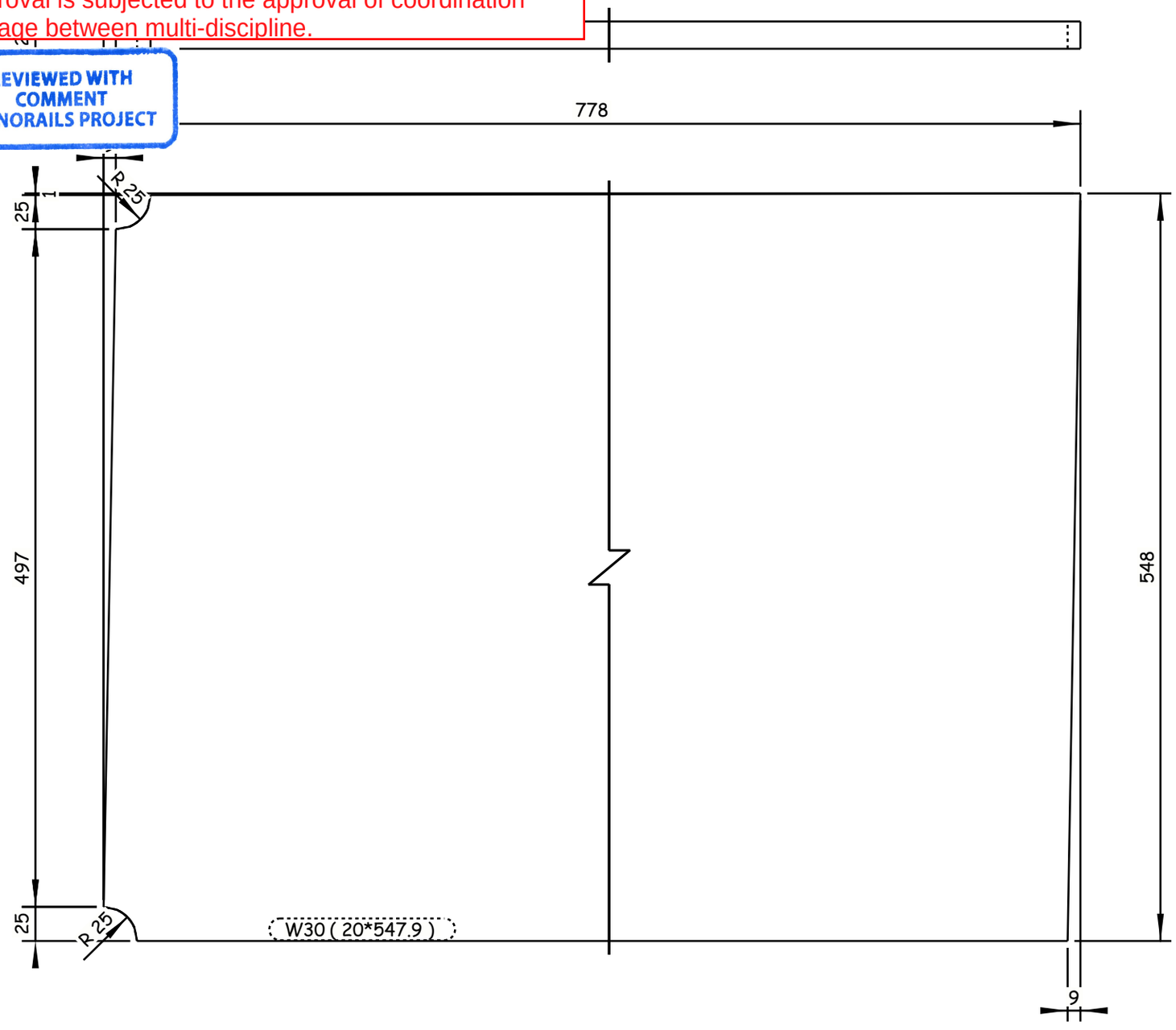

4 REQUIRED AS DRAWN E.SH W30

Tekla structures

GENERAL NOTES:

1. ALL DIMENSIONS ARE IN MILLIMETERS UNLESS OTHERWISE SPECIFIED.
2. LEVELS ARE IN METERS
3. DESIGN SERVICE LIFE OF 100 YEARS.
4. FLANGES OF TOP AND BOTTOM CHORDS TO BE SUPPLIED WITH IMPROVED THROUGH THICKNESS PROPERTIES Z25 ACCORDING TO EN10164.

REFERENCE DRAWINGS

1	93M-0407-SEN-6OL11-END-10118-B PAGE 01:17
2	
3	
4	
5	
6	
7	
8	
9	
10	
11	

6TH OF OCTOBER CITY RAIL TRANSIT MONORAIL &
NEW CAPITAL CITY RAIL TRANSIT MONORAIL

The Authority
Hill International
Authority Consultant

ORASCOM CONSTRUCTION
Main Contractor

BOMBARDIER
SENER
SHAKER CONSULTANCY GROUP
Designer

CONTRACTOR / CONSULTANT:
ENGINEERING HOUSE FOR CONSULTANCY

SCALE: AS SHOWN | CHK'D DRAWING | DATE: 20.11.2024

REV	DATE	BY	DESCRIPTION	CHK	APD
A	20-11-24	M.SH	ISSUE FOR APPROVAL	A.SH	M.M

6 October Monorail
Engineering Unit
Valid For Construction

DRAWING TITLE:
6TH OF OCTOBER MONORAIL
SHOP DRAWING FOR BRIDGE 6OL11-37
STEEL TRUSS (I).
W30

Project Code	Rubric	Initiator	Lot	Ref	Number	Revision
93M	0407	ACC	6OL11	DWG	90137	A

-Drawing shall be updated according to the comments on the GA drawing.
-Approval is subjected to the approval of coordination package between multi-discipline.

REVIEWED WITH COMMENT
MONORAILS PROJECT

All holes are 22mm U.N.O Length & Area & Weight per piece

Mark	Profile	Grade	QTY	Length	Area	Weight
W31	FLT25*400	S355J2N	2	3870.0	3.31	303.8

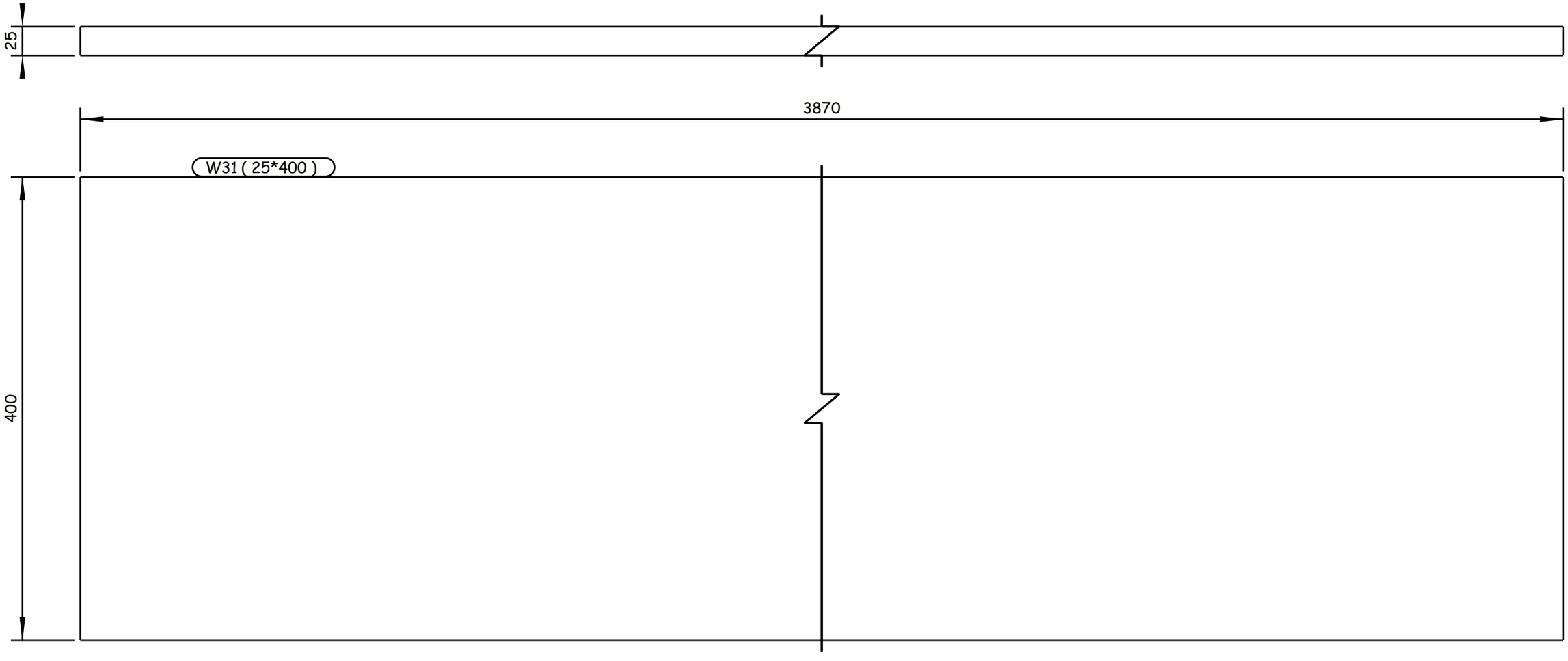

2 REQUIRED AS DRAWN E.SH W31

Tekla structures

GENERAL NOTES:

1. ALL DIMENSIONS ARE IN MILLIMETERS UNLESS OTHERWISE SPECIFIED.
2. LEVELS ARE IN METERS
3. DESIGN SERVICE LIFE OF 100 YEARS.
4. FLANGES OF TOP AND BOTTOM CHORDS TO BE SUPPLIED WITH IMPROVED THROUGH THICKNESS PROPERTIES Z25 ACCORDING TO EN10164.

REFERENCE DRAWINGS

1	93M-0407-SEN-6OL11-END-10118-B PAGE 01:17
2	
3	
4	
5	
6	
7	
8	
9	
10	
11	

6TH OF OCTOBER CITY RAIL TRANSIT MONORAIL &
NEW CAPITAL CITY RAIL TRANSIT MONORAIL

The Authority
Hill International
Authority Consultant

ORASCOM CONSTRUCTION
Main Contractor

BOMBARDIER
SENER
SHAKER CONSULTANCY GROUP
Designer

CONTRACTOR / CONSULTANT:
ENGINEERING HOUSE FOR CONSULTANCY

6 October Monorail
Engineering Unit
Valid For Construction

SCALE: AS SHOWN | CHK'D DRAWING | DATE: 20.11.2024

REV	DATE	BY	DESCRIPTION	CHK	APD
A	20-11-24	M.SH	ISSUE FOR APPROVAL	A.SH	M.M

DRAWING TITLE:
6TH OF OCTOBER MONORAIL
SHOP DRAWING FOR BRIDGE 6OL11-37
STEEL TRUSS (I).
W31

Project Code	Rubric	Initiator	Lot	Ref	Number	Revision
93M	0407	ACC	60L11	DWG	90138	A

-Drawing shall be updated according to the comments on the GA drawing.
-Approval is subjected to the approval of coordination package between multi-discipline.

REVIEWED WITH COMMENT
MONORAILS PROJECT

All holes are 22mm U.N.O Length & Area & Weight per piece

Mark	Profile	Grade	QTY	Length	Area	Weight
W32	PL20*548	S355J2N	4	768.2	0.89	65.9

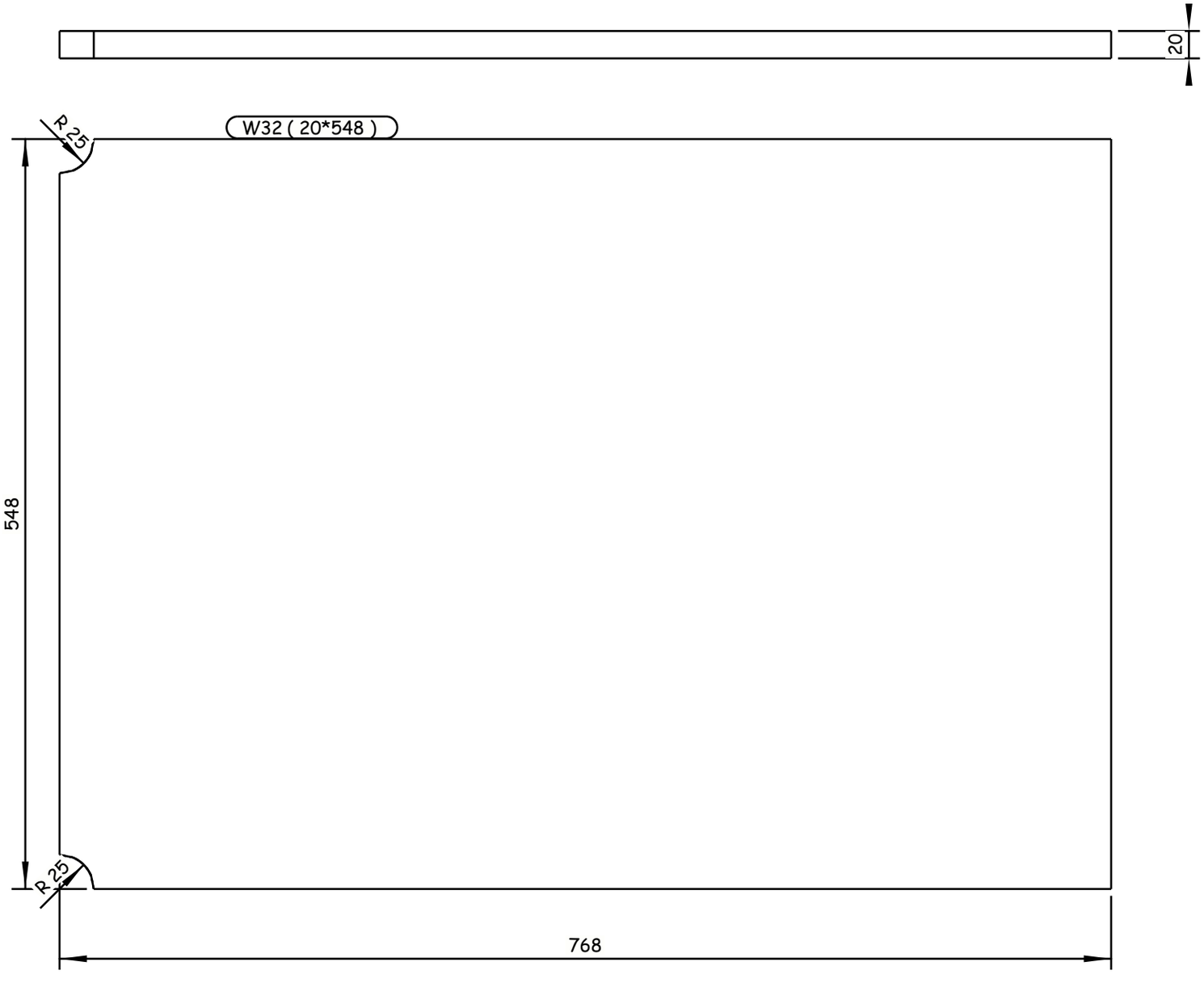

4 REQUIRED AS DRAWN E.SH W32

GENERAL NOTES:

1. ALL DIMENSIONS ARE IN MILLIMETERS UNLESS OTHERWISE SPECIFIED.
2. LEVELS ARE IN METERS
3. DESIGN SERVICE LIFE OF 100 YEARS.
4. FLANGES OF TOP AND BOTTOM CHORDS TO BE SUPPLIED WITH IMPROVED THROUGH THICKNESS PROPERTIES Z25 ACCORDING TO EN10164.

REFERENCE DRAWINGS

1	93M-0407-SEN-6OL11-END-10118-B PAGE 01:17
2	
3	
4	
5	
6	
7	
8	
9	
10	
11	

6TH OF OCTOBER CITY RAIL TRANSIT MONORAIL &
NEW CAPITAL CITY RAIL TRANSIT MONORAIL

The Authority
Hill International
Authority Consultant

Main Contractor

Designer

CONTRACTOR / CONSULTANT:
ENGINEERING HOUSE FOR CONSULTANCY

6 October Monorail
Engineering Unit
Valid For Construction

SCALE: AS SHOWN | CHK'D DRAWING | DATE: 20.11.2024

REV	DATE	BY	DESCRIPTION	CHK	APD
A	20-11-24	M.SH	ISSUE FOR APPROVAL	A.SH	M.M

DRAWING TITLE:
6TH OF OCTOBER MONORAIL
SHOP DRAWING FOR BRIDGE 6OL11-37
STEEL TRUSS (I).
W32

Project Code	Rubric	Initiator	Lot	Ref	Number	Revision
93M	0407	ACC	60L11	DWG	90139	A

Tekla structures

-Drawing shall be updated according to the comments on the GA drawing.
-Approval is subjected to the approval of coordination package between multi-discipline.

REVIEWED WITH COMMENT
MONORAILS PROJECT

All holes are 22mm U.N.O Length & Area & Weight per piece

Mark	Profile	Grade	QTY	Length	Area	Weight
W33	FLT25*200	S355J2N	16	1375.0	0.63	54.0

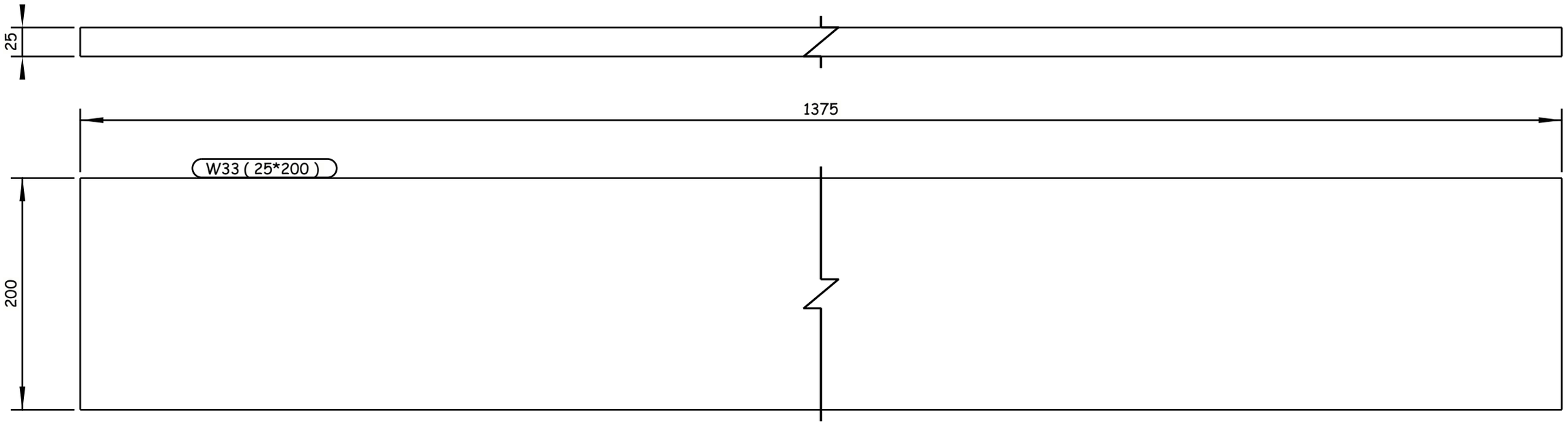

16 REQUIRED AS DRAWN E.SH W33

GENERAL NOTES:

1. ALL DIMENSIONS ARE IN MILLIMETERS UNLESS OTHERWISE SPECIFIED.
2. LEVELS ARE IN METERS
3. DESIGN SERVICE LIFE OF 100 YEARS.
4. FLANGES OF TOP AND BOTTOM CHORDS TO BE SUPPLIED WITH IMPROVED THROUGH THICKNESS PROPERTIES Z25 ACCORDING TO EN10164.

REFERENCE DRAWINGS

1	93M-0407-SEN-6OL11-END-10118-B PAGE 01:17
2	
3	
4	
5	
6	
7	
8	
9	
10	
11	

6TH OF OCTOBER CITY RAIL TRANSIT MONORAIL &
NEW CAPITAL CITY RAIL TRANSIT MONORAIL

The Authority
Hill International
Authority Consultant

ORASCOM CONSTRUCTION
Main Contractor

BOMBARDIER
SENER
SHAKER CONSULTANCY GROUP
Designer

CONTRACTOR / CONSULTANT:
ENGINEERING HOUSE FOR CONSULTANCY

SCALE: AS SHOWN | CHK'D DRAWING | DATE: 20.11.2024

REV	DATE	BY	DESCRIPTION	CHK	APD
A	20-11-24	M.SH	ISSUE FOR APPROVAL	A.SH	M.M

6 October Monorail
Engineering Unit
Valid For Construction

DRAWING TITLE:
6TH OF OCTOBER MONORAIL
SHOP DRAWING FOR BRIDGE 6OL11-37
STEEL TRUSS (I).
W33

Project Code	Rubric	Initiator	Lot	Ref	Number	Revision
93M	0407	ACC	60L11	DWG	90140	A

Tekla structures

-Drawing shall be updated according to the comments on the GA drawing.
-Approval is subjected to the approval of coordination package between multi-discipline.

REVIEWED WITH COMMENT
MONORAILS PROJECT

All holes are 22mm U.N.O Length & Area & Weight per piece

Mark	Profile	Grade	QTY	Length	Area	Weight
W34	FLT25*200	S355J2N	8	970.0	0.45	38.1

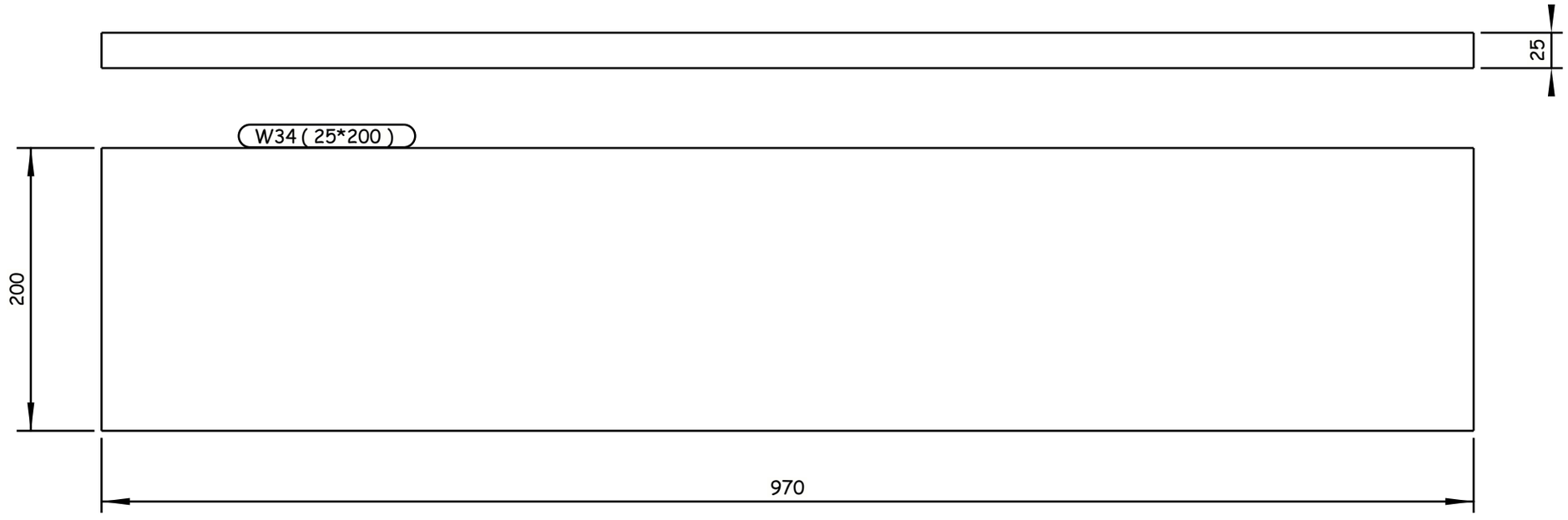

8 REQUIRED AS DRAWN E.SH W34

Tekla structures

GENERAL NOTES:

1. ALL DIMENSIONS ARE IN MILLIMETERS UNLESS OTHERWISE SPECIFIED.
2. LEVELS ARE IN METERS
3. DESIGN SERVICE LIFE OF 100 YEARS.
4. FLANGES OF TOP AND BOTTOM CHORDS TO BE SUPPLIED WITH IMPROVED THROUGH THICKNESS PROPERTIES Z25 ACCORDING TO EN10164.

REFERENCE DRAWINGS

1	93M-0407-SEN-6OL11-END-10118-B PAGE 01:17
2	
3	
4	
5	
6	
7	
8	
9	
10	
11	

6TH OF OCTOBER CITY RAIL TRANSIT MONORAIL &
NEW CAPITAL CITY RAIL TRANSIT MONORAIL

The Authority
Hill International
Authority Consultant
ORASCOM CONSTRUCTION
Main Contractor
BOMBARDIER
SENER
SHAKER CONSULTANCY GROUP
Designer

CONTRACTOR / CONSULTANT:
ENGINEERING HOUSE FOR CONSULTANCY

6 October Monorail
Engineering Unit
Valid For Construction

SCALE	SHOP DRAWING	DATE
AS SHOWN		20.11.2024

REV	DATE	BY	DESCRIPTION	CHK	APD
A	20-11-24	M.SH	ISSUE FOR APPROVAL	A.SH	M.M

DRAWING TITLE:
6TH OF OCTOBER MONORAIL
SHOP DRAWING FOR BRIDGE 6OL11-37
STEEL TRUSS (I).
W34

Project Code	Rubric	Initiator	Lot	Ref	Number	Revision
93M	0407	ACC	60L11	DWG	90141	A

-Drawing shall be updated according to the comments on the GA drawing.
-Approval is subjected to the approval of coordination package between multi-discipline.

REVIEWED WITH COMMENT
MONORAILS PROJECT

All holes are 22mm U.N.O Length & Area & Weight per piece

Mark	Profile	Grade	QTY	Length	Area	Weight
W35	FLT25*400	S355J2N	2	3400.0	2.91	266.9

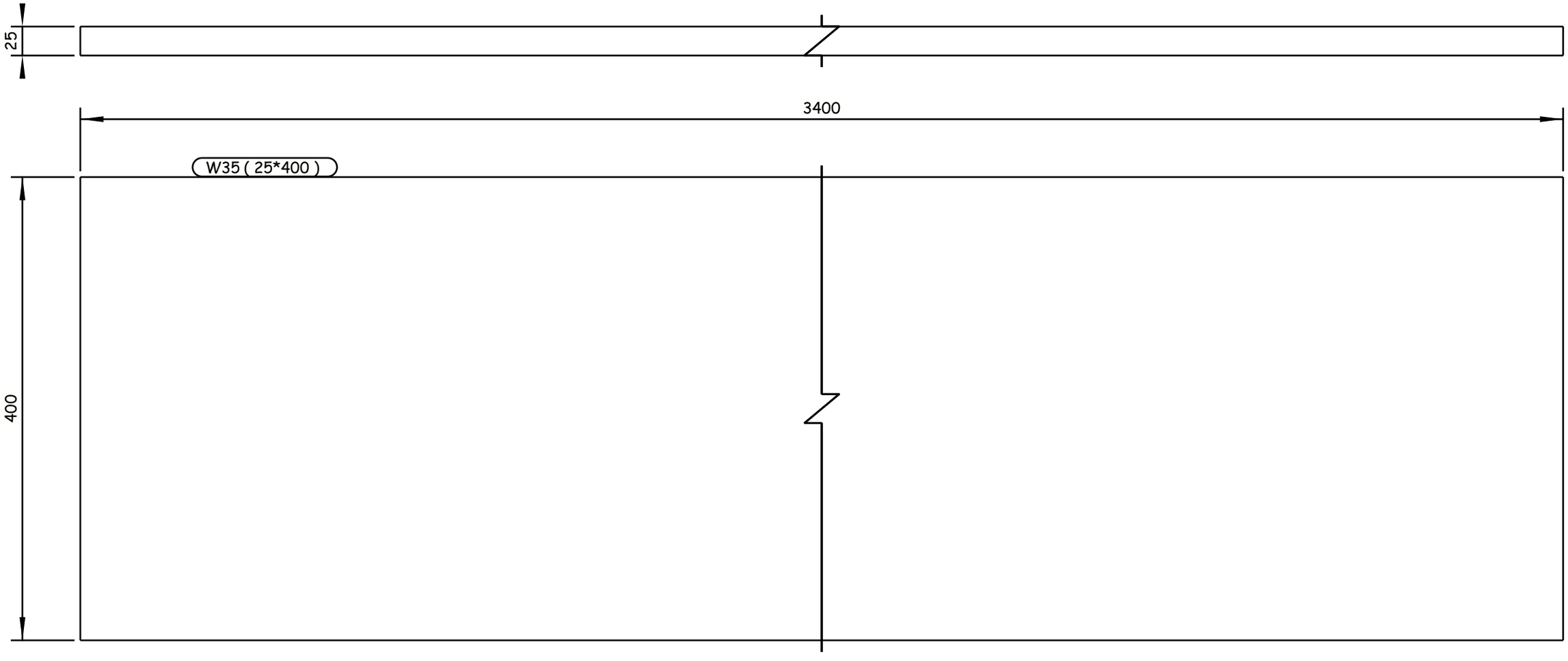

2 REQUIRED AS DRAWN E.SH W35

GENERAL NOTES:

1. ALL DIMENSIONS ARE IN MILLIMETERS UNLESS OTHERWISE SPECIFIED.
2. LEVELS ARE IN METERS
3. DESIGN SERVICE LIFE OF 100 YEARS.
4. FLANGES OF TOP AND BOTTOM CHORDS TO BE SUPPLIED WITH IMPROVED THROUGH THICKNESS PROPERTIES Z25 ACCORDING TO EN10164.

REFERENCE DRAWINGS

1	93M-0407-SEN-6OL11-END-10118-B PAGE 01:17
2	
3	
4	
5	
6	
7	
8	
9	
10	
11	

6TH OF OCTOBER CITY RAIL TRANSIT MONORAIL &
NEW CAPITAL CITY RAIL TRANSIT MONORAIL

The Authority
Hill International
Authority Consultant

Main Contractor

Designer

CONTRACTOR & CONSULTANT:

ENGINEERING HOUSE FOR CONSULTANCY

6 October Monorail
Engineering Unit
Valid For Construction

SCALE: AS SHOWN | CHK'D DRAWING | DATE: 20.11.2024

REV	DATE	BY	DESCRIPTION	CHK	APD
A	20-11-24	M.SH	ISSUE FOR APPROVAL	A.SH	M.M

DRAWING TITLE:
6TH OF OCTOBER MONORAIL
SHOP DRAWING FOR BRIDGE 6OL11-37
STEEL TRUSS (I).
W35

Project Code	Rubric	Initiator	Lot	Ref	Number	Revision
93M	0407	ACC	60L11	DWG	90142	A

Tekla structures

-Drawing shall be updated according to the comments on the GA drawing.
-Approval is subjected to the approval of coordination package between multi-discipline.

REVIEWED WITH COMMENT
MONORAILS PROJECT

All holes are 22mm U.N.O Length & Area & Weight per piece						
W36	PL25*2150	S355J2N	2	4765.0	20.78	2001.3
Mark	Profile	Grade	QTY	Length	Area	Weight

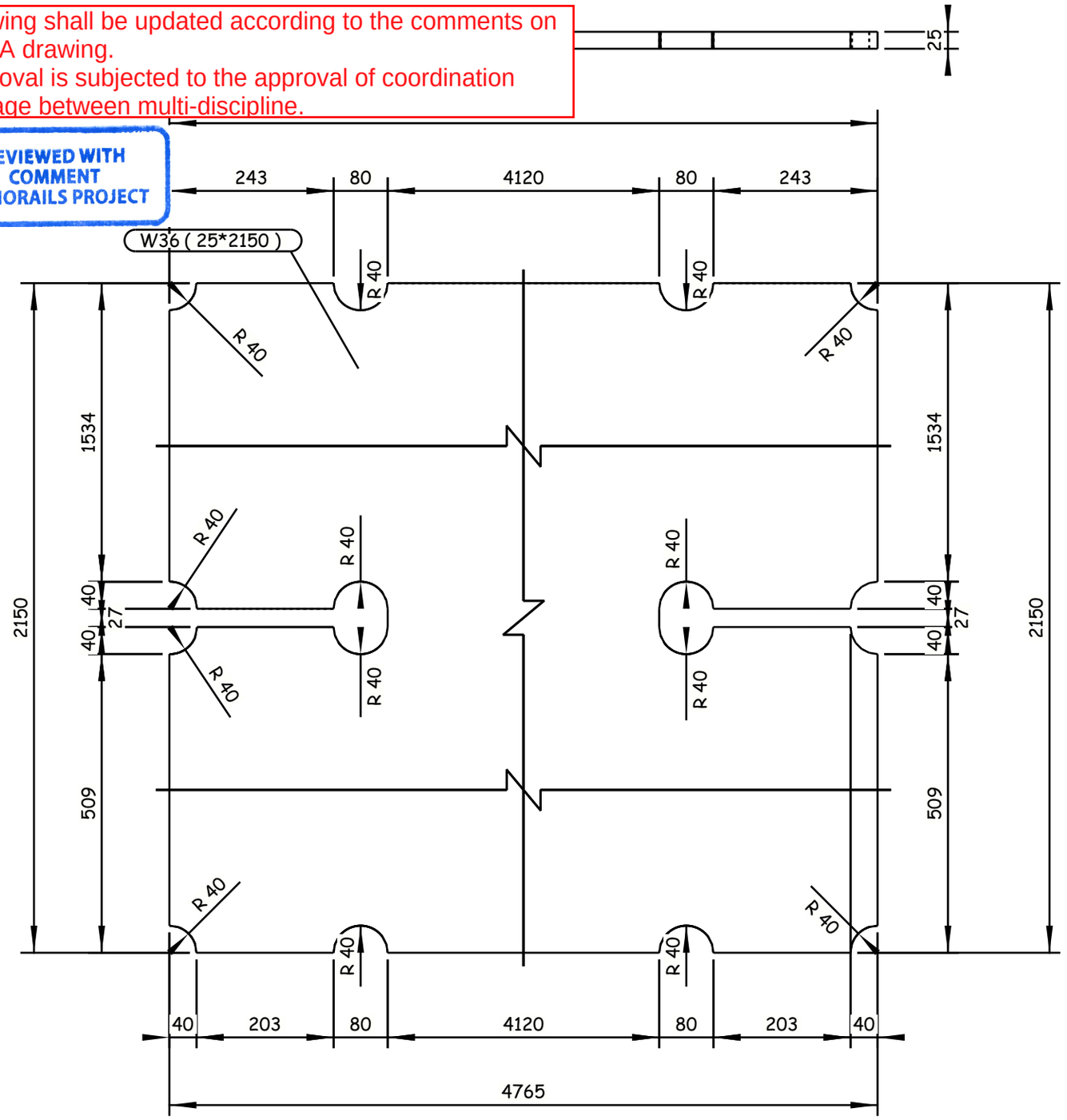

2 REQUIRED AS DRAWN E.SH W36

GENERAL NOTES:

1. ALL DIMENSIONS ARE IN MILLIMETERS UNLESS OTHERWISE SPECIFIED.
2. LEVELS ARE IN METERS
3. DESIGN SERVICE LIFE OF 100 YEARS.
4. FLANGES OF TOP AND BOTTOM CHORDS TO BE SUPPLIED WITH IMPROVED THROUGH THICKNESS PROPERTIES Z25 ACCORDING TO EN10164.

REFERENCE DRAWINGS

1	93M-0407-SEN-6OL11-END-10118-B PAGE 01:17
2	
3	
4	
5	
6	
7	
8	
9	
10	
11	

6TH OF OCTOBER CITY RAIL TRANSIT MONORAIL &
NEW CAPITAL CITY RAIL TRANSIT MONORAIL

The Authority — Hill International Authority Consultant | Main Contractor | Designer

CONTRACTOR / CONSULTANT:
ENGINEERING HOUSE FOR CONSULTANCY

6 October Monorail
Engineering Unit
Valid For Construction

SCALE: AS SHOWN | CHD DRAWING | DATE: 20.11.2024

DRAWING TITLE:
6TH OF OCTOBER MONORAIL
SHOP DRAWING FOR BRIDGE 6OL11-37
STEEL TRUSS (I).
W36

REV	DATE	BY	DESCRIPTION	CHK	APD
A	20-11-24	M.SH	ISSUE FOR APPROVAL	A.SH	M.M

Project Code	Rubric	Initiator	Lot	Ref	Number	Revision
93M	0407	ACC	60L11	DWG	90143	A

Tekla structures

-Drawing shall be updated according to the comments on the GA drawing.
-Approval is subjected to the approval of coordination package between multi-discipline.

REVIEWED WITH COMMENT
MONORAILS PROJECT

All holes are 22mm U.N.O Length & Area & Weight per piece

Mark	Profile	Grade	QTY	Length	Area	Weight
W37	FLT50*300	S355***	4	300.0	0.18	0.0

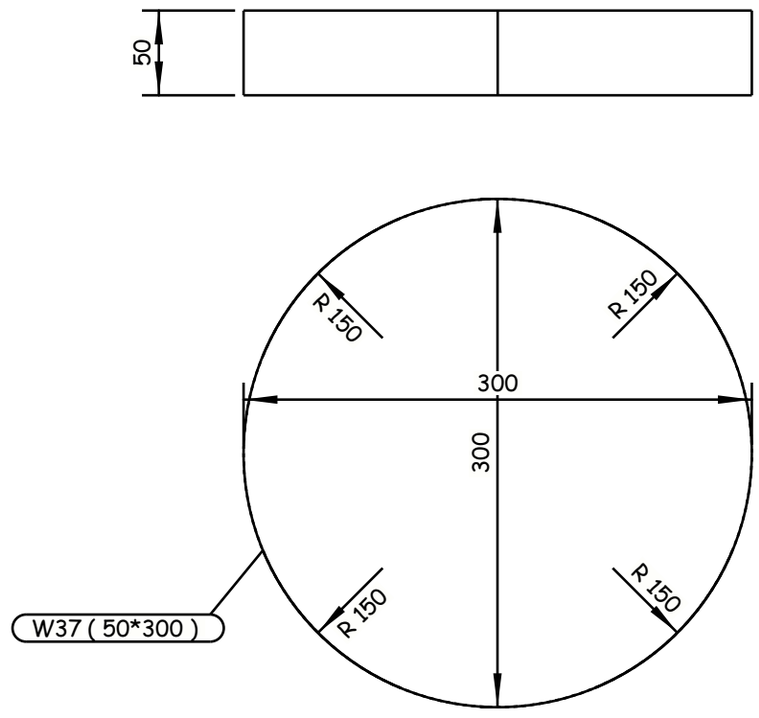

4 REQUIRED AS DRAWN E.SH W37

Tekla structures

GENERAL NOTES:

1. ALL DIMENSIONS ARE IN MILLIMETERS UNLESS OTHERWISE SPECIFIED.
2. LEVELS ARE IN METERS
3. DESIGN SERVICE LIFE OF 100 YEARS.
4. FLANGES OF TOP AND BOTTOM CHORDS TO BE SUPPLIED WITH IMPROVED THROUGH THICKNESS PROPERTIES Z25 ACCORDING TO EN10164.

REFERENCE DRAWINGS

1	93M-0407-SEN-6OL11-END-10118-B PAGE 01:17
2	
3	
4	
5	
6	
7	
8	
9	
10	
11	

6TH OF OCTOBER CITY RAIL TRANSIT MONORAIL &
NEW CAPITAL CITY RAIL TRANSIT MONORAIL

The Authority | Hill International Authority Consultant | ORASCOM CONSTRUCTION | BOMBARDIER | Main Contractor | SENER | SHAKER CONSULTANCY GROUP | Designer

CONTRACTOR
CONSULTANT :

ENGINEERING HOUSE FOR CONSULTANCY

6 October Monorail
Engineering Unit
Valid For Construction

SCALE	SHOP DRAWING	DATE
AS SHOWN		20.11.2024

DRAWING TITLE:
6TH OF OCTOBER MONORAIL
SHOP DRAWING FOR BRIDGE 6OL11-37
STEEL TRUSS (I).
W37

REV	DATE	BY	DESCRIPTION	CHK	APD
A	20-11-24	M.SH	ISSUE FOR APPROVAL	A.SH	M.M

Project Code	Rubric	Initiator	Lot	Ref	Number	Revision
93M	0407	ACC	60L11	DWG	90144	A

-Drawing shall be updated according to the comments on the GA drawing.
-Approval is subjected to the approval of coordination package between multi-discipline.

REVIEWED WITH COMMENT
MONORAILS PROJECT

All holes are 22mm U.N.O Length & Area & Weight per piece

Mark	Profile	Grade	QTY	Length	Area	Weight
W38	PL15*196.8	S355J2N	2	254.3	0.09	4.7

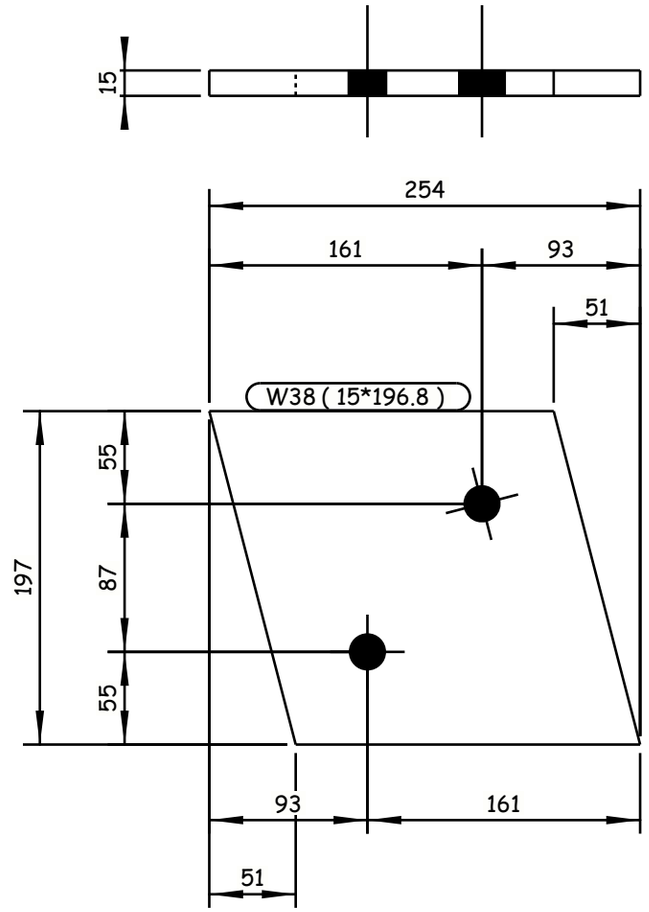

2 REQUIRED AS DRAWN E.SH W38

Tekla structures

GENERAL NOTES:
1. ALL DIMENSIONS ARE IN MILLIMETERS UNLESS OTHERWISE SPECIFIED.
2. LEVELS ARE IN METERS
3. DESIGN SERVICE LIFE OF 100 YEARS.
4. FLANGES OF TOP AND BOTTOM CHORDS TO BE SUPPLIED WITH IMPROVED THROUGH THICKNESS PROPERTIES Z25 ACCORDING TO EN10164.

REFERENCE DRAWINGS

1	93M-0407-SEN-6OL11-END-10118-B PAGE 01:17
2	
3	
4	
5	
6	
7	
8	
9	
10	
11	

6TH OF OCTOBER CITY RAIL TRANSIT MONORAIL &
NEW CAPITAL CITY RAIL TRANSIT MONORAIL

The Authority — Authority Consultant
Hill International
ORASCOM CONSTRUCTION — BOMBARDIER — Main Contractor
SENER — SHAKER CONSULTANCY GROUP — Designer

CONTRACTOR & CONSULTANT:
ENGINEERING HOUSE FOR CONSULTANCY

6 October Monorail
Engineering Unit
Valid For Construction

SCALE: AS SHOWN | CHK'D DRAWING | DATE: 20.11.2024

DRAWING TITLE:
6TH OF OCTOBER MONORAIL
SHOP DRAWING FOR BRIDGE 6OL11-37
STEEL TRUSS (I).
W38

REV	DATE	BY	DESCRIPTION	CHK	APD
A	20-11-24	M.SH	ISSUE FOR APPROVAL	A.SH	M.M

Project Code	Rubric	Initiator	Lot	Ref	Number	Revision
93M	0407	ACC	60L11	DWG	90145	A

-Drawing shall be updated according to the comments on the GA drawing.
-Approval is subjected to the approval of coordination package between multi-discipline.

REVIEWED WITH COMMENT
MONORAILS PROJECT

All holes are 22mm U.N.O Length & Area & Weight per piece

Mark	Profile	Grade	QTY	Length	Area	Weight
W39	PL15*342.5	S235	2	735.0	0.51	28.5

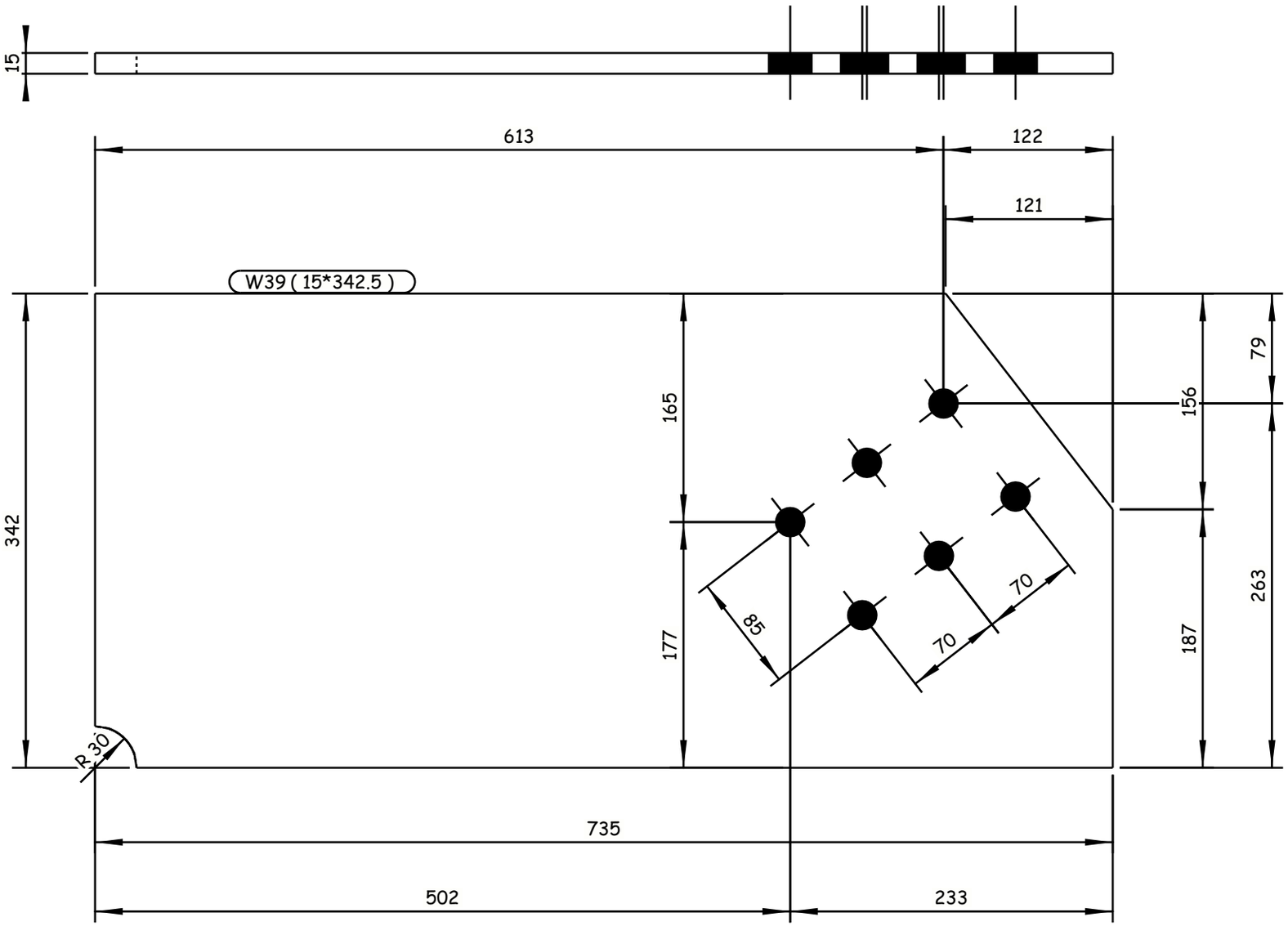

2 REQUIRED AS DRAWN E.SH W39

Tekla structures

GENERAL NOTES:

1. ALL DIMENSIONS ARE IN MILLIMETERS UNLESS OTHERWISE SPECIFIED.
2. LEVELS ARE IN METERS
3. DESIGN SERVICE LIFE OF 100 YEARS.
4. FLANGES OF TOP AND BOTTOM CHORDS TO BE SUPPLIED WITH IMPROVED THROUGH THICKNESS PROPERTIES Z25 ACCORDING TO EN10164.

REFERENCE DRAWINGS

1	93M-0407-SEN-6OL11-END-10118-B PAGE 01:17
2	
3	
4	
5	
6	
7	
8	
9	
10	
11	

6TH OF OCTOBER CITY RAIL TRANSIT MONORAIL &
NEW CAPITAL CITY RAIL TRANSIT MONORAIL

The Authority
Hill International
Authority Consultant

Main Contractor

Designer

CONTRACTOR / CONSULTANT :
ENGINEERING HOUSE FOR CONSULTANCY

SCALE: AS SHOWN | SHD/DRAWING | DATE: 20.11.2024

DRAWING TITLE:
6TH OF OCTOBER MONORAIL
SHOP DRAWING FOR BRIDGE 6OL11-37
STEEL TRUSS (I).
W39

REV	DATE	BY	DESCRIPTION	CHK	APD
A	20-11-24	M.SH	ISSUE FOR APPROVAL	A.SH	M.M

Project Code	Rubric	Initiator	Lot	Ref	Number	Revision
93M	0407	ACC	60L11	DWG	90146	A

6 October Monorail
Engineering Unit
Valid For Construction

-Drawing shall be updated according to the comments on the GA drawing.
-Approval is subjected to the approval of coordination package between multi-discipline.

REVIEWED WITH COMMENT
MONORAILS PROJECT

All holes are 22mm U.N.O Length & Area & Weight per piece

Mark	Profile	Grade	QTY	Length	Area	Weight
W40	PL15*342.5	S235	2	735.0	0.51	28.2

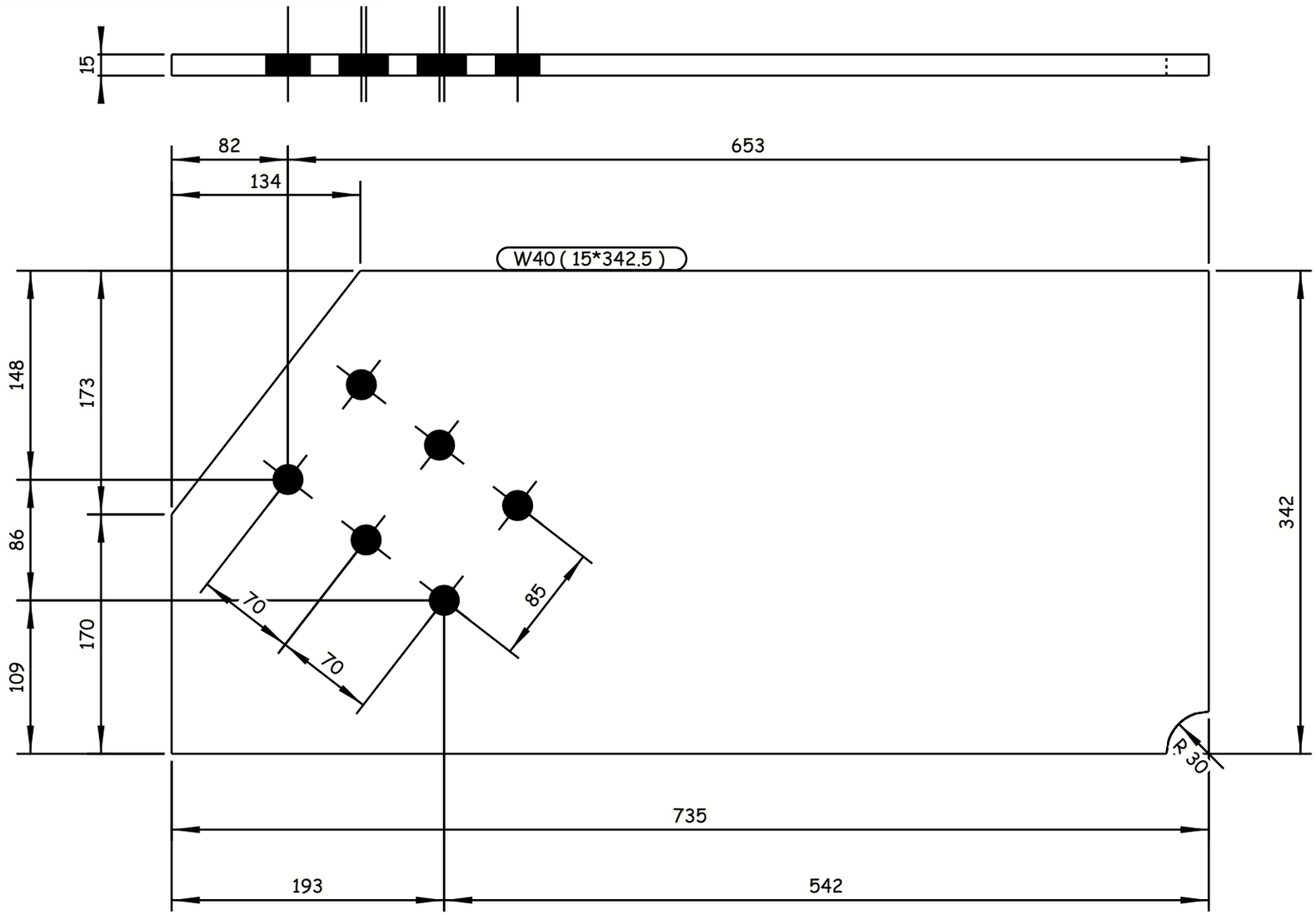

2 REQUIRED AS DRAWN E.SH W40

GENERAL NOTES:

1. ALL DIMENSIONS ARE IN MILLIMETERS UNLESS OTHERWISE SPECIFIED.
2. LEVELS ARE IN METERS
3. DESIGN SERVICE LIFE OF 100 YEARS.
4. FLANGES OF TOP AND BOTTOM CHORDS TO BE SUPPLIED WITH IMPROVED THROUGH THICKNESS PROPERTIES Z25 ACCORDING TO EN10164.

REFERENCE DRAWINGS

1	93M-0407-SEN-6OL11-END-10118-B PAGE 01:17
2	
3	
4	
5	
6	
7	
8	
9	
10	
11	

6TH OF OCTOBER CITY RAIL TRANSIT MONORAIL &
NEW CAPITAL CITY RAIL TRANSIT MONORAIL

The Authority
Hill International
Authority Consultant

Main Contractor

Designer

CONTRACTOR/ CONSULTANT:
ENGINEERING HOUSE FOR CONSULTANCY

6 October Monorail
Engineering Unit
Valid For Construction

SCALE	SHOP DRAWING	DATE
AS SHOWN		20.11.2024

REV	DATE	BY	DESCRIPTION	CHK	APD
A	20-11-24	M.SH	ISSUE FOR APPROVAL	A.SH	M.M

DRAWING TITLE:
6TH OF OCTOBER MONORAIL
SHOP DRAWING FOR BRIDGE 6OL11-37
STEEL TRUSS (I).
W40

Project Code	Rubric	Initiator	Lot	Ref	Number	Revision
93M	0407	ACC	60L11	DWG	90147	A

Tekla structures

-Drawing shall be updated according to the comments on the GA drawing.
-Approval is subjected to the approval of coordination package between multi-discipline.

REVIEWED WITH COMMENT
MONORAILS PROJECT

All holes are 22mm U.N.O Length & Area & Weight per piece

Mark	Profile	Grade	QTY	Length	Area	Weight
W41	PL15*342.5	S235	2	735.0	0.51	28.5

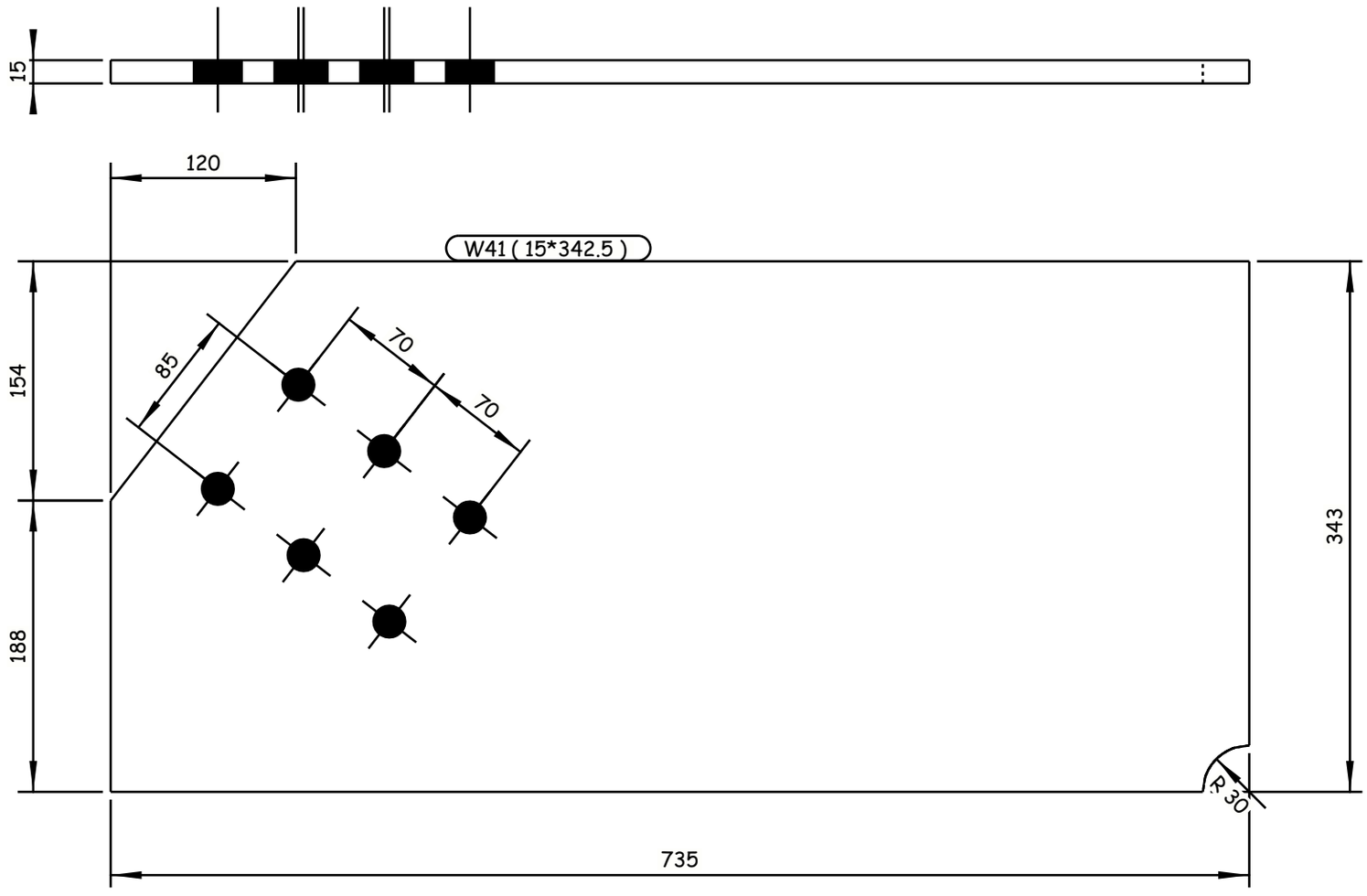

2 REQUIRED AS DRAWN E.SH W41

Tekla structures

GENERAL NOTES:

1. ALL DIMENSIONS ARE IN MILLIMETERS UNLESS OTHERWISE SPECIFIED.
2. LEVELS ARE IN METERS
3. DESIGN SERVICE LIFE OF 100 YEARS.
4. FLANGES OF TOP AND BOTTOM CHORDS TO BE SUPPLIED WITH IMPROVED THROUGH THICKNESS PROPERTIES Z25 ACCORDING TO EN10164.

REFERENCE DRAWINGS

1	93M-0407-SEN-6OL11-END-10118-B PAGE 01:17
2	
3	
4	
5	
6	
7	
8	
9	
10	
11	

6TH OF OCTOBER CITY RAIL TRANSIT MONORAIL &
NEW CAPITAL CITY RAIL TRANSIT MONORAIL

The Authority
Hill International
Authority Consultant

ORASCOM CONSTRUCTION
BOMBARDIER
Main Contractor

SENER
SHAKER CONSULTANCY GROUP
Designer

CONTRACTOR / CONSULTANT:
ENGINEERING HOUSE FOR CONSULTANCY

6 October Monorail
Engineering Unit
Valid For Construction

SCALE	SHOP DRAWING	DATE
AS SHOWN		20.11.2024

REV	DATE	BY	DESCRIPTION	CHK	APD
A	20-11-24	M.SH	ISSUE FOR APPROVAL	A.SH	M.M

DRAWING TITLE:
6TH OF OCTOBER MONORAIL
SHOP DRAWING FOR BRIDGE 6OL11-37
STEEL TRUSS (I).
W41

Project Code	Rubric	Initiator	Lot	Ref	Number	Revision
93M	0407	ACC	6OL11	DWG	90148	A

-Drawing shall be updated according to the comments on the GA drawing.
-Approval is subjected to the approval of coordination package between multi-discipline.

REVIEWED WITH COMMENT
MONORAILS PROJECT

All holes are 22mm U.N.O Length & Area & Weight per piece

Mark	Profile	Grade	QTY	Length	Area	Weight
W42	PL15*342.5	S235	2	735.0	0.51	28.3

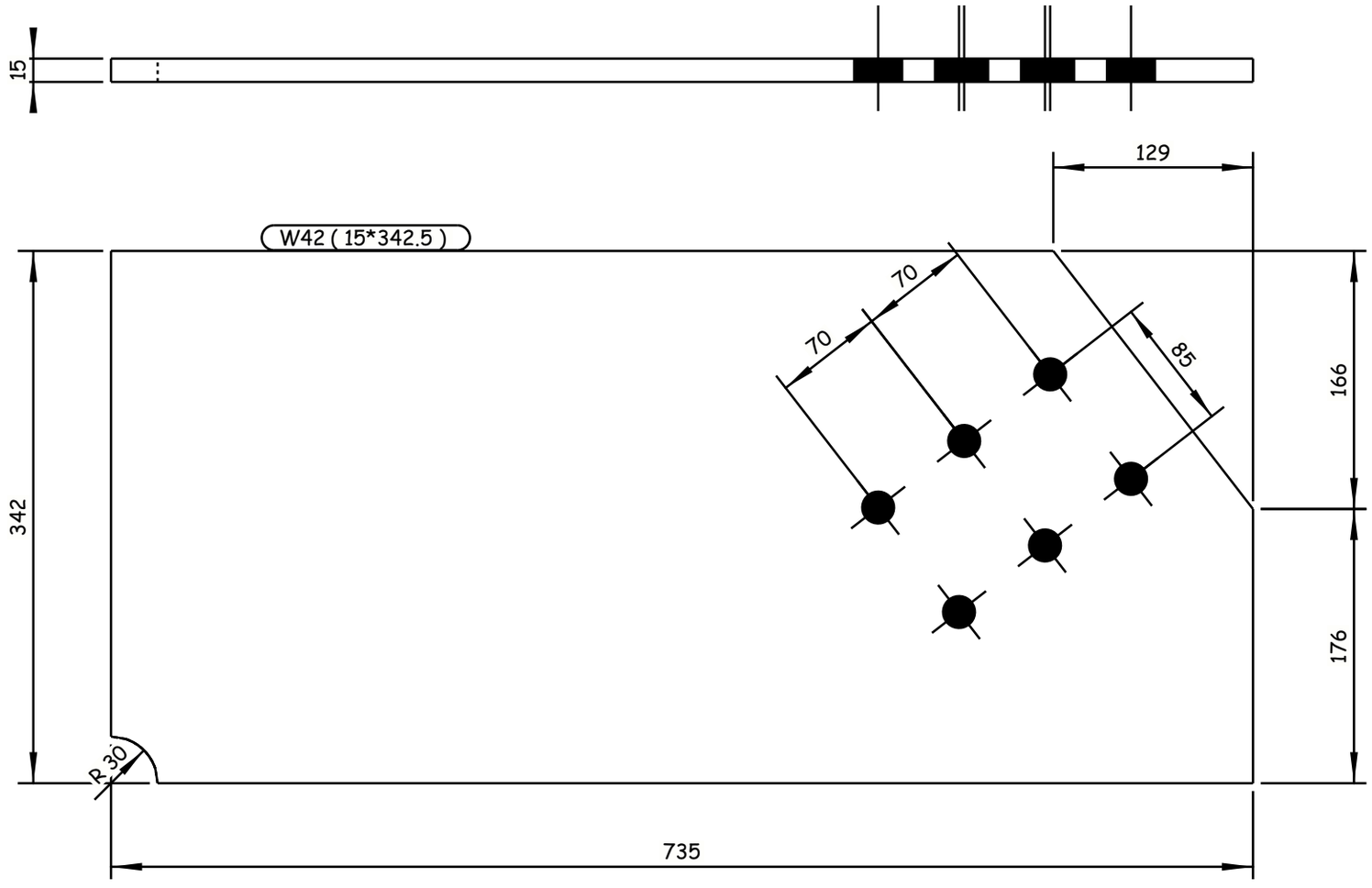

2 REQUIRED AS DRAWN E.SH W42

Tekla structures

GENERAL NOTES:

1. ALL DIMENSIONS ARE IN MILLIMETERS UNLESS OTHERWISE SPECIFIED.
2. LEVELS ARE IN METERS
3. DESIGN SERVICE LIFE OF 100 YEARS.
4. FLANGES OF TOP AND BOTTOM CHORDS TO BE SUPPLIED WITH IMPROVED THROUGH THICKNESS PROPERTIES Z25 ACCORDING TO EN10164.

REFERENCE DRAWINGS

1	93M-0407-SEN-6OL11-END-10118-B PAGE 01:17
2	
3	
4	
5	
6	
7	
8	
9	
10	
11	

6TH OF OCTOBER CITY RAIL TRANSIT MONORAIL &
NEW CAPITAL CITY RAIL TRANSIT MONORAIL

The Authority
Hill International
Authority Consultant
ORASCOM CONSTRUCTION
BOMBARDIER
Main Contractor
SENER
SHAKER CONSULTING GROUP
Designer

CONTRACTOR & CONSULTANT :
ENGINEERING HOUSE FOR CONSULTANCY

6 October Monorail
Engineering Unit
Valid For Construction

SCALE	SHOP DRAWING	DATE
AS SHOWN		20.11.2024

REV	DATE	BY	DESCRIPTION	CHK	APD
A	20-11-24	M.SH	ISSUE FOR APPROVAL	A.SH	M.M

DRAWING TITLE:
6TH OF OCTOBER MONORAIL
SHOP DRAWING FOR BRIDGE 6OL11-37
STEEL TRUSS (I).
W42

Project Code	Rubric	Initiator	Lot	Ref	Number	Revision
93M	0407	ACC	6OL11	DWG	90149	A

-Drawing shall be updated according to the comments on the GA drawing.
-Approval is subjected to the approval of coordination package between multi-discipline.

REVIEWED WITH COMMENT
MONORAILS PROJECT

All holes are 22mm U.N.O Length & Area & Weight per piece

Mark	Profile	Grade	QTY	Length	Area	Weight
W43	PL15*342.5	S235	4	735.0	0.51	28.3

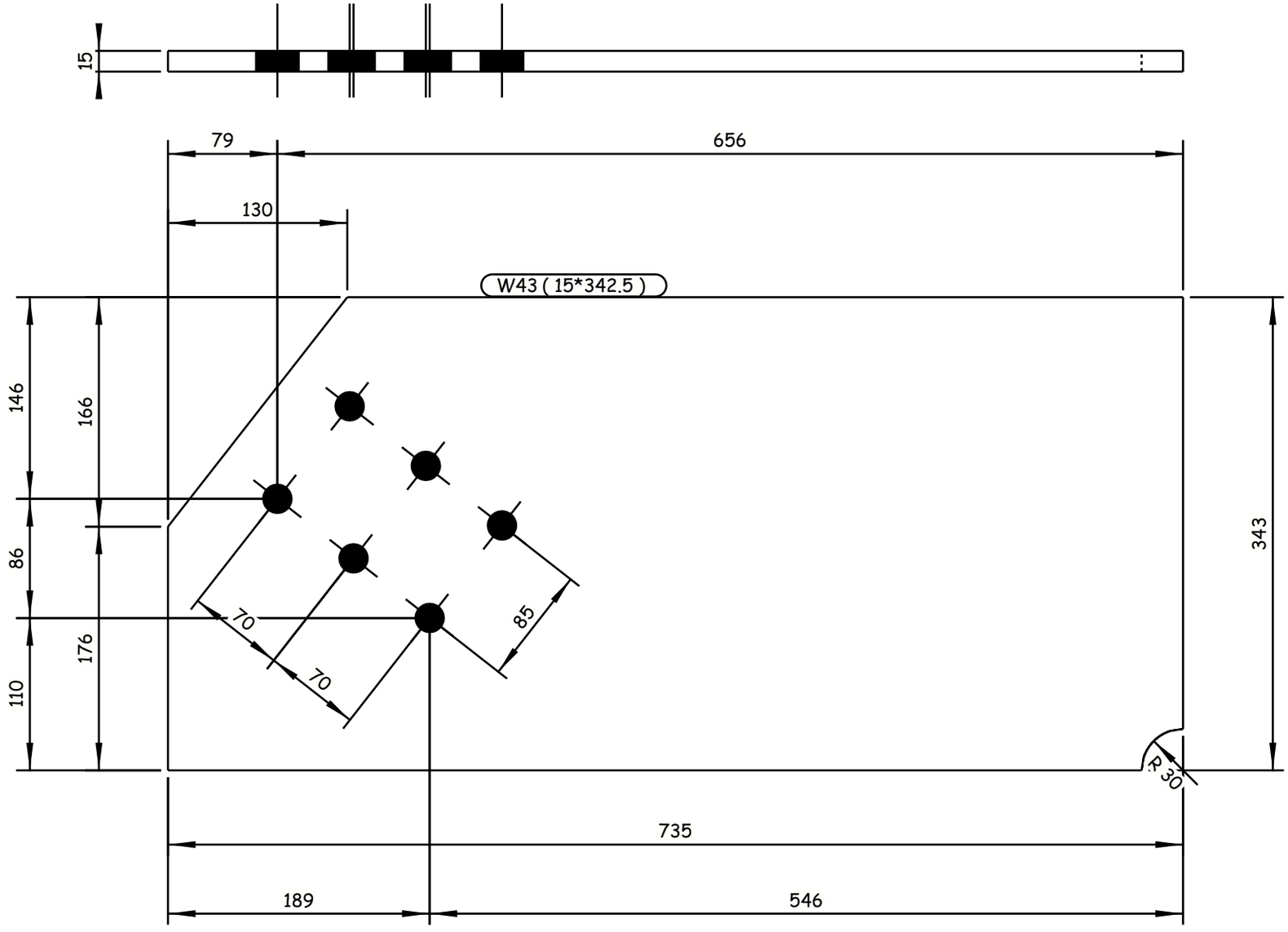

4 REQUIRED AS DRAWN E.SH W43

GENERAL NOTES:

1. ALL DIMENSIONS ARE IN MILLIMETERS UNLESS OTHERWISE SPECIFIED.
2. LEVELS ARE IN METERS
3. DESIGN SERVICE LIFE OF 100 YEARS.
4. FLANGES OF TOP AND BOTTOM CHORDS TO BE SUPPLIED WITH IMPROVED THROUGH THICKNESS PROPERTIES Z25 ACCORDING TO EN10164.

REFERENCE DRAWINGS

1	93M-0407-SEN-6OL11-END-10118-B PAGE 01:17
2	
3	
4	
5	
6	
7	
8	
9	
10	
11	

6TH OF OCTOBER CITY RAIL TRANSIT MONORAIL &
NEW CAPITAL CITY RAIL TRANSIT MONORAIL

The Authority | Hill International Authority Consultant | ORASCOM CONSTRUCTION | BOMBARDIER | Main Contractor | SENER | SHAKER CONSULTANCY GROUP | Designer

CONTRACTOR & CONSULTANT:
ENGINEERING HOUSE FOR CONSULTANCY

6 October Monorail
Engineering Unit
Valid For Construction

SCALE	SHD DRAWING	DATE
AS SHOWN		20.11.2024

REV	DATE	BY	DESCRIPTION	CHK	APD
A	20-11-24	M.SH	ISSUE FOR APPROVAL	A.SH	M.M

DRAWING TITLE:
6TH OF OCTOBER MONORAIL
SHOP DRAWING FOR BRIDGE 6OL11-37
STEEL TRUSS (I).
W43

Project Code	Rubric	Initiator	Lot	Ref	Number	Revision
93M	0407	ACC	60L11	DWG	90150	A

Tekla structures

-Drawing shall be updated according to the comments on the GA drawing.
-Approval is subjected to the approval of coordination package between multi-discipline.

REVIEWED WITH COMMENT
MONORAILS PROJECT

All holes are 22mm U.N.O Length & Area & Weight per piece

Mark	Profile	Grade	QTY	Length	Area	Weight
WEB1	PL12*360	S355J2N	2	4765.0	3.51	159.6

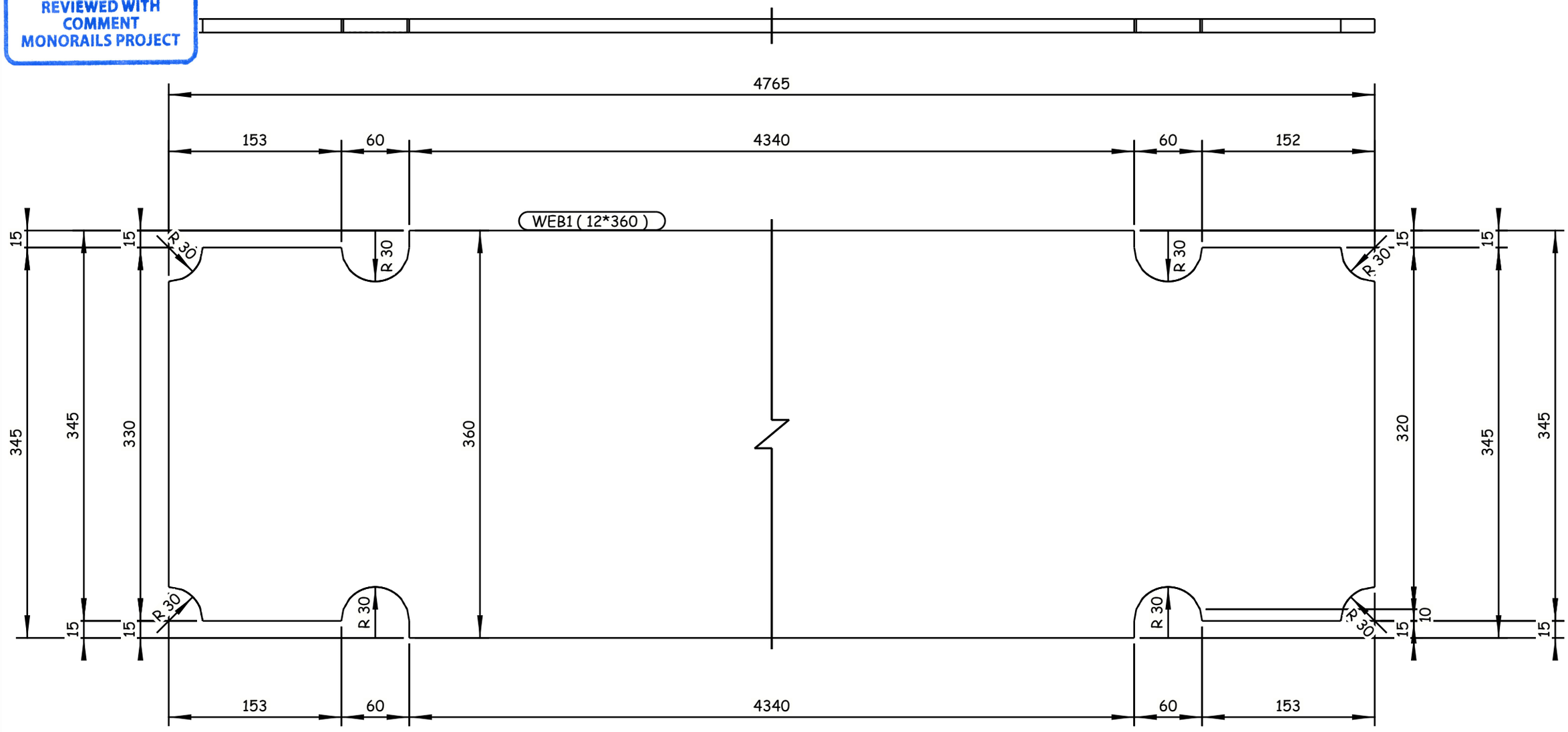

2 REQUIRED AS DRAWN E.SH WEB1

6 October Monorail
Engineering Unit
Valid For Construction

GENERAL NOTES:
1. ALL DIMENSIONS ARE IN MILLIMETERS UNLESS OTHERWISE SPECIFIED.
2. LEVELS ARE IN METERS
3. DESIGN SERVICE LIFE OF 100 YEARS.
4. FLANGES OF TOP AND BOTTOM CHORDS TO BE SUPPLIED WITH IMPROVED THROUGH THICKNESS PROPERTIES Z25 ACCORDING TO EN10164.

REFERENCE DRAWINGS

1	93M-0407-SEN-6OL11-END-10118-B PAGE 01:17
2	
3	
4	
5	
6	
7	
8	
9	
10	
11	

6TH OF OCTOBER CITY RAIL TRANSIT MONORAIL &
NEW CAPITAL CITY RAIL TRANSIT MONORAIL

The Authority
Hill International
Authority Consultant
Main Contractor
Designer

CONTRACTOR & CONSULTANT:
ENGINEERING HOUSE FOR CONSULTANCY

SCALE: AS SHOWN | SHOP DRAWING | DATE: 20.11.2024

DRAWING TITLE:
6TH OF OCTOBER MONORAIL
SHOP DRAWING FOR BRIDGE 6OL11-37
STEEL TRUSS (I).
WEB1

REV	DATE	BY	DESCRIPTION	CHK	APD
A	20-11-24	M.SH	ISSUE FOR APPROVAL	A.SH	M.M

Project Code	Rubric	Initiator	Lot	Ref	Number	Revision
93M	0407	ACC	6OL11	DWG	90151	A

Tekla structures

-Drawing shall be updated according to the comments on the GA drawing.
-Approval is subjected to the approval of coordination package between multi-discipline.

REVIEWED WITH COMMENT
MONORAILS PROJECT

All holes are 22mm U.N.O Length & Area & Weight per piece

Mark	Profile	Grade	QTY	Length	Area	Weight
WP1	PL20*520	S355J2N	4	2017.6	2.20	164.6

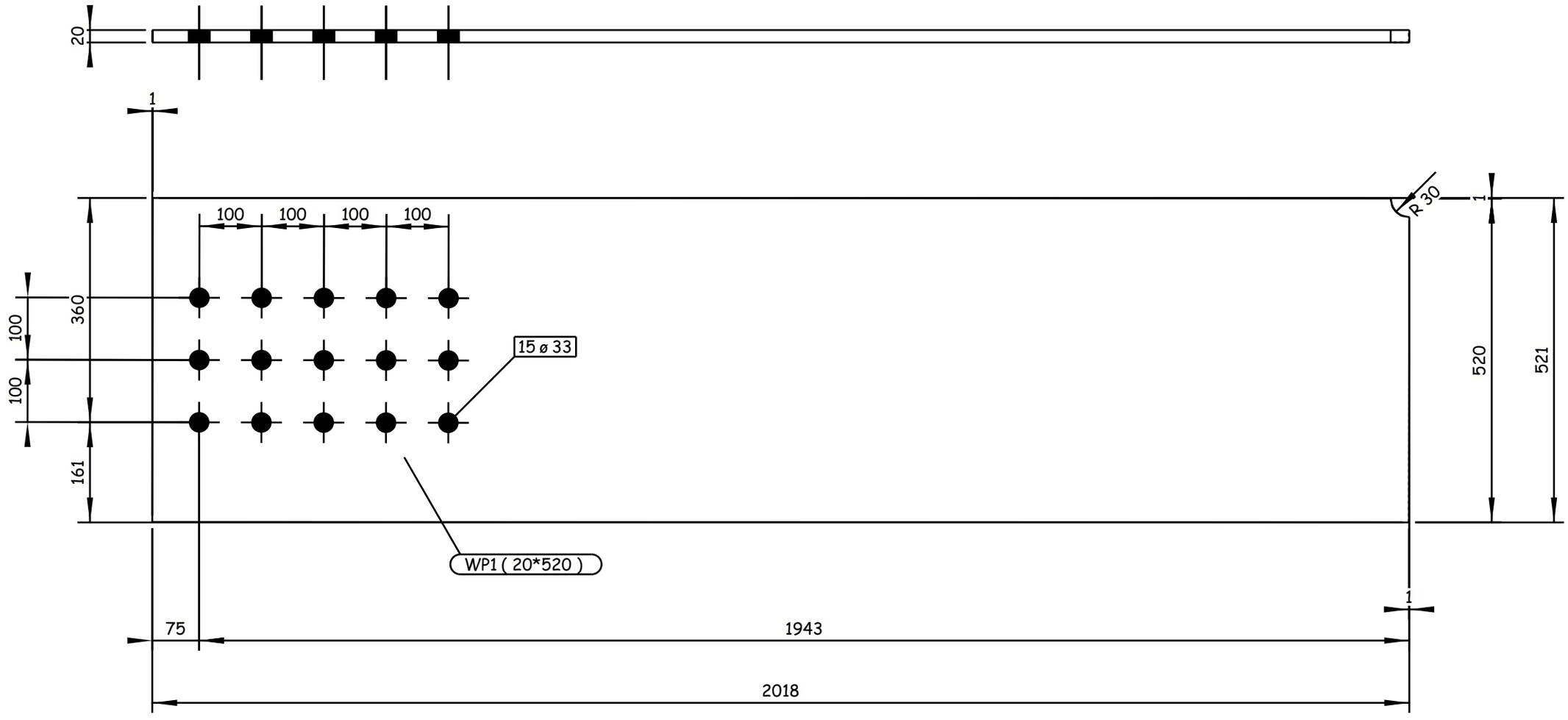

4 REQUIRED AS DRAWN E.SH WP1

Tekla structures

GENERAL NOTES:

1. ALL DIMENSIONS ARE IN MILLIMETERS UNLESS OTHERWISE SPECIFIED.
2. LEVELS ARE IN METERS
3. DESIGN SERVICE LIFE OF 100 YEARS.
4. FLANGES OF TOP AND BOTTOM CHORDS TO BE SUPPLIED WITH IMPROVED THROUGH THICKNESS PROPERTIES Z25 ACCORDING TO EN10164.

REFERENCE DRAWINGS

1	93M-0407-SEN-6OL11-END-10118-B PAGE 01:17
2	
3	
4	
5	
6	
7	
8	
9	
10	
11	

6TH OF OCTOBER CITY RAIL TRANSIT MONORAIL &
NEW CAPITAL CITY RAIL TRANSIT MONORAIL

The Authority — Hill International Authority Consultant — Main Contractor — Designer

CONTRACTOR CONSULTANT: ENGINEERING HOUSE FOR CONSULTANCY

6 October Monorail Engineering Unit
Valid For Construction

SCALE	SHOP DRAWING	DATE
AS SHOWN		20.11.2024

REV	DATE	BY	DESCRIPTION	CHK	APD
A	20-11-24	M.SH	ISSUE FOR APPROVAL	A.SH	M.M

DRAWING TITLE:
6TH OF OCTOBER MONORAIL
SHOP DRAWING FOR BRIDGE 6OL11-37
STEEL TRUSS (I).
WP1

Project Code	Rubric	Initiator	Lot	Ref	Number	Revision
93M	0407	ACC	60L11	DWG	90152	A

-Drawing shall be updated according to the comments on the GA drawing.
-Approval is subjected to the approval of coordination package between multi-discipline.

REVIEWED WITH COMMENT
MONORAILS PROJECT

All holes are 22mm U.N.O Length & Area & Weight per piece

Mark	Profile	Grade	QTY	Length	Area	Weight
WP2	PL20*520	S355J2N	4	2059.9	2.24	167.9

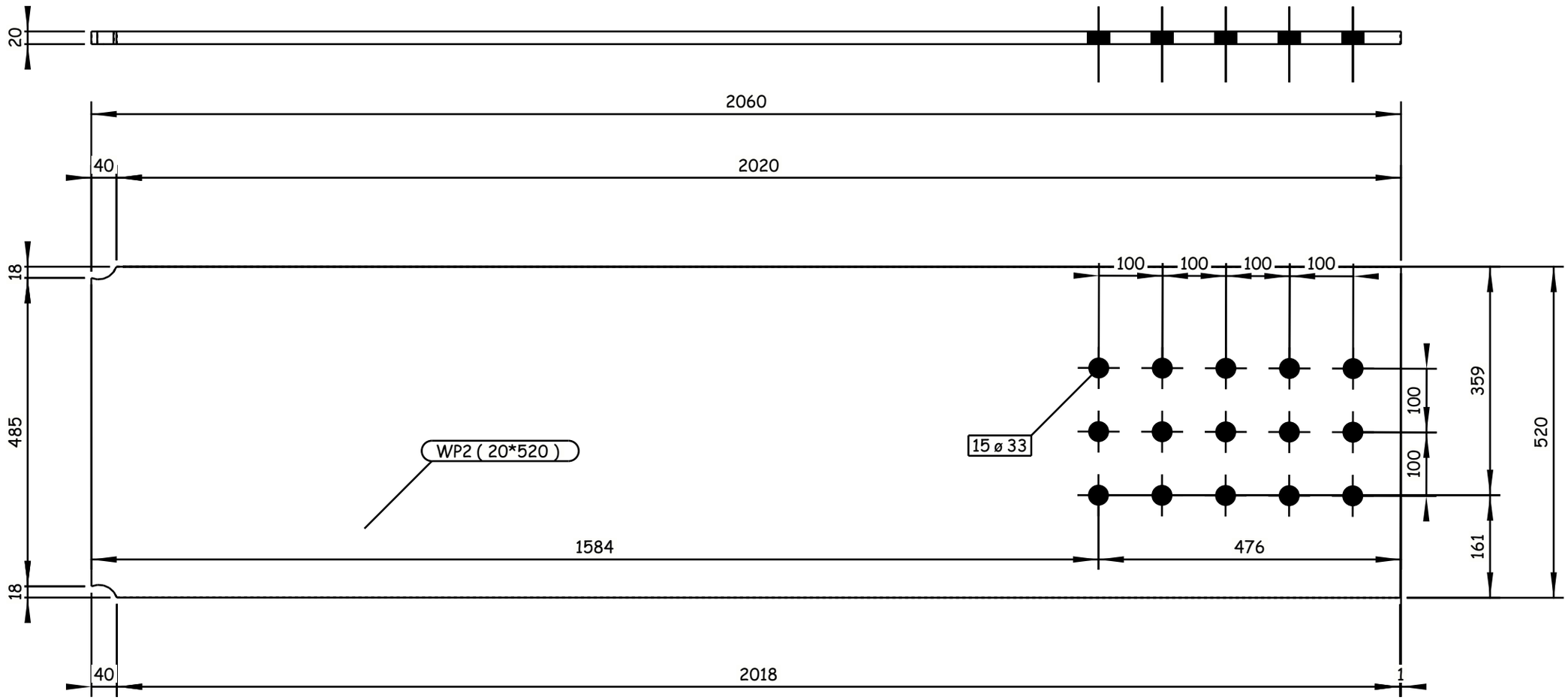

4 REQUIRED AS DRAWN E.SH WP2

Tekla structures

GENERAL NOTES:

1. ALL DIMENSIONS ARE IN MILLIMETERS UNLESS OTHERWISE SPECIFIED.
2. LEVELS ARE IN METERS
3. DESIGN SERVICE LIFE OF 100 YEARS.
4. FLANGES OF TOP AND BOTTOM CHORDS TO BE SUPPLIED WITH IMPROVED THROUGH THICKNESS PROPERTIES Z25 ACCORDING TO EN10164.

REFERENCE DRAWINGS

1	93M-0407-SEN-6OL11-END-10118-B PAGE 01:17
2	
3	
4	
5	
6	
7	
8	
9	
10	
11	

6TH OF OCTOBER CITY RAIL TRANSIT MONORAIL &
NEW CAPITAL CITY RAIL TRANSIT MONORAIL

The Authority — Hill International — Authority Consultant
ORASCOM CONSTRUCTION — BOMBARDIER — Main Contractor
SENER — SHAKER CONSULTANCY GROUP — Designer

CONTRACTOR & CONSULTANT:
EHC ENGINEERING HOUSE FOR CONSULTANCY

6 October Monorail
Engineering Unit
Valid For Cönstruction

SCALE: AS SHOWN | SHOP DRAWING | DATE: 20.11.2024

DRAWING TITLE:
6TH OF OCTOBER MONORAIL
SHOP DRAWING FOR BRIDGE 6OL11-37
STEEL TRUSS (I).
WP2

REV	DATE	BY	DESCRIPTION	CHK	APD
A	20-11-24	M.SH	ISSUE FOR APPROVAL	A.SH	M.M

Project Code	Rubric	Initiator	Lot	Ref	Number	Revision
93M	0407	ACC	60L11	DWG	90153	A

-Drawing shall be updated according to the comments on the GA drawing.
-Approval is subjected to the approval of coordination package between multi-discipline.

REVIEWED WITH COMMENT
MONORAILS PROJECT

All holes are 22mm U.N.O Length & Area & Weight per piece

Mark	Profile	Grade	QTY	Length	Area	Weight
WP3	PL12*360	S355J2N	8	2589.1	1.93	87.5

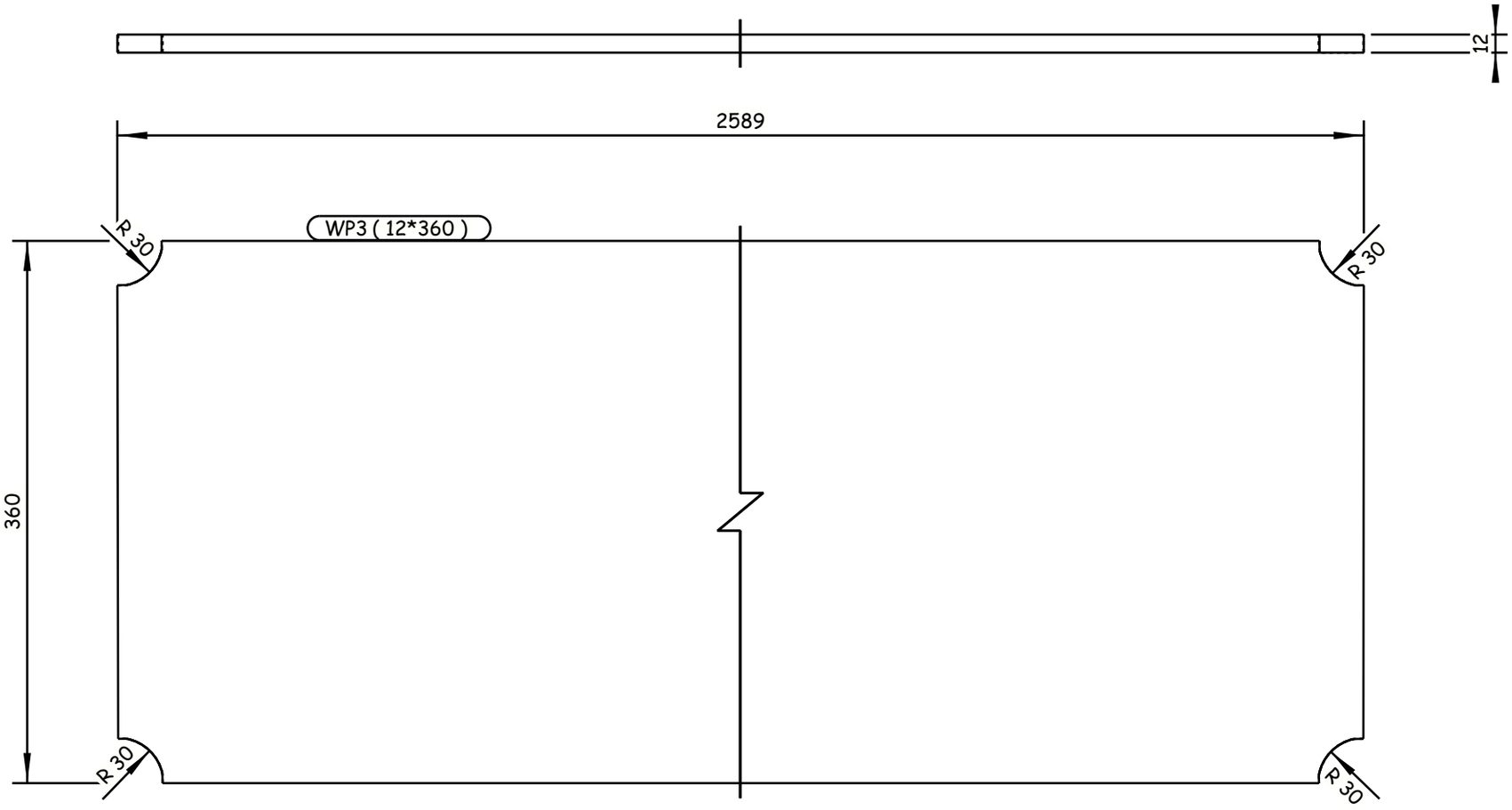

8 REQUIRED AS DRAWN E.SH WP3

Tekla structures

GENERAL NOTES:

1. ALL DIMENSIONS ARE IN MILLIMETERS UNLESS OTHERWISE SPECIFIED.
2. LEVELS ARE IN METERS
3. DESIGN SERVICE LIFE OF 100 YEARS.
4. FLANGES OF TOP AND BOTTOM CHORDS TO BE SUPPLIED WITH IMPROVED THROUGH THICKNESS PROPERTIES Z25 ACCORDING TO EN10164.

REFERENCE DRAWINGS

1	93M-0407-SEN-6OL11-END-10118-B PAGE 01:17
2	
3	
4	
5	
6	
7	
8	
9	
10	
11	

6TH OF OCTOBER CITY RAIL TRANSIT MONORAIL &
NEW CAPITAL CITY RAIL TRANSIT MONORAIL

The Authority
Hill International
Authority Consultant

ORASCOM CONSTRUCTION
Main Contractor

BOMBARDIER
SENER
SHAKER CONSULTANCY GROUP
Designer

CONTRACTOR:
CONSULTANT:

ENGINEERING HOUSE FOR CONSULTANCY

6 October Monorail
Engineering Unit
Valid For Construction

SCALE: AS SHOWN | CHK'D DRAWING | DATE: 20.11.2024

REV	DATE	BY	DESCRIPTION	CHK	APD
A	20-11-24	M.SH	ISSUE FOR APPROVAL	A.SH	M.M

DRAWING TITLE:
6TH OF OCTOBER MONORAIL
SHOP DRAWING FOR BRIDGE 6OL11-37
STEEL TRUSS (I).
WP3

Project Code	Rubric	Initiator	Lot	Ref	Number	Revision
93M	0407	ACC	60L11	DWG	90154	A

-Drawing shall be updated according to the comments on the GA drawing.
-Approval is subjected to the approval of coordination package between multi-discipline.

REVIEWED WITH COMMENT
MONORAILS PROJECT

All holes are 22mm U.N.O Length & Area & Weight per piece

Mark	Profile	Grade	QTY	Length	Area	Weight
WP4	PL20*550	S355J2N	4	2555.1	2.93	220.3

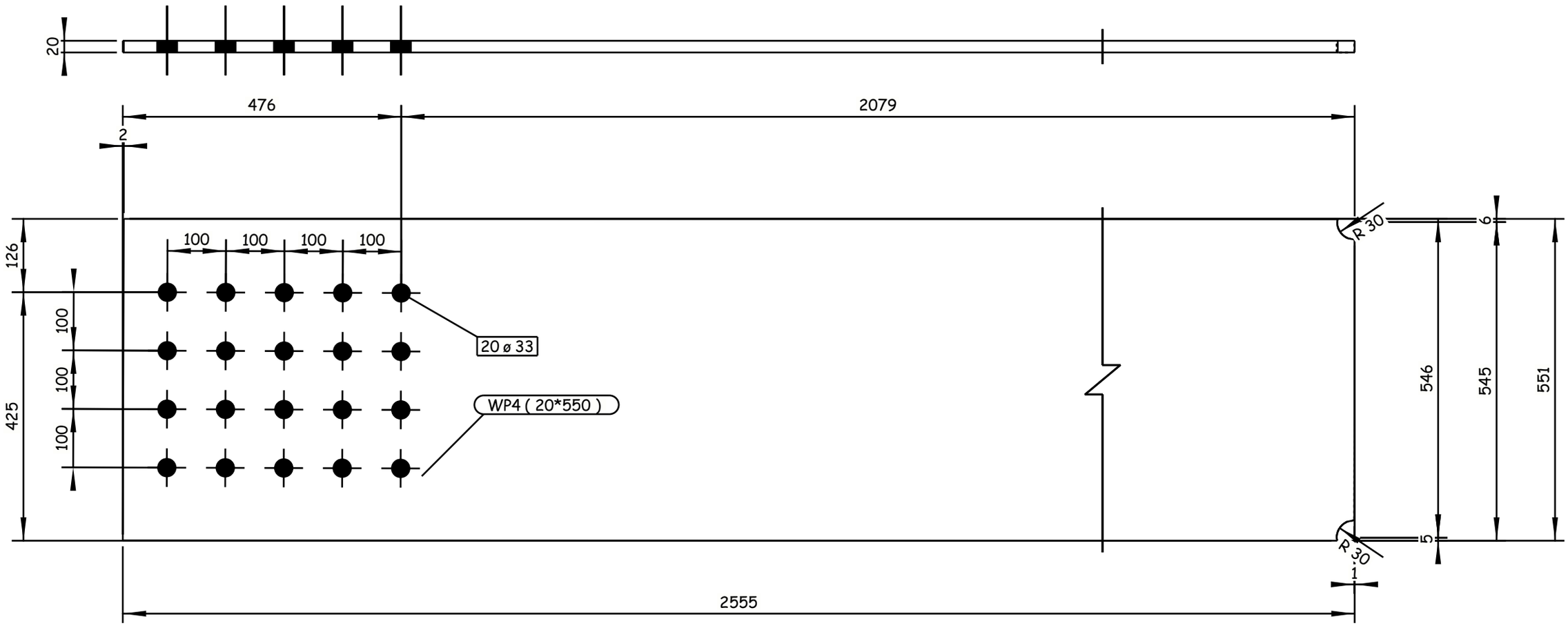

4 REQUIRED AS DRAWN E.SH WP4

6 October Monorail
Engineering Unit
Valid For Construction

Tekla structures

GENERAL NOTES:

1. ALL DIMENSIONS ARE IN MILLIMETERS UNLESS OTHERWISE SPECIFIED.
2. LEVELS ARE IN METERS
3. DESIGN SERVICE LIFE OF 100 YEARS.
4. FLANGES OF TOP AND BOTTOM CHORDS TO BE SUPPLIED WITH IMPROVED THROUGH THICKNESS PROPERTIES Z25 ACCORDING TO EN10164.

REFERENCE DRAWINGS

1	93M-0407-SEN-6OL11-END-10118-B PAGE 01:17
2	
3	
4	
5	
6	
7	
8	
9	
10	
11	

6TH OF OCTOBER CITY RAIL TRANSIT MONORAIL &
NEW CAPITAL CITY RAIL TRANSIT MONORAIL

The Authority — Hill International Authority Consultant | ORASCOM CONSTRUCTION — BOMBARDIER — Main Contractor | SENER — SHAKER CONSULTANCY GROUP — Designer

CONTRACTOR & CONSULTANT:
ENGINEERING HOUSE FOR CONSULTANCY

SCALE: AS SHOWN | SHOP DRAWING | DATE: 20.11.2024

DRAWING TITLE:
6TH OF OCTOBER MONORAIL
SHOP DRAWING FOR BRIDGE 6OL11-37
STEEL TRUSS (I).
WP4

REV	DATE	BY	DESCRIPTION	CHK	APD
A	20-11-24	M.SH	ISSUE FOR APPROVAL	A.SH	M.M

Project Code	Rubric	Initiator	Lot	Ref	Number	Revision
9 3	M 0 4 0 7	A C C	6 0 L 1 1	D W G	90155	A

-Drawing shall be updated according to the comments on the GA drawing.
-Approval is subjected to the approval of coordination package between multi-discipline.

REVIEWED WITH COMMENT
MONORAILS PROJECT

All holes are 22mm U.N.O Length & Area & Weight per piece

Mark	Profile	Grade	QTY	Length	Area	Weight
WP5	PL15*340	S355J2N	4	2602.8	1.85	103.9

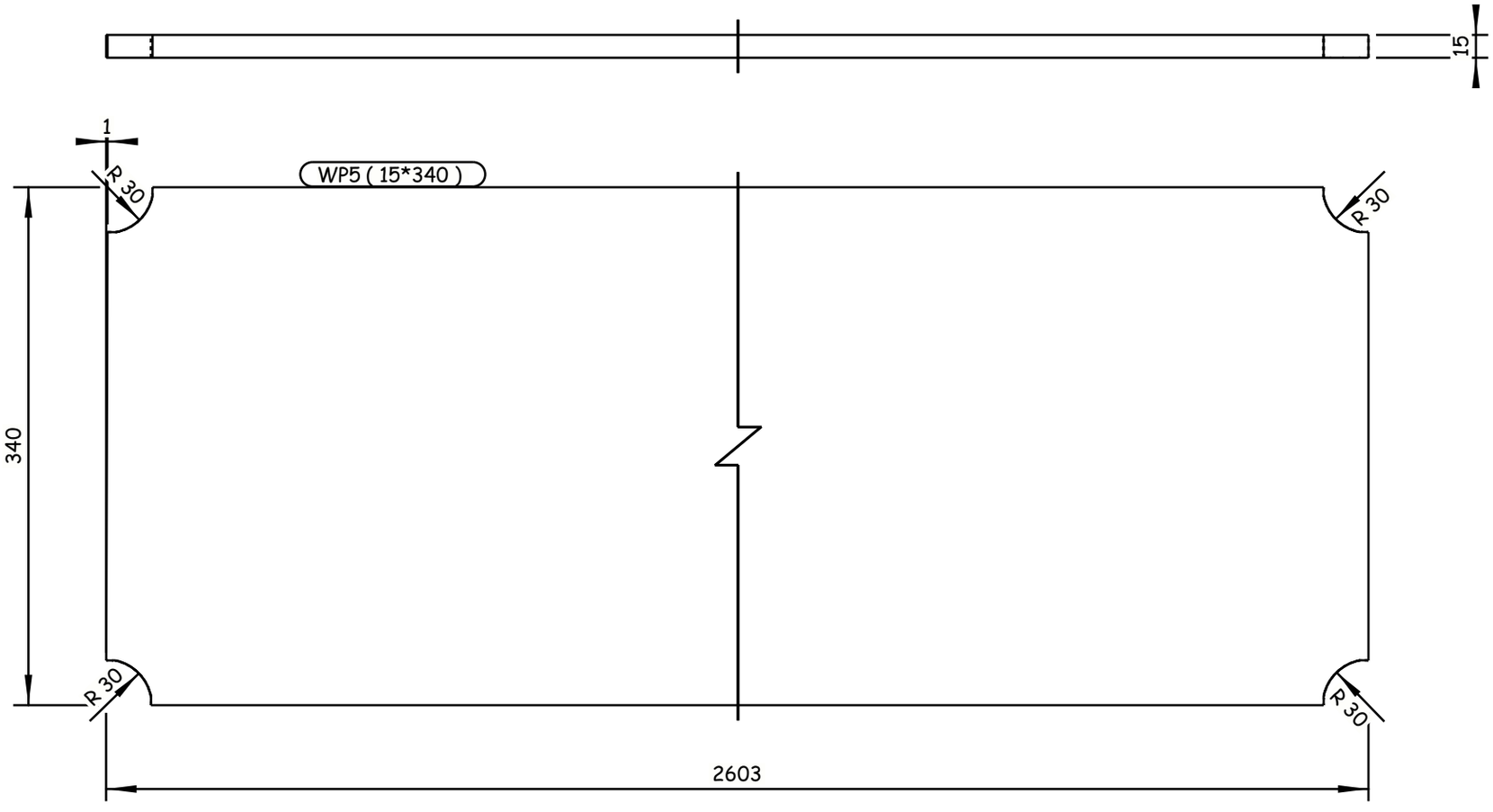

4 REQUIRED AS DRAWN E.SH WP5

Tekla structures

GENERAL NOTES:

1. ALL DIMENSIONS ARE IN MILLIMETERS UNLESS OTHERWISE SPECIFIED.
2. LEVELS ARE IN METERS
3. DESIGN SERVICE LIFE OF 100 YEARS.
4. FLANGES OF TOP AND BOTTOM CHORDS TO BE SUPPLIED WITH IMPROVED THROUGH THICKNESS PROPERTIES Z25 ACCORDING TO EN10164.

REFERENCE DRAWINGS

1	93M-0407-SEN-6OL11-END-10118-B PAGE 01:17
2	
3	
4	
5	
6	
7	
8	
9	
10	
11	

6TH OF OCTOBER CITY RAIL TRANSIT MONORAIL &
NEW CAPITAL CITY RAIL TRANSIT MONORAIL

The Authority
Hill International
Authority Consultant

ORASCOM CONSTRUCTION
Main Contractor

BOMBARDIER
SENER
SHAKER CONSULTANCY GROUP
Designer

CONTRACTOR
CONSULTANT :

ENGINEERING HOUSE FOR CONSULTANCY

6 October Monorail
Engineering Unit
Valid For Construction

SCALE	CHK'D DRAWING	DATE
AS SHOWN		20.11.2024

REV	DATE	BY	DESCRIPTION	CHK	APD
A	20-11-24	M.SH	ISSUE FOR APPROVAL	A.SH	M.M

DRAWING TITLE:
6TH OF OCTOBER MONORAIL
SHOP DRAWING FOR BRIDGE 6OL11-37
STEEL TRUSS (I).
WP5

Project Code	Rubric	Initiator	Lot	Ref	Number	Revision
9 3	M 0 4 0 7	A C C	6 0 L 1 1	D W G	90156	A

-Drawing shall be updated according to the comments on the GA drawing.
-Approval is subjected to the approval of coordination package between multi-discipline.

REVIEWED WITH COMMENT
MONORAILS PROJECT

All holes are 22mm U.N.O Length & Area & Weight per piece

Mark	Profile	Grade	QTY	Length	Area	Weight
WP6	PL12*360	S355J2N	4	2586.7	1.93	87.5

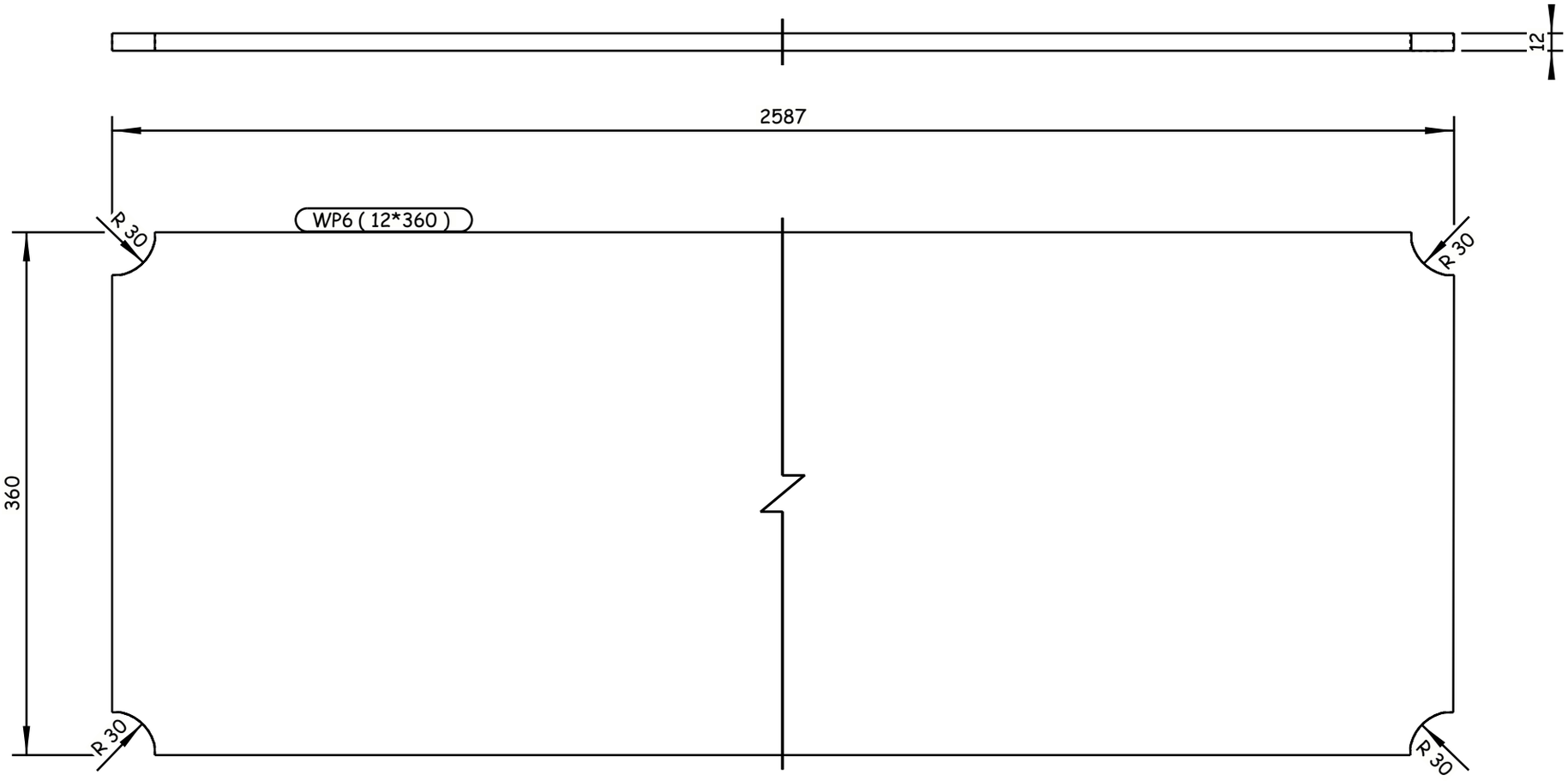

4 REQUIRED AS DRAWN E.SH WP6

GENERAL NOTES:

1. ALL DIMENSIONS ARE IN MILLIMETERS UNLESS OTHERWISE SPECIFIED.
2. LEVELS ARE IN METERS
3. DESIGN SERVICE LIFE OF 100 YEARS.
4. FLANGES OF TOP AND BOTTOM CHORDS TO BE SUPPLIED WITH IMPROVED THROUGH THICKNESS PROPERTIES Z25 ACCORDING TO EN10164.

REFERENCE DRAWINGS

1	93M-0407-SEN-6OL11-END-10118-B PAGE 01:17
2	
3	
4	
5	
6	
7	
8	
9	
10	
11	

6TH OF OCTOBER CITY RAIL TRANSIT MONORAIL &
NEW CAPITAL CITY RAIL TRANSIT MONORAIL

The Authority
Hill International
Authority Consultant

Main Contractor

Designer

CONTRACTOR & CONSULTANT:

ENGINEERING HOUSE FOR CONSULTANCY

6 October Monorail
Engineering Unit
Valid For Construction

SCALE: AS SHOWN | CHK'D DRAWING | DATE: 20.11.2024

REV	DATE	BY	DESCRIPTION	CHK	APD
A	20-11-24	M.SH	ISSUE FOR APPROVAL	A.SH	M.M

DRAWING TITLE:
6TH OF OCTOBER MONORAIL
SHOP DRAWING FOR BRIDGE 6OL11-37
STEEL TRUSS (I).
WP6

Project Code	Rubric	Initiator	Lot	Ref	Number	Revision
93M	0407	ACC	60L11	DWG	90157	A

Tekla structures

-Drawing shall be updated according to the comments on the GA drawing.
-Approval is subjected to the approval of coordination package between multi-discipline.

REVIEWED WITH COMMENT
MONORAILS PROJECT

All holes are 22mm U.N.O Length & Area & Weight per piece

Mark	Profile	Grade	QTY	Length	Area	Weight
WP7	PL15*340	S355J2N	4	2581.1	1.84	103.0

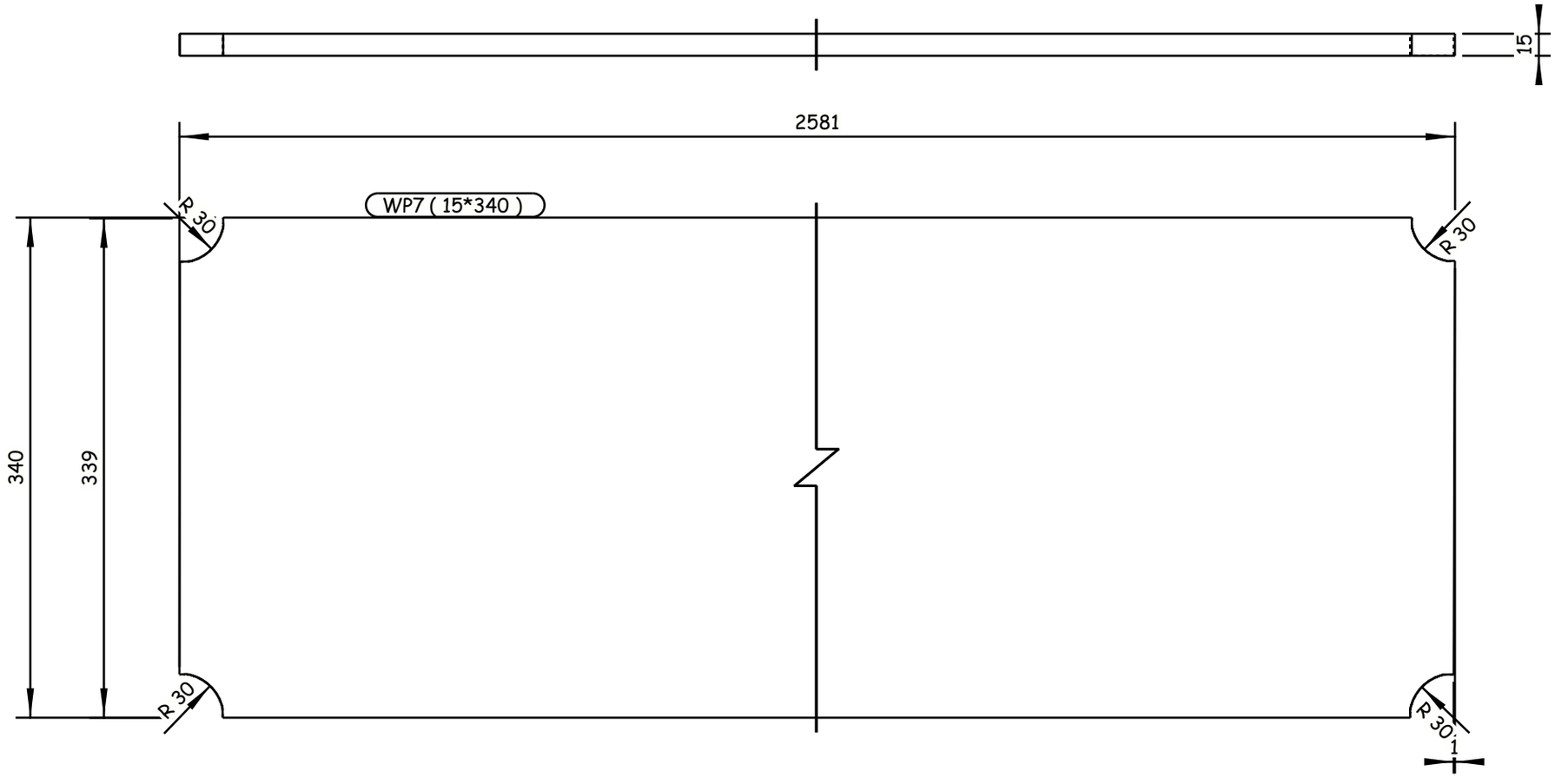

4 REQUIRED AS DRAWN E.SH WP7

Tekla structures

GENERAL NOTES:

1. ALL DIMENSIONS ARE IN MILLIMETERS UNLESS OTHERWISE SPECIFIED.
2. LEVELS ARE IN METERS
3. DESIGN SERVICE LIFE OF 100 YEARS.
4. FLANGES OF TOP AND BOTTOM CHORDS TO BE SUPPLIED WITH IMPROVED THROUGH THICKNESS PROPERTIES Z25 ACCORDING TO EN10164.

REFERENCE DRAWINGS

1	93M-0407-SEN-6OL11-END-10118-B PAGE 01:17
2	
3	
4	
5	
6	
7	
8	
9	
10	
11	

6TH OF OCTOBER CITY RAIL TRANSIT MONORAIL &
NEW CAPITAL CITY RAIL TRANSIT MONORAIL

The Authority
Hill International
Authority Consultant

Main Contractor

Designer

CONTRACTOR
CONSULTANT:

ENGINEERING HOUSE FOR CONSULTANCY

SCALE: AS SHOWN | CHK'D DRAWING | DATE: 20.11.2024

REV	DATE	BY	DESCRIPTION	CHK	APD
A	20-11-24	M.SH	ISSUE FOR APPROVAL	A.SH	M.M

6 October Monorail
Engineering Unit
Valid For Construction

DRAWING TITLE:
6TH OF OCTOBER MONORAIL
SHOP DRAWING FOR BRIDGE 6OL11-37
STEEL TRUSS (I).
WP7

Project Code	Rubric	Initiator	Lot	Ref	Number	Revision
9 3 M	0 4 0 7	A C C	6 0 L 1 1	D W G	90158	A

-Drawing shall be updated according to the comments on the GA drawing.
-Approval is subjected to the approval of coordination package between multi-discipline.

REVIEWED WITH COMMENT
MONORAILS PROJECT

All holes are 22mm U.N.O Length & Area & Weight per piece

Mark	Profile	Grade	QTY	Length	Area	Weight
WP8	PL15*330	S355J2N	4	2076.5	1.43	80.2

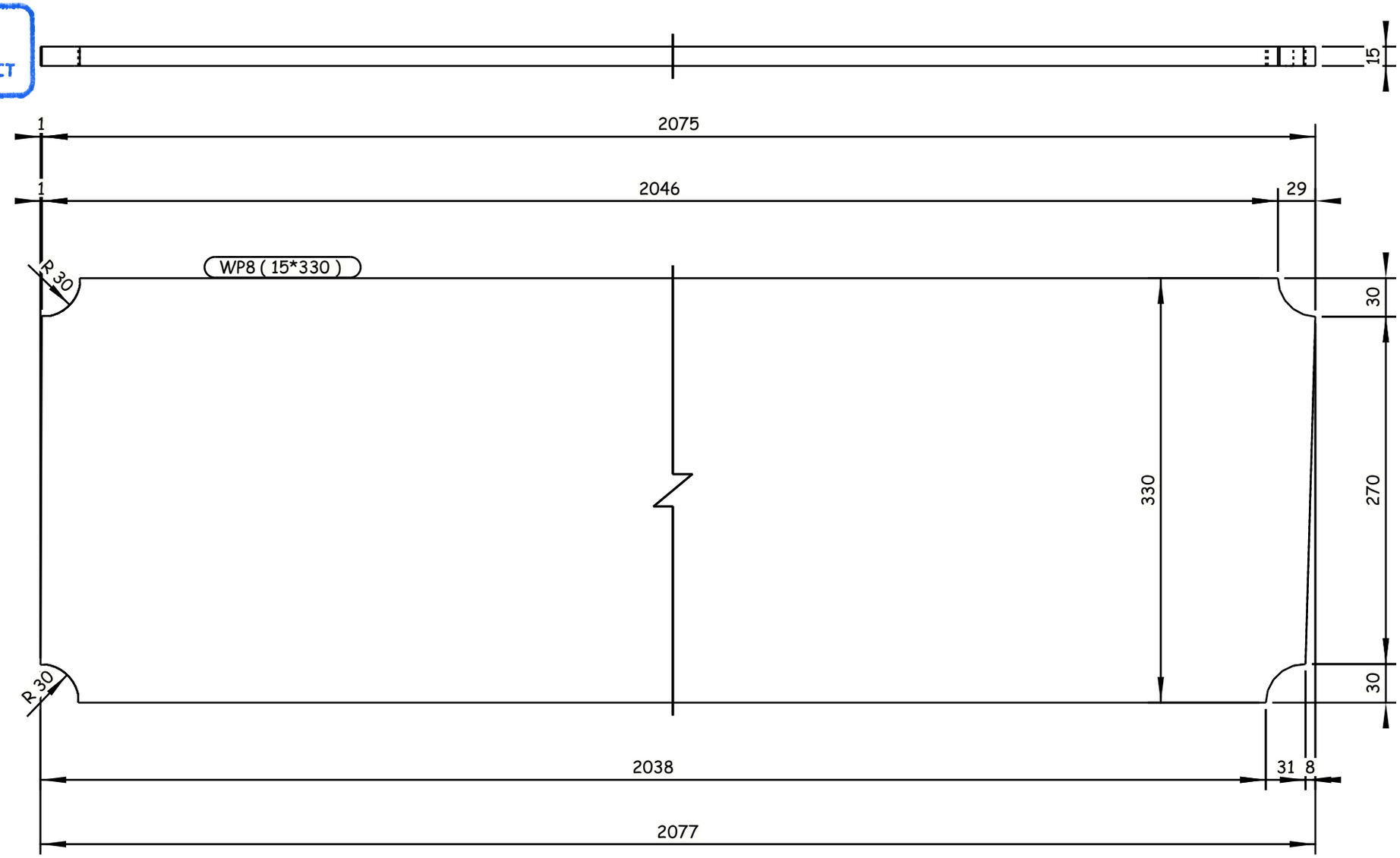

4 REQUIRED AS DRAWN E.SH WP8

6 October Monorail
Engineering Unit
Valid For Construction

GENERAL NOTES:

1. ALL DIMENSIONS ARE IN MILLIMETERS UNLESS OTHERWISE SPECIFIED.
2. LEVELS ARE IN METERS
3. DESIGN SERVICE LIFE OF 100 YEARS.
4. FLANGES OF TOP AND BOTTOM CHORDS TO BE SUPPLIED WITH IMPROVED THROUGH THICKNESS PROPERTIES Z25 ACCORDING TO EN10164.

REFERENCE DRAWINGS

1	93M-0407-SEN-6OL11-END-10118-B PAGE 01:17
2	
3	
4	
5	
6	
7	
8	
9	
10	
11	

6TH OF OCTOBER CITY RAIL TRANSIT MONORAIL &
NEW CAPITAL CITY RAIL TRANSIT MONORAIL

The Authority
Hill International
Authority Consultant

ORASCOM CONSTRUCTION
BOMBARDIER
Main Contractor

SENER
SHAKER CONSULTANCY GROUP
Designer

CONTRACTOR / CONSULTANT :
ENGINEERING HOUSE FOR CONSULTANCY

SCALE	SHD DRAWING	DATE
AS SHOWN		20.11.2024

REV	DATE	BY	DESCRIPTION	CHK	APD
A	20-11-24	M.SH	ISSUE FOR APPROVAL	A.SH	M.M

DRAWING TITLE:
6TH OF OCTOBER MONORAIL
SHOP DRAWING FOR BRIDGE 6OL11-37
STEEL TRUSS (I).
WP8

Project Code	Rubric	Initiator	Lot	Ref	Number	Revision
93M	0407	ACC	6OL11	DWG	90159	A

Tekla structures

-Drawing shall be updated according to the comments on the GA drawing.
-Approval is subjected to the approval of coordination package between multi-discipline.

REVIEWED WITH COMMENT
MONORAILS PROJECT

All holes are 22mm U.N.O Length & Area & Weight per piece

Mark	Profile	Grade	QTY	Length	Area	Weight
WP9	PL15*330	S355J2N	4	2606.9	1.80	100.9

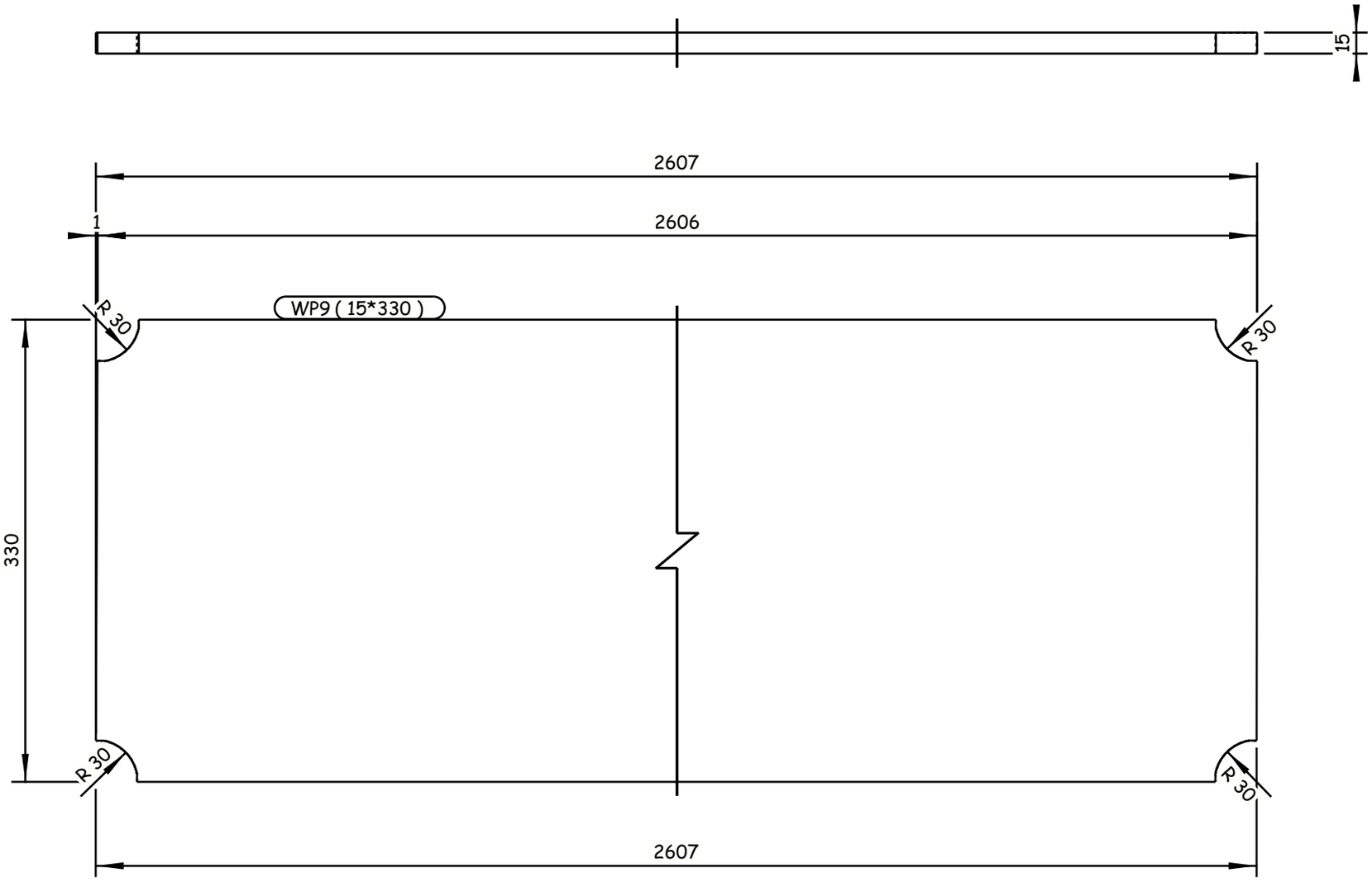

4 REQUIRED AS DRAWN E.SH WP9

6 October Monorail
Engineering Unit
Valid For Construction

Tekla structures

GENERAL NOTES:
1. ALL DIMENSIONS ARE IN MILLIMETERS UNLESS OTHERWISE SPECIFIED.
2. LEVELS ARE IN METERS
3. DESIGN SERVICE LIFE OF 100 YEARS.
4. FLANGES OF TOP AND BOTTOM CHORDS TO BE SUPPLIED WITH IMPROVED THROUGH THICKNESS PROPERTIES Z25 ACCORDING TO EN10164.

REFERENCE DRAWINGS

1	93M-0407-SEN-6OL11-END-10118-B PAGE 01:17
2	
3	
4	
5	
6	
7	
8	
9	
10	
11	

6TH OF OCTOBER CITY RAIL TRANSIT MONORAIL &
NEW CAPITAL CITY RAIL TRANSIT MONORAIL

The Authority
Hill International
Authority Consultant

ORASCOM CONSTRUCTION
Main Contractor

BOMBARDIER
SENER
SHAKER CONSULTANCY GROUP
Designer

CONTRACTOR / CONSULTANT:
ENGINEERING HOUSE FOR CONSULTANCY

SCALE: AS SHOWN | CHK'D DRAWING | DATE: 20.11.2024

REV	DATE	BY	DESCRIPTION	CHK	APD
A	20-11-24	M.SH	ISSUE FOR APPROVAL	A.SH	M.M

DRAWING TITLE:
6TH OF OCTOBER MONORAIL
SHOP DRAWING FOR BRIDGE 6OL11-37
STEEL TRUSS (I).
WP9

Project Code	Rubric	Initiator	Lot	Ref	Number	Revision
93M	0407	ACC	60L11	DWG	90160	A

-Drawing shall be updated according to the comments on the GA drawing.
-Approval is subjected to the approval of coordination package between multi-discipline.

REVIEWED WITH COMMENT
MONORAILS PROJECT

All holes are 22mm U.N.O Length & Area & Weight per piece

Mark	Profile	Grade	QTY	Length	Area	Weight
WP10	PL15*540	S355J2N	4	4087.7	4.55	259.7

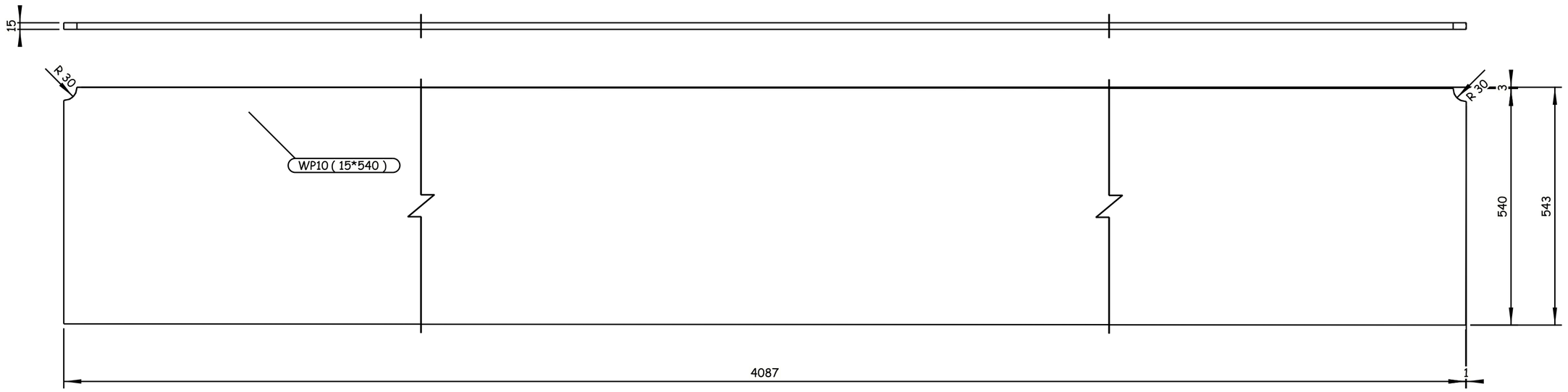

4 REQUIRED AS DRAWN E.SH WP10

GENERAL NOTES:

1. ALL DIMENSIONS ARE IN MILLIMETERS UNLESS OTHERWISE SPECIFIED.
2. LEVELS ARE IN METERS
3. DESIGN SERVICE LIFE OF 100 YEARS.
4. FLANGES OF TOP AND BOTTOM CHORDS TO BE SUPPLIED WITH IMPROVED THROUGH THICKNESS PROPERTIES Z25 ACCORDING TO EN10164.

REFERENCE DRAWINGS

1	93M-0407-SEN-6OL11-END-10118-B PAGE 01:17
2	
3	
4	
5	
6	
7	
8	
9	
10	
11	

6TH OF OCTOBER CITY RAIL TRANSIT MONORAIL &
NEW CAPITAL CITY RAIL TRANSIT MONORAIL

The Authority
Hill International
Authority Consultant

Main Contractor

Designer

CONTRACTOR
CONSULTANT:

ENGINEERING HOUSE FOR CONSULTANCY

REV	DATE	BY	DESCRIPTION	CHK	APD
A	20-11-24	M.SH	ISSUE FOR APPROVAL	A.SH	M.M

SCALE: AS SHOWN
SHOP DRAWING
DATE: 20.11.2024

6 October Monorail
Engineering Unit
Valid For Construction

DRAWING TITLE:
6TH OF OCTOBER MONORAIL
SHOP DRAWING FOR BRIDGE 6OL11-37
STEEL TRUSS (I).
WP10

Project Code	Rubric	Initiator	Lot	Ref	Number	Revision
93M	0407	ACC	60L111	DWG	90161	A

Tekla structures

-Drawing shall be updated according to the comments on the GA drawing.
-Approval is subjected to the approval of coordination package between multi-discipline.

REVIEWED WITH COMMENT
MONORAILS PROJECT

All holes are 22mm U.N.O Length & Area & Weight per piece

Mark	Profile	Grade	QTY	Length	Area	Weight
WP11	PL15*540	S355J2N	4	4085.5	4.55	259.6

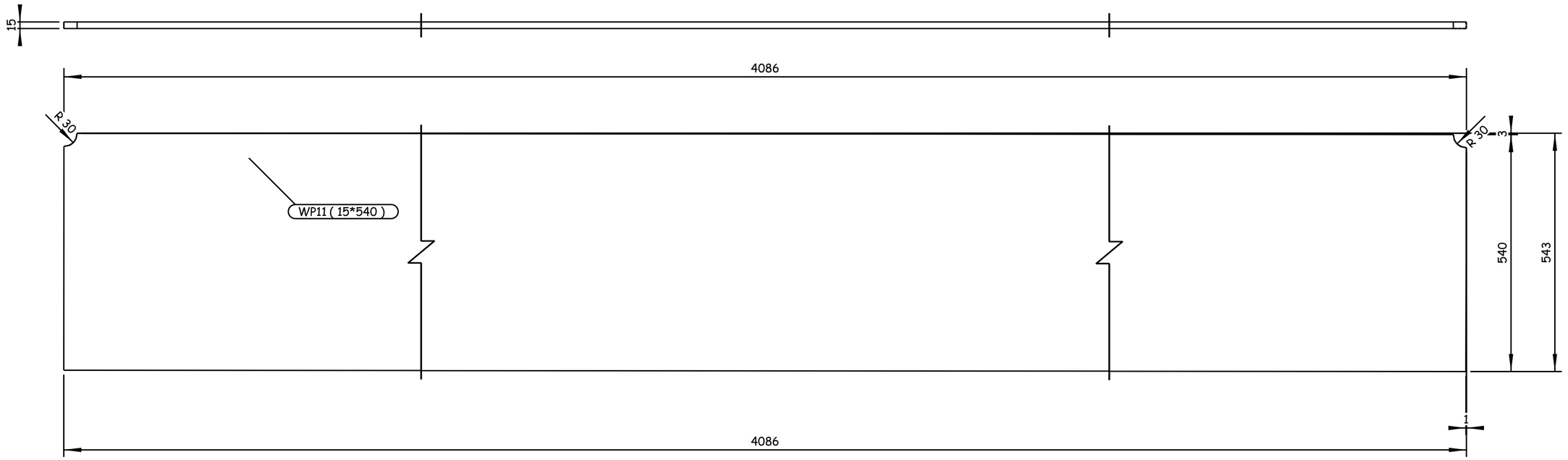

4 REQUIRED AS DRAWN E.SH WP11

GENERAL NOTES:

1. ALL DIMENSIONS ARE IN MILLIMETERS UNLESS OTHERWISE SPECIFIED.
2. LEVELS ARE IN METERS
3. DESIGN SERVICE LIFE OF 100 YEARS.
4. FLANGES OF TOP AND BOTTOM CHORDS TO BE SUPPLIED WITH IMPROVED THROUGH THICKNESS PROPERTIES Z25 ACCORDING TO EN10164.

REFERENCE DRAWINGS

1	93M-0407-SEN-6OL11-END-10118-B PAGE 01:17
2	
3	
4	
5	
6	
7	
8	
9	
10	
11	

6TH OF OCTOBER CITY RAIL TRANSIT MONORAIL &
NEW CAPITAL CITY RAIL TRANSIT MONORAIL

The Authority
Hill International
Authority Consultant
Main Contractor
Designer

CONTRACTOR
CONSULTANT:
ENGINEERING HOUSE FOR CONSULTANCY

SCALE: AS SHOWN | SHOP DRAWING | DATE: 20.11.2024

REV	DATE	BY	DESCRIPTION	CHK	APD
A	20-11-24	M.SH	ISSUE FOR APPROVAL	A.SH	M.M

6 October Monorail
Engineering Unit
Valid For Construction

DRAWING TITLE:
6TH OF OCTOBER MONORAIL
SHOP DRAWING FOR BRIDGE 6OL11-37
STEEL TRUSS (I).
WP11

Project Code	Rubric	Initiator	Lot	Ref	Number	Revision
93M	0407	ACC	6OL11	DWG	90162	A

Tekla structures

-Drawing shall be updated according to the comments on the GA drawing.
-Approval is subjected to the approval of coordination package between multi-discipline.

REVIEWED WITH COMMENT
MONORAILS PROJECT

All holes are 22mm U.N.O Length & Area & Weight per piece						
WP12	PL12*360	S355J2N	4	453.7	0.34	15.2
Mark	Profile	Grade	QTY	Length	Area	Weight

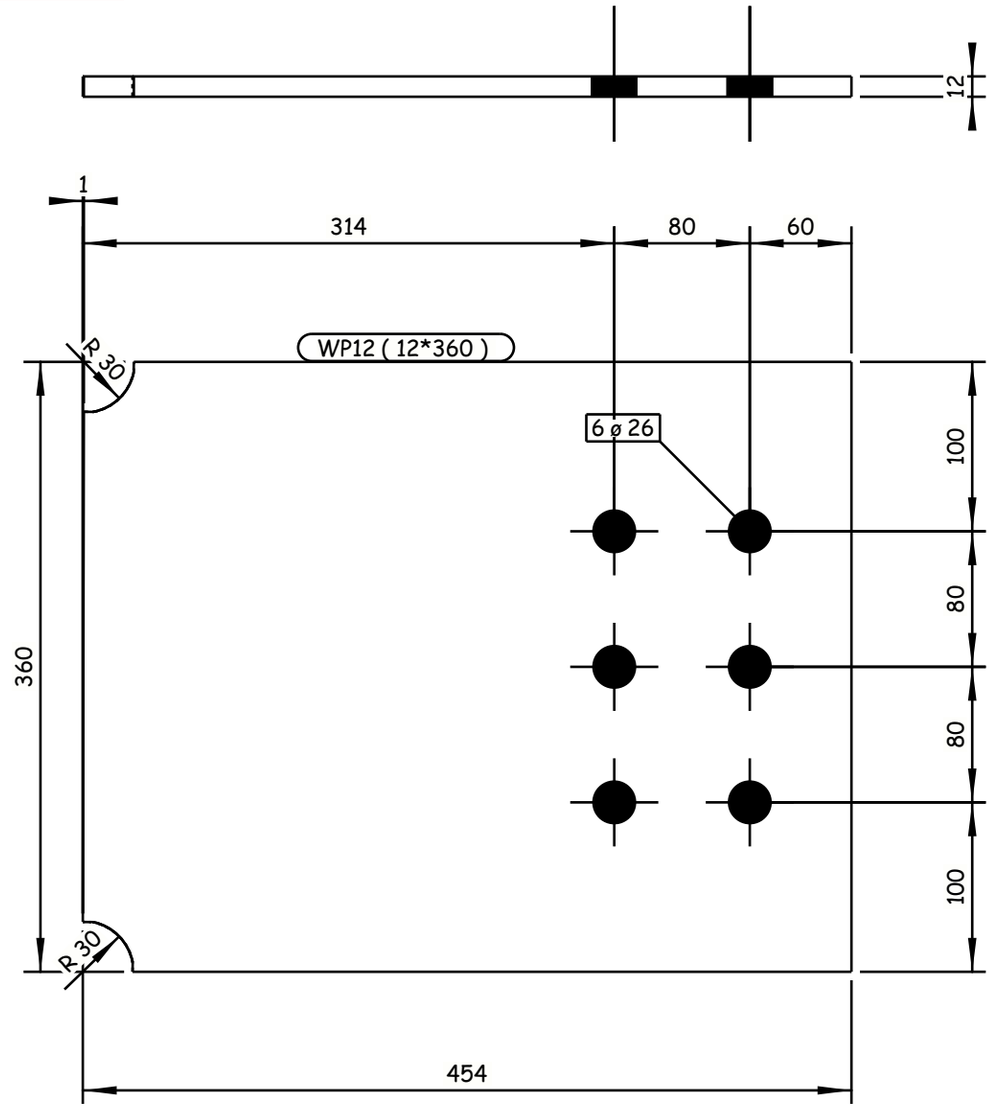

4 REQUIRED AS DRAWN E.SH WP12

Tekla structures

GENERAL NOTES:

1. ALL DIMENSIONS ARE IN MILLIMETERS UNLESS OTHERWISE SPECIFIED.
2. LEVELS ARE IN METERS
3. DESIGN SERVICE LIFE OF 100 YEARS.
4. FLANGES OF TOP AND BOTTOM CHORDS TO BE SUPPLIED WITH IMPROVED THROUGH THICKNESS PROPERTIES Z25 ACCORDING TO EN10164.

REFERENCE DRAWINGS

1	93M-0407-SEN-6OL11-END-10118-B PAGE 01:17
2	
3	
4	
5	
6	
7	
8	
9	
10	
11	

6TH OF OCTOBER CITY RAIL TRANSIT MONORAIL &
NEW CAPITAL CITY RAIL TRANSIT MONORAIL

The Authority
Hill International
Authority Consultant

Main Contractor

Designer

CONTRACTOR CONSULTANT :

ENGINEERING HOUSE FOR CONSULTANCY

6 October Monorail
Engineering Unit
Valid For Construction

SCALE	SHOP DRAWING	DATE
AS SHOWN		20.11.2024

REV	DATE	BY	DESCRIPTION	CHK	APD
A	20-11-24	M.SH	ISSUE FOR APPROVAL	A.SH	M.M

DRAWING TITLE:
6TH OF OCTOBER MONORAIL
SHOP DRAWING FOR BRIDGE 6OL11-37
STEEL TRUSS (I).
WP12

Project Code	Rubric	Initiator	Lot	Ref	Number	Revision
93M	0407	ACC	60L11	DWG	90163	A

-Drawing shall be updated according to the comments on the GA drawing.
-Approval is subjected to the approval of coordination package between multi-discipline.

REVIEWED WITH COMMENT
MONORAILS PROJECT

All holes are 22mm U.N.O Length & Area & Weight per piece

Mark	Profile	Grade	QTY	Length	Area	Weight
WP13	PL20*520	S355J2N	2	4086.1	4.43	333.4

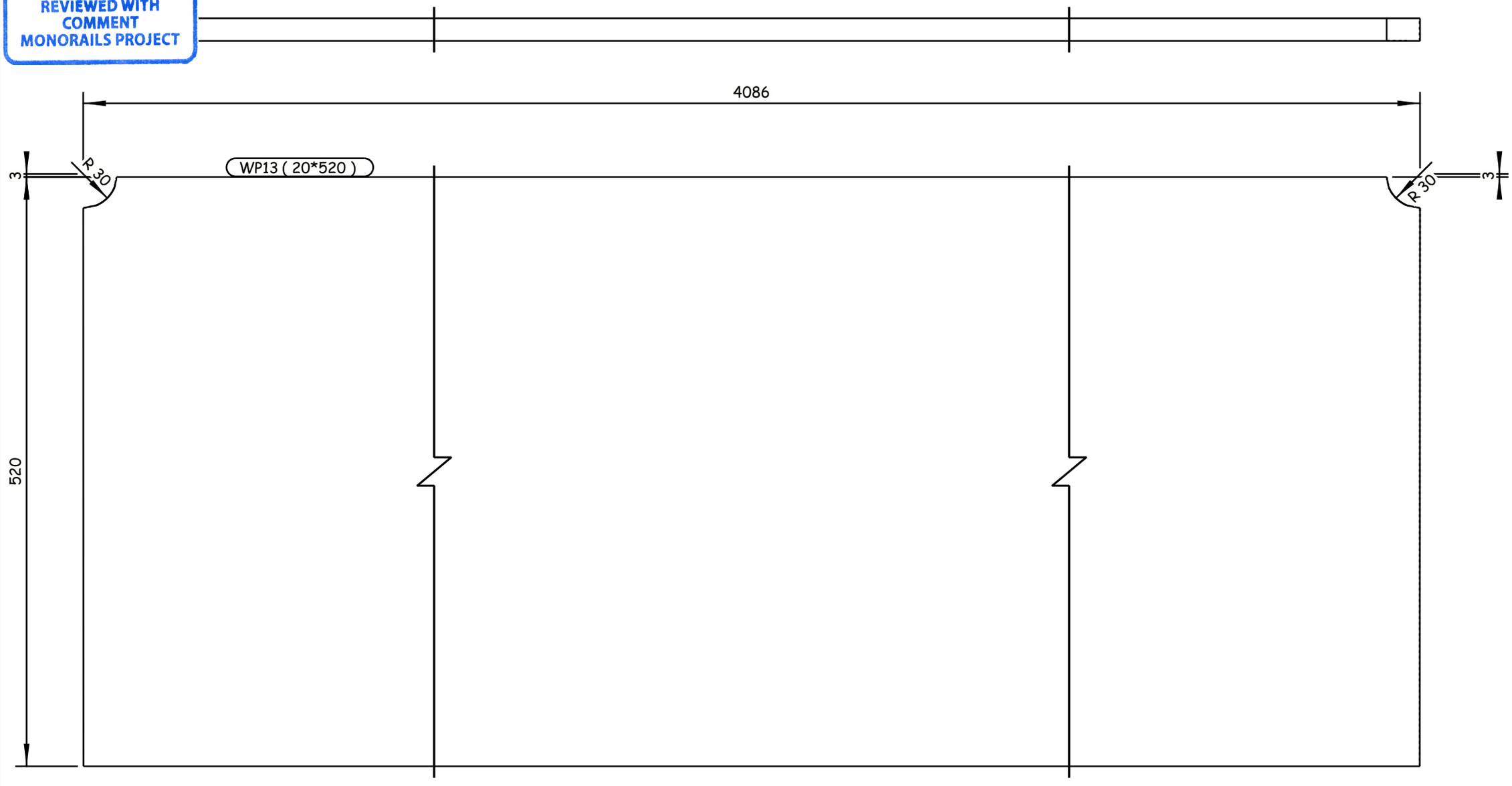

2 REQUIRED AS DRAWN E.SH WP13

GENERAL NOTES:

1. ALL DIMENSIONS ARE IN MILLIMETERS UNLESS OTHERWISE SPECIFIED.
2. LEVELS ARE IN METERS
3. DESIGN SERVICE LIFE OF 100 YEARS.
4. FLANGES OF TOP AND BOTTOM CHORDS TO BE SUPPLIED WITH IMPROVED THROUGH THICKNESS PROPERTIES Z25 ACCORDING TO EN10164.

REFERENCE DRAWINGS

1	93M-0407-SEN-6OL11-END-10118-B PAGE 01:17
2	
3	
4	
5	
6	
7	
8	
9	
10	
11	

6TH OF OCTOBER CITY RAIL TRANSIT MONORAIL &
NEW CAPITAL CITY RAIL TRANSIT MONORAIL

The Authority
Hill International
Authority Consultant

ORASCOM CONSTRUCTION
Main Contractor

BOMBARDIER
SENER
SHAKER CONSULTANCY GROUP
Designer

CONTRACTOR / CONSULTANT:
ENGINEERING HOUSE FOR CONSULTANCY

SCALE	CHK'D DRAWING	DATE
AS SHOWN		20.11.2024

REV	DATE	BY	DESCRIPTION	CHK	APD
A	20-11-24	M.SH	ISSUE FOR APPROVAL	A.SH	M.M

6 October Monorail
Engineering Unit
Valid For Construction

DRAWING TITLE:
6TH OF OCTOBER MONORAIL
SHOP DRAWING FOR BRIDGE 6OL11-37
STEEL TRUSS (I).
WP13

Project Code	Rubric	Initiator	Lot	Ref	Number	Revision
93M	0407	ACC	60L11	DWG	90164	A

Tekla structures

-Drawing shall be updated according to the comments on the GA drawing.
-Approval is subjected to the approval of coordination package between multi-discipline.

REVIEWED WITH COMMENT
MONORAILS PROJECT

All holes are 22mm U.N.O Length & Area & Weight per piece

Mark	Profile	Grade	QTY	Length	Area	Weight
WP14	PL20*550	S355J2N	4	763.1	0.89	65.6

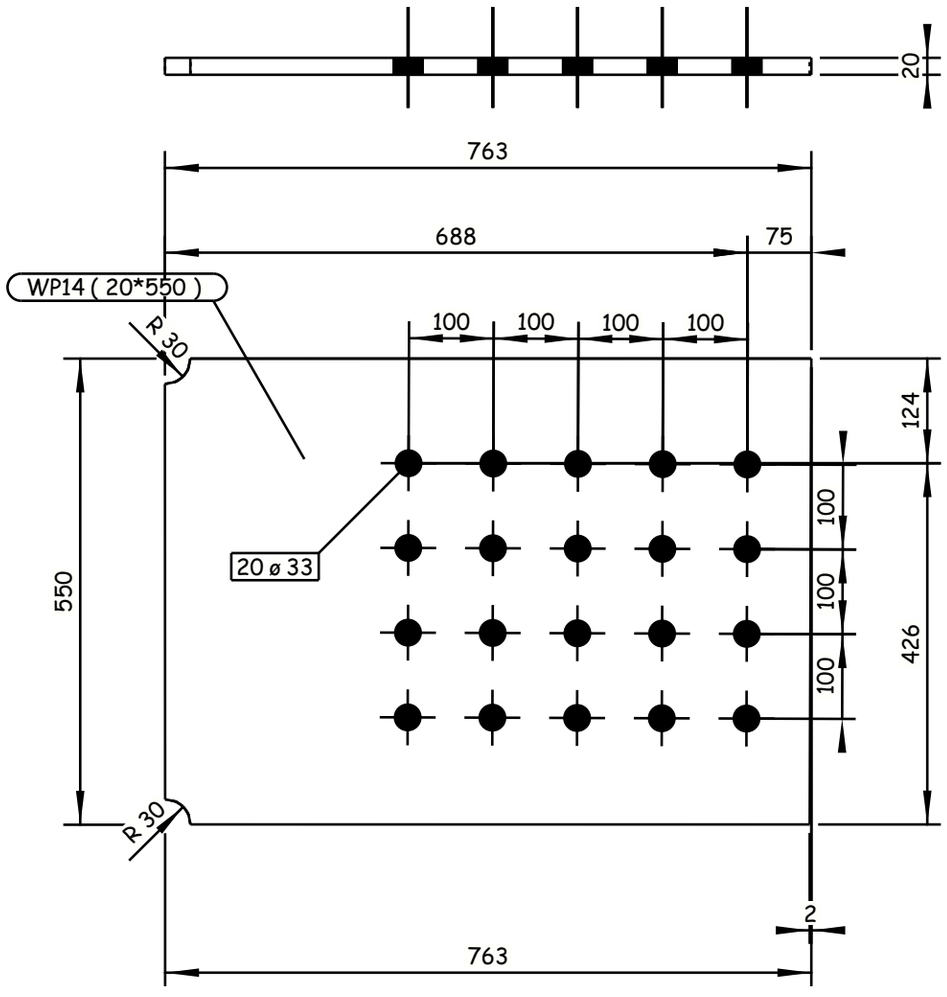

4 REQUIRED AS DRAWN E.SH WP14

GENERAL NOTES:

1. ALL DIMENSIONS ARE IN MILLIMETERS UNLESS OTHERWISE SPECIFIED.
2. LEVELS ARE IN METERS
3. DESIGN SERVICE LIFE OF 100 YEARS.
4. FLANGES OF TOP AND BOTTOM CHORDS TO BE SUPPLIED WITH IMPROVED THROUGH THICKNESS PROPERTIES Z25 ACCORDING TO EN10164.

REFERENCE DRAWINGS

1	93M-0407-SEN-6OL11-END-10118-B PAGE 01:17
2	
3	
4	
5	
6	
7	
8	
9	
10	
11	

6TH OF OCTOBER CITY RAIL TRANSIT MONORAIL &
NEW CAPITAL CITY RAIL TRANSIT MONORAIL

The Authority — Hill International Authority Consultant — Main Contractor — Designer

CONTRACTOR & CONSULTANT:

ENGINEERING HOUSE FOR CONSULTANCY

6 October Monorail Engineering Unit
Valid For Construction

SCALE: AS SHOWN | SHOP DRAWING | DATE: 20.11.2024

REV	DATE	BY	DESCRIPTION	CHK	APD
A	20-11-24	M.SH	ISSUE FOR APPROVAL	A.SH	M.M

DRAWING TITLE:
6TH OF OCTOBER MONORAIL
SHOP DRAWING FOR BRIDGE 6OL11-37
STEEL TRUSS (I).
WP14

Project Code	Rubric	Initiator	Lot	Ref	Number	Revision
93M	0407	ACC	60L11	DWG	90165	A

Tekla structures

-Drawing shall be updated according to the comments on the GA drawing.
-Approval is subjected to the approval of coordination package between multi-discipline.

REVIEWED WITH COMMENT
MONORAILS PROJECT

All holes are 22mm U.N.O Length & Area & Weight per piece

Mark	Profile	Grade	QTY	Length	Area	Weight
WP15	PL20*550	S355J2N	4	3326.6	3.81	286.9

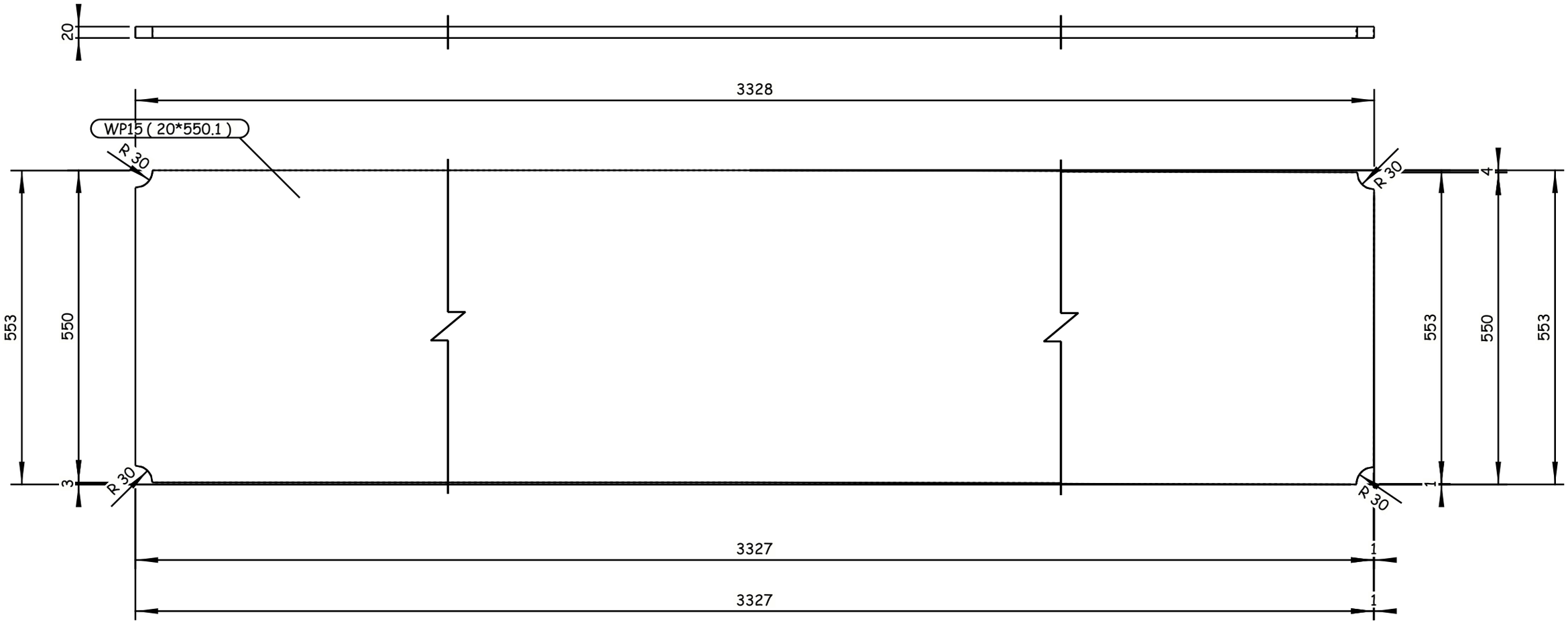

4 REQUIRED AS DRAWN E.SH WP15

GENERAL NOTES:

1. ALL DIMENSIONS ARE IN MILLIMETERS UNLESS OTHERWISE SPECIFIED.
2. LEVELS ARE IN METERS
3. DESIGN SERVICE LIFE OF 100 YEARS.
4. FLANGES OF TOP AND BOTTOM CHORDS TO BE SUPPLIED WITH IMPROVED THROUGH THICKNESS PROPERTIES Z25 ACCORDING TO EN10164.

REFERENCE DRAWINGS

1	93M-0407-SEN-6OL11-END-10118-B PAGE 01:17
2	
3	
4	
5	
6	
7	
8	
9	
10	
11	

6TH OF OCTOBER CITY RAIL TRANSIT MONORAIL &
NEW CAPITAL CITY RAIL TRANSIT MONORAIL

The Authority — Hill International Authority Consultant

ORASCOM CONSTRUCTION — BOMBARDIER — Main Contractor

SENER — SHAKER CONSULTANCY GROUP — Designer

CONTRACTOR & CONSULTANT:

EHC ENGINEERING HOUSE FOR CONSULTANCY

6 October Monorail
Engineering Unit
Valid For Construction

REV	DATE	BY	DESCRIPTION	CHK	APD
A	20-11-24	M.SH	ISSUE FOR APPROVAL	A.SH	M.M

SCALE: AS SHOWN | SHOP DRAWING | DATE: 20.11.2024

DRAWING TITLE:
6TH OF OCTOBER MONORAIL
SHOP DRAWING FOR BRIDGE 6OL11-37
STEEL TRUSS (I).
WP15

Project Code	Rubric	Initiator	Lot	Ref	Number	Revision
93M	0407	ACC	60L11	DWG	90166	A

Tekla structures

-Drawing shall be updated according to the comments on the GA drawing.
-Approval is subjected to the approval of coordination package between multi-discipline.

REVIEWED WITH COMMENT
MONORAILS PROJECT

All holes are 22mm U.N.O Length & Area & Weight per piece

Mark	Profile	Grade	QTY	Length	Area	Weight
WP16	PL20*540	S355J2N	4	3328.8	3.74	281.7

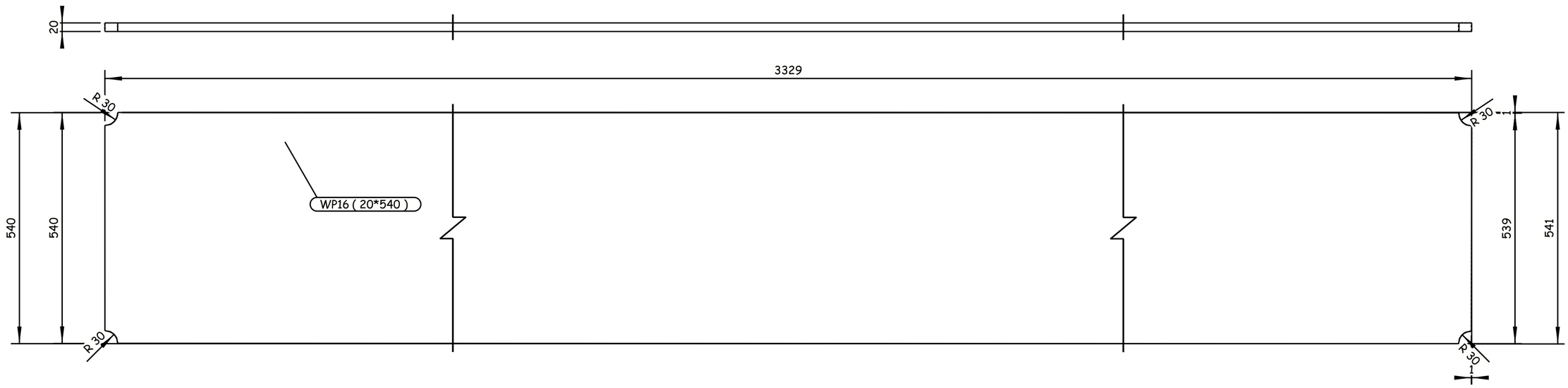

4 REQUIRED AS DRAWN E.SH WP16

GENERAL NOTES:

1. ALL DIMENSIONS ARE IN MILLIMETERS UNLESS OTHERWISE SPECIFIED.
2. LEVELS ARE IN METERS
3. DESIGN SERVICE LIFE OF 100 YEARS.
4. FLANGES OF TOP AND BOTTOM CHORDS TO BE SUPPLIED WITH IMPROVED THROUGH THICKNESS PROPERTIES Z25 ACCORDING TO EN10164.

REFERENCE DRAWINGS

1	93M-0407-SEN-6OL11-END-10118-B PAGE 01:17
2	
3	
4	
5	
6	
7	
8	
9	
10	
11	

6TH OF OCTOBER CITY RAIL TRANSIT MONORAIL &
NEW CAPITAL CITY RAIL TRANSIT MONORAIL

The Authority
Hill International
Authority Consultant
Main Contractor
Designer

CONTRACTOR
CONSULTANT:
ENGINEERING HOUSE FOR CONSULTANCY

6 October Monorail
Engineering Unit
Valid For Construction

SCALE	SHOP DRAWING	DATE
AS SHOWN		20.11.2024

REV	DATE	BY	DESCRIPTION	CHK	APD
A	20-11-24	M.SH	ISSUE FOR APPROVAL	A.SH	M.M

DRAWING TITLE:
6TH OF OCTOBER MONORAIL
SHOP DRAWING FOR BRIDGE 6OL11-37
STEEL TRUSS (I).
WP16

Project Code	Rubric	Initiator	Lot	Ref	Number	Revision
9 3 M	0 4 0 7	A C C	6 0 L 1 1	D W G	90167	A

Tekla structures

-Drawing shall be updated according to the comments on the GA drawing.
-Approval is subjected to the approval of coordination package between multi-discipline.

REVIEWED WITH COMMENT
MONORAILS PROJECT

All holes are 22mm U.N.O Length & Area & Weight per piece

Mark	Profile	Grade	QTY	Length	Area	Weight
WP17	PL12*360	S355J2N	4	2129.1	1.59	72.1

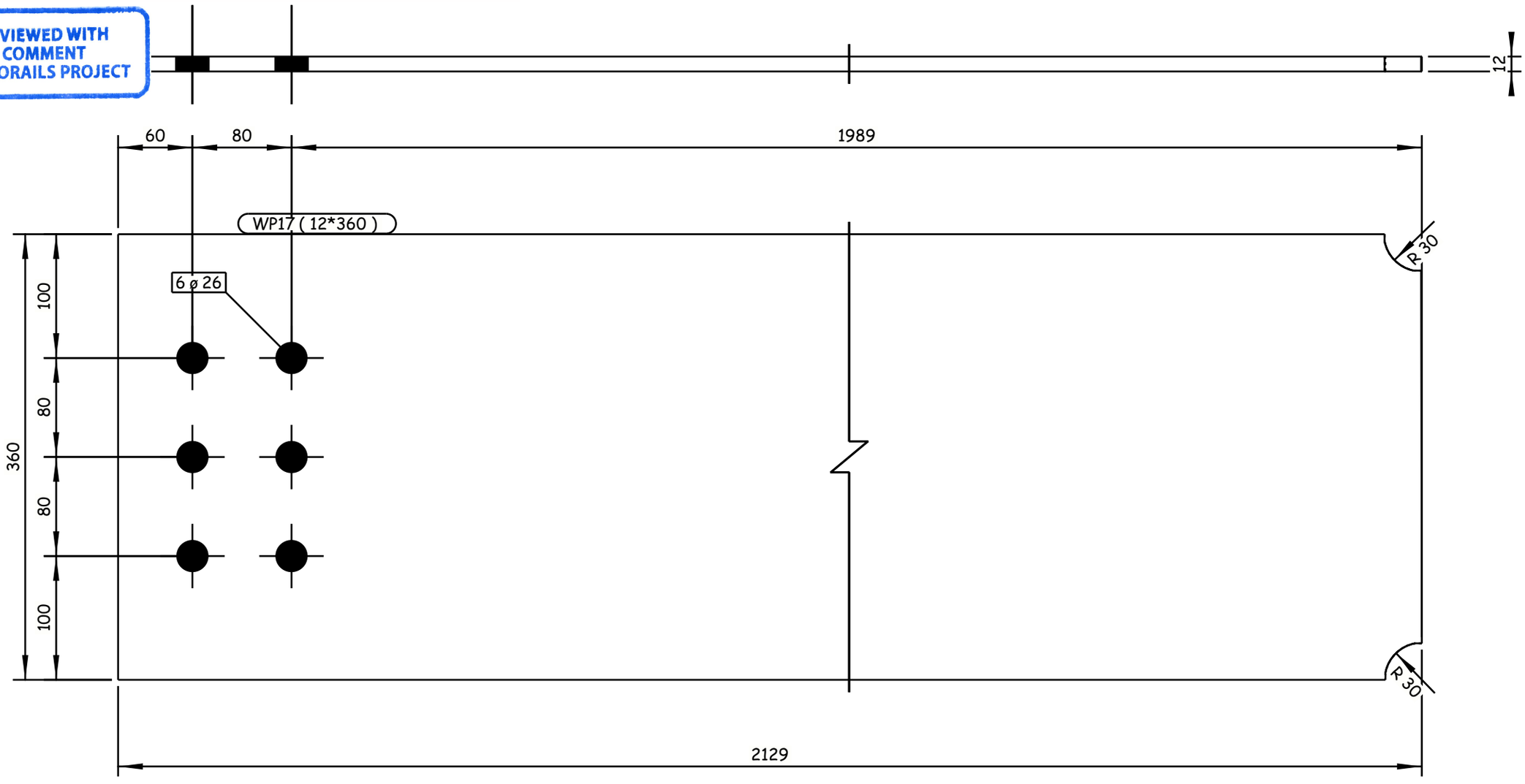

4 REQUIRED AS DRAWN E.SH WP17

GENERAL NOTES:

1. ALL DIMENSIONS ARE IN MILLIMETERS UNLESS OTHERWISE SPECIFIED.
2. LEVELS ARE IN METERS
3. DESIGN SERVICE LIFE OF 100 YEARS.
4. FLANGES OF TOP AND BOTTOM CHORDS TO BE SUPPLIED WITH IMPROVED THROUGH THICKNESS PROPERTIES Z25 ACCORDING TO EN10164.

REFERENCE DRAWINGS

1	93M-0407-SEN-6OL11-END-10118-B PAGE 01:17
2	
3	
4	
5	
6	
7	
8	
9	
10	
11	

6TH OF OCTOBER CITY RAIL TRANSIT MONORAIL &
NEW CAPITAL CITY RAIL TRANSIT MONORAIL

The Authority
Hill International
Authority Consultant

ORASCOM CONSTRUCTION
BOMBARDIER
Main Contractor

SENER
SHAKER CONSULTANCY GROUP
Designer

CONTRACTOR / CONSULTANT:
ENGINEERING HOUSE FOR CONSULTANCY

6 October Monorail
Engineering Unit
Valid For Construction

SCALE	SHOP DRAWING	DATE
AS SHOWN		20.11.2024

DRAWING TITLE:
6TH OF OCTOBER MONORAIL
SHOP DRAWING FOR BRIDGE 6OL11-37
STEEL TRUSS (I).
WP17

REV	DATE	BY	DESCRIPTION	CHK	APD
A	20-11-24	M.SH	ISSUE FOR APPROVAL	A.SH	M.M

Project Code	Rubric	Initiator	Lot	Ref	Number	Revision
93M	0407	ACC	60L11	DWG	90168	A

Tekla structures

-Drawing shall be updated according to the comments on the GA drawing.
-Approval is subjected to the approval of coordination package between multi-discipline.

REVIEWED WITH COMMENT
MONORAILS PROJECT

All holes are 22mm U.N.O Length & Area & Weight per piece

Mark	Profile	Grade	QTY	Length	Area	Weight
WP18	PL20*550	S355J2N	4	3280.8	3.76	282.9

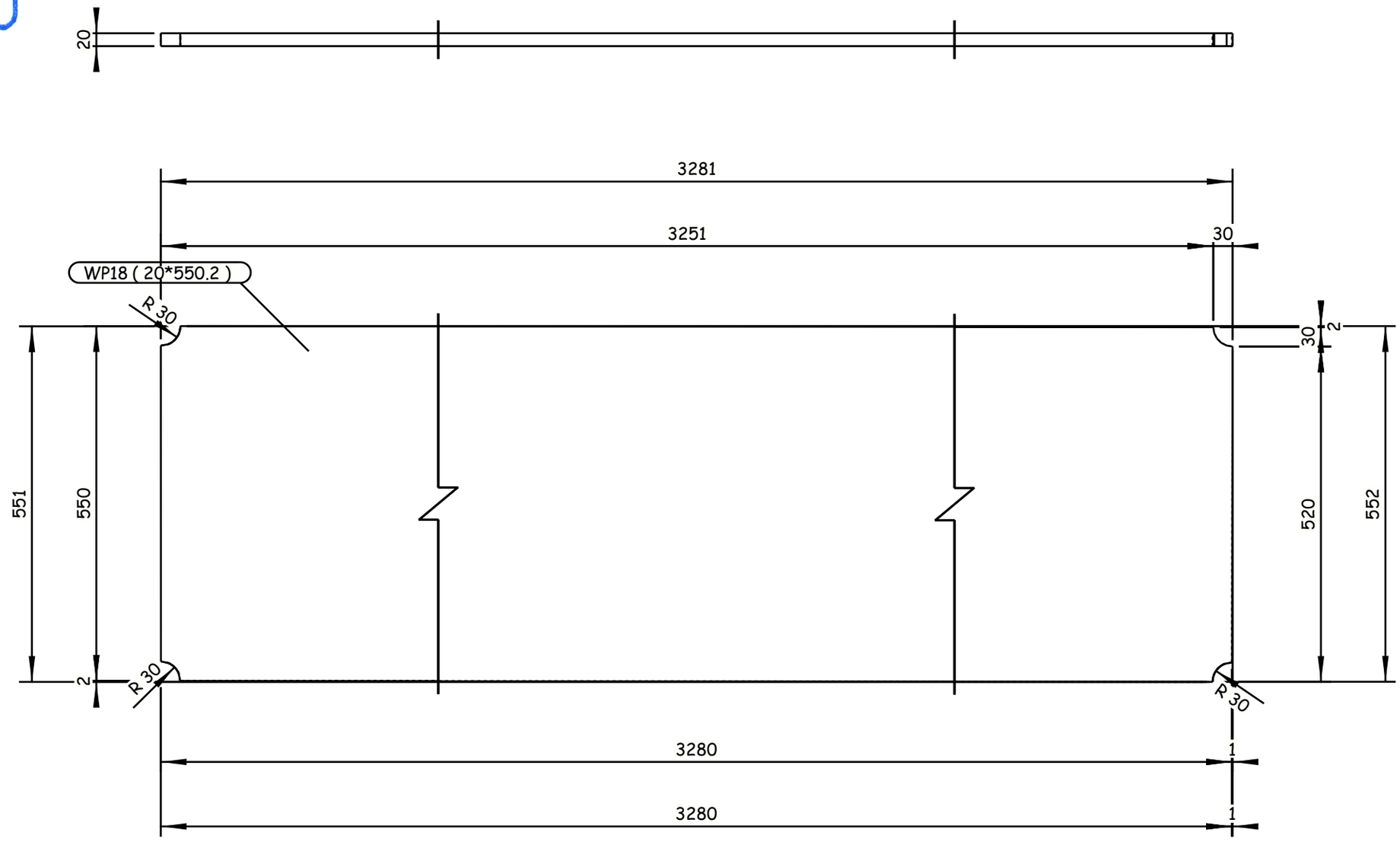

4 REQUIRED AS DRAWN E.SH WP18

Tekla structures

GENERAL NOTES:

1. ALL DIMENSIONS ARE IN MILLIMETERS UNLESS OTHERWISE SPECIFIED.
2. LEVELS ARE IN METERS
3. DESIGN SERVICE LIFE OF 100 YEARS.
4. FLANGES OF TOP AND BOTTOM CHORDS TO BE SUPPLIED WITH IMPROVED THROUGH THICKNESS PROPERTIES Z25 ACCORDING TO EN10164.

REFERENCE DRAWINGS

1	93M-0407-SEN-6OL11-END-10118-B PAGE 01:17
2	
3	
4	
5	
6	
7	
8	
9	
10	
11	

6TH OF OCTOBER CITY RAIL TRANSIT MONORAIL &
NEW CAPITAL CITY RAIL TRANSIT MONORAIL

The Authority
Hill International
Authority Consultant

Main Contractor

Designer

CONTRACTOR / CONSULTANT:

ENGINEERING HOUSE FOR CONSULTANCY

SCALE: AS SHOWN | CHK'D DRAWING | DATE: 20.11.2024

REV	DATE	BY	DESCRIPTION	CHK	APD
A	20-11-24	M.SH	ISSUE FOR APPROVAL	A.SH	M.M

6 October Monorail
Engineering Unit
Valid For Construction

DRAWING TITLE:
6TH OF OCTOBER MONORAIL
SHOP DRAWING FOR BRIDGE 6OL11-37
STEEL TRUSS (I).
WP18

Project Code	Rubric	Initiator	Lot	Ref	Number	Revision
93M	0407	ACC	60L11	DWG	90169	A

-Drawing shall be updated according to the comments on the GA drawing.
-Approval is subjected to the approval of coordination package between multi-discipline.

REVIEWED WITH COMMENT
MONORAILS PROJECT

All holes are 22mm U.N.O Length & Area & Weight per piece

Mark	Profile	Grade	QTY	Length	Area	Weight
XF3	FLT15*300	S355J2N	16	2855.0	1.81	100.9

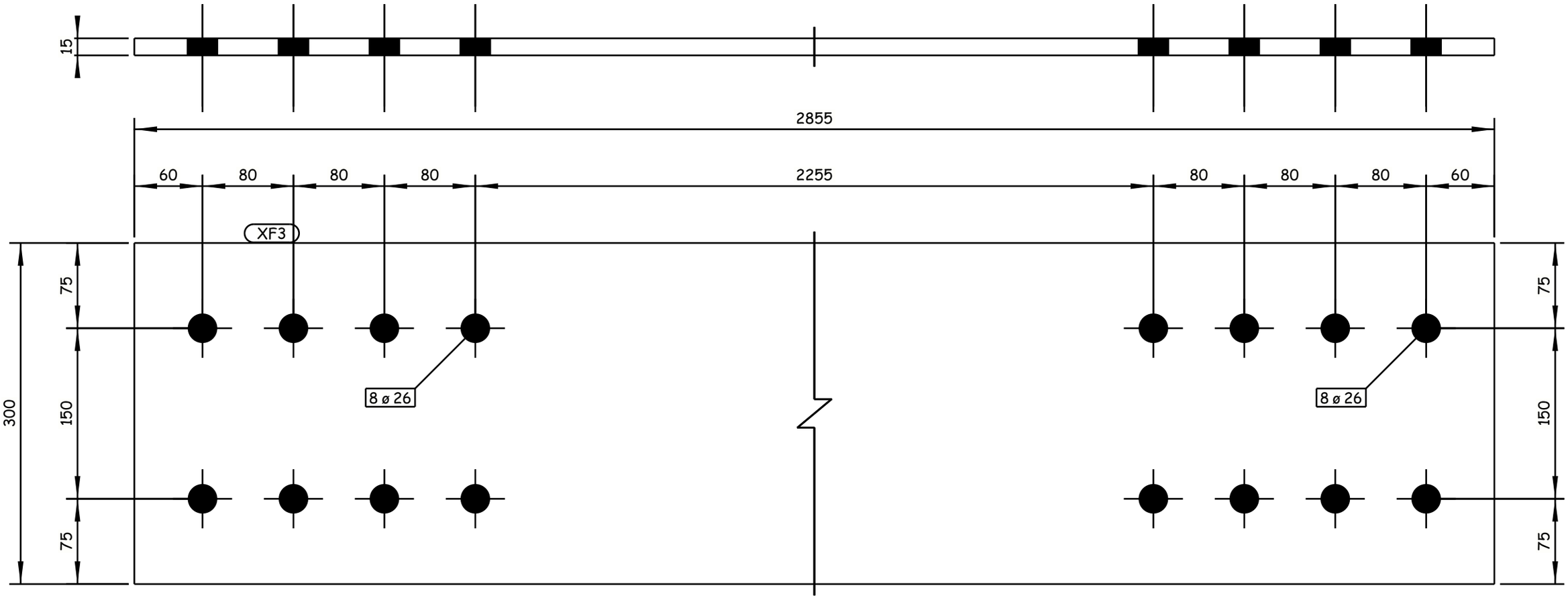

16 REQUIRED AS DRAWN E.SH XF3

GENERAL NOTES:

1. ALL DIMENSIONS ARE IN MILLIMETERS UNLESS OTHERWISE SPECIFIED.
2. LEVELS ARE IN METERS
3. DESIGN SERVICE LIFE OF 100 YEARS.
4. FLANGES OF TOP AND BOTTOM CHORDS TO BE SUPPLIED WITH IMPROVED THROUGH THICKNESS PROPERTIES Z25 ACCORDING TO EN10164.

REFERENCE DRAWINGS

1	93M-0407-SEN-6OL11-END-10118-B PAGE 01:17
2	
3	
4	
5	
6	
7	
8	
9	
10	
11	

6TH OF OCTOBER CITY RAIL TRANSIT MONORAIL &
NEW CAPITAL CITY RAIL TRANSIT MONORAIL

The Authority
Hill International
Authority Consultant

Main Contractor

Designer

CONTRACTOR / CONSULTANT:

ENGINEERING HOUSE FOR CONSULTANCY

SCALE: AS SHOWN | CHD DRAWING | DATE: 20.11.2024

REV	DATE	BY	DESCRIPTION	CHK	APD
A	20-11-24	M.SH	ISSUE FOR APPROVAL	A.SH	M.M

6 October Monorail
Engineering Unit
Valid For Construction

DRAWING TITLE:
6TH OF OCTOBER MONORAIL
SHOP DRAWING FOR BRIDGE 6OL11-37
STEEL TRUSS (I).
XF3

Project Code	Rubric	Initiator	Lot	Ref	Number	Revision
93M	0407	ACC	6OL11	DWG	90170	A

Tekla structures

-Drawing shall be updated according to the comments on the GA drawing.
-Approval is subjected to the approval of coordination package between multi-discipline.

REVIEWED WITH COMMENT
MONORAILS PROJECT

All holes are 22mm U.N.O Length & Area & Weight per piece

Mark	Profile	Grade	QTY	Length	Area	Weight
XF5	FLT15*300	S355J2N	14	2840.0	1.80	100.3

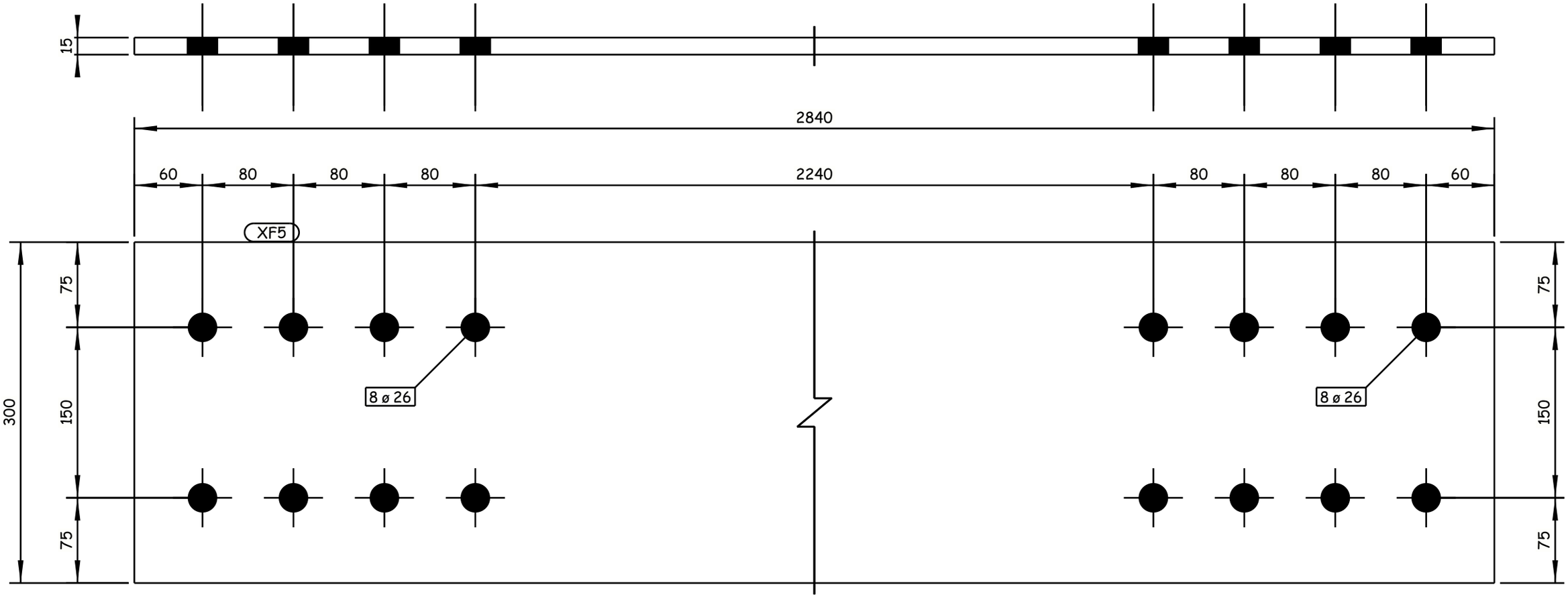

14 REQUIRED AS DRAWN E.SH XF5

GENERAL NOTES:

1. ALL DIMENSIONS ARE IN MILLIMETERS UNLESS OTHERWISE SPECIFIED.
2. LEVELS ARE IN METERS
3. DESIGN SERVICE LIFE OF 100 YEARS.
4. FLANGES OF TOP AND BOTTOM CHORDS TO BE SUPPLIED WITH IMPROVED THROUGH THICKNESS PROPERTIES Z25 ACCORDING TO EN10164.

REFERENCE DRAWINGS

1	93M-0407-SEN-6OL11-END-10118-B PAGE 01:17
2	
3	
4	
5	
6	
7	
8	
9	
10	
11	

6TH OF OCTOBER CITY RAIL TRANSIT MONORAIL &
NEW CAPITAL CITY RAIL TRANSIT MONORAIL

The Authority
Hill International
Authority Consultant

Main Contractor

Designer

CONTRACTOR / CONSULTANT:

ENGINEERING HOUSE FOR CONSULTANCY

SCALE: AS SHOWN | CHD DRAWING | DATE: 20.11.2024

REV	DATE	BY	DESCRIPTION	CHK	APD
A	20-11-24	M.SH	ISSUE FOR APPROVAL	A.SH	M.M

6 October Monorail
Engineering Unit
Valid For Construction

DRAWING TITLE:
6TH OF OCTOBER MONORAIL
SHOP DRAWING FOR BRIDGE 6OL11-37
STEEL TRUSS (I).
XF5

Project Code	Rubric	Initiator	Lot	Ref	Number	Revision
93M	407	ACC	6OL11	DWG	90171	A

Tekla structures

-Drawing shall be updated according to the comments on the GA drawing.
-Approval is subjected to the approval of coordination package between multi-discipline.

REVIEWED WITH COMMENT
MONORAILS PROJECT

All holes are 22mm U.N.O Length & Area & Weight per piece

Mark	Profile	Grade	QTY	Length	Area	Weight
XF7	PL15*670	S355J2N	28	697.0	0.48	25.7

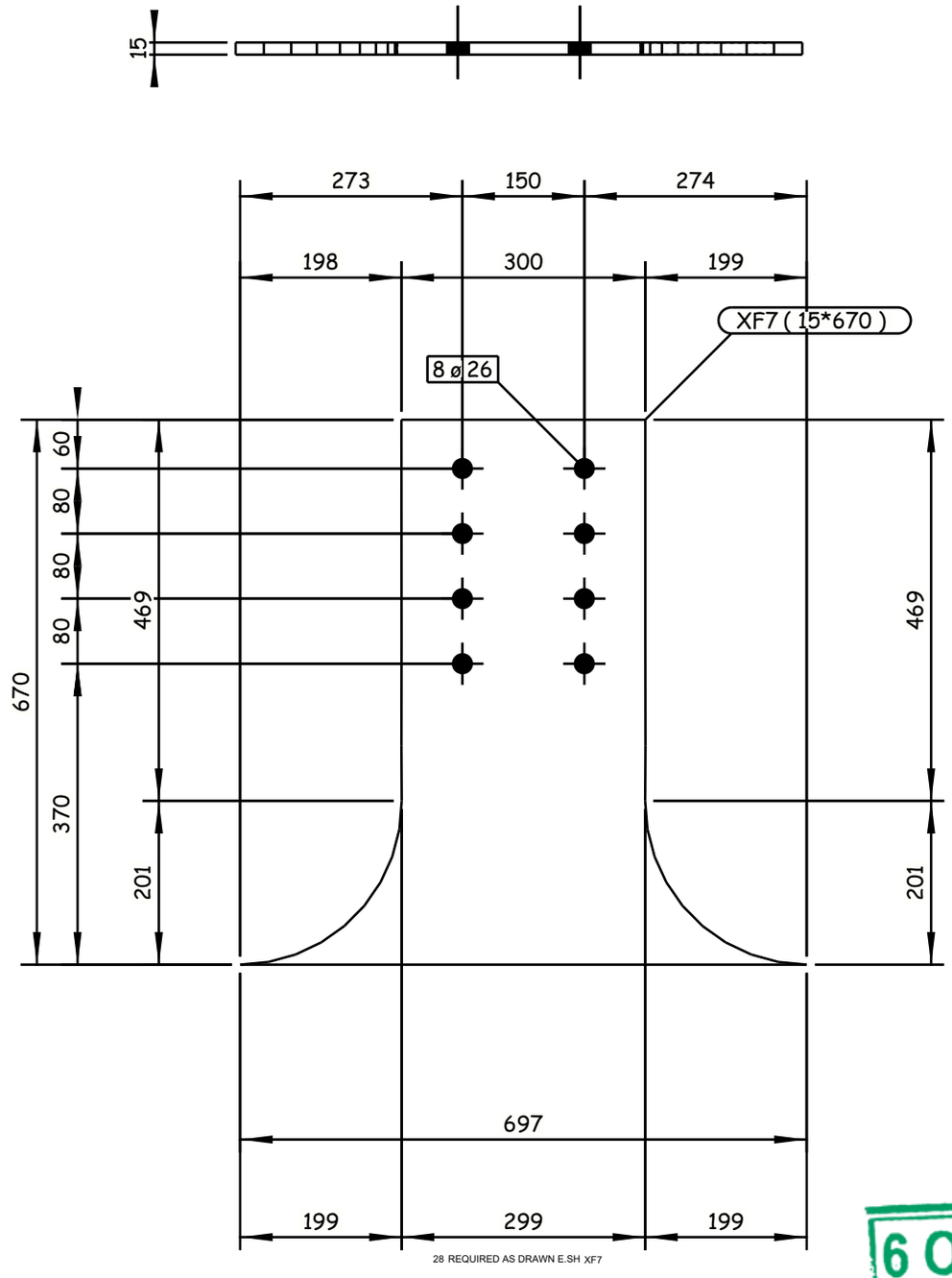

28 REQUIRED AS DRAWN E.SH XF7

GENERAL NOTES:

1. ALL DIMENSIONS ARE IN MILLIMETERS UNLESS OTHERWISE SPECIFIED.
2. LEVELS ARE IN METERS
3. DESIGN SERVICE LIFE OF 100 YEARS.
4. FLANGES OF TOP AND BOTTOM CHORDS TO BE SUPPLIED WITH IMPROVED THROUGH THICKNESS PROPERTIES Z25 ACCORDING TO EN10164.

REFERENCE DRAWINGS

1	93M-0407-SEN-6OL11-END-10118-B PAGE 01:17
2	
3	
4	
5	
6	
7	
8	
9	
10	
11	

6TH OF OCTOBER CITY RAIL TRANSIT MONORAIL &
NEW CAPITAL CITY RAIL TRANSIT MONORAIL

The Authority
Hill International
Authority Consultant
ORASCOM CONSTRUCTION
Main Contractor
BOMBARDIER
SENER
SHAKER CONSULTANCY GROUP
Designer

CONTRACTOR & CONSULTANT:
ENGINEERING HOUSE FOR CONSULTANCY

SCALE: AS SHOWN | CHK'D DRAWING | DATE: 20.11.2024

REV	DATE	BY	DESCRIPTION	CHK	APD
A	20-11-24	M.SH	ISSUE FOR APPROVAL	A.SH	M.M

6 October Monorail
Engineering Unit
Valid For Construction

DRAWING TITLE:
6TH OF OCTOBER MONORAIL
SHOP DRAWING FOR BRIDGE 6OL11-37
STEEL TRUSS (I).
XF7

Project Code	Rubric	Initiator	Lot	Ref	Number	Revision
93M	0407	ACC	60L11	DWG	90172	A

Tekla structures

-Drawing shall be updated according to the comments on the GA drawing.
-Approval is subjected to the approval of coordination package between multi-discipline.

REVIEWED WITH COMMENT
MONORAILS PROJECT

All holes are 22mm U.N.O Length & Area & Weight per piece

Mark	Profile	Grade	QTY	Length	Area	Weight
XW1	PL10*570	S355J2N	8	2855.0	3.32	127.7

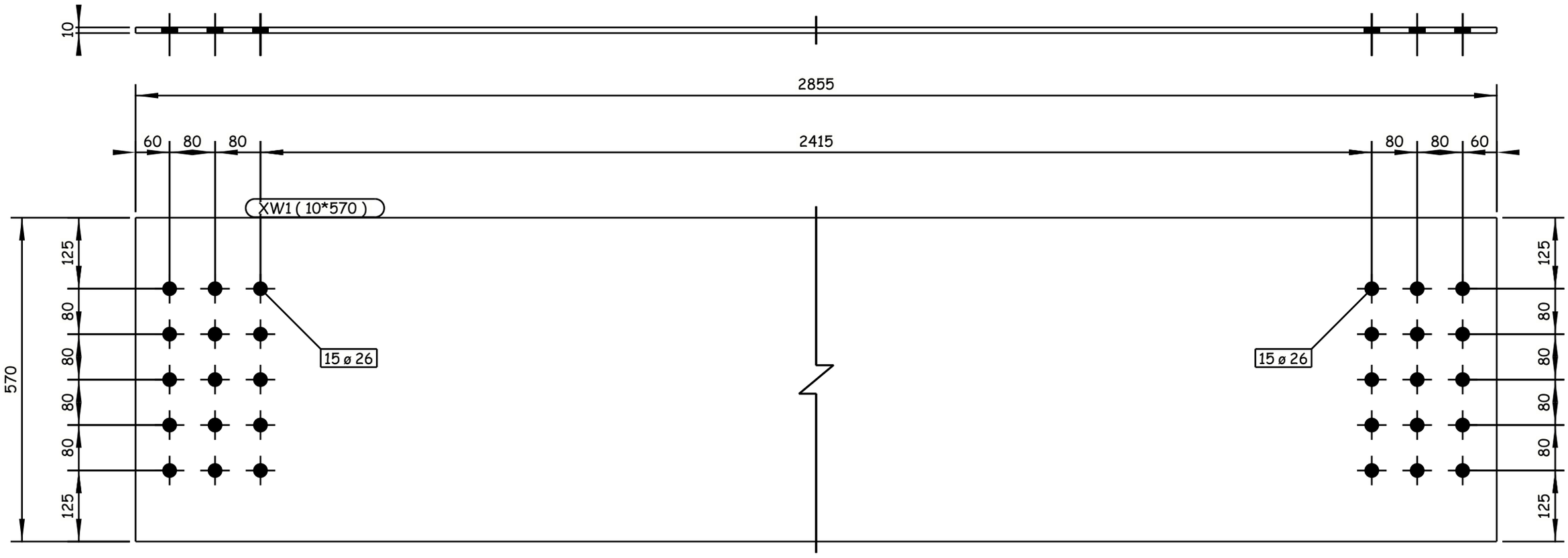

8 REQUIRED AS DRAWN E.SH XW1

GENERAL NOTES:

1. ALL DIMENSIONS ARE IN MILLIMETERS UNLESS OTHERWISE SPECIFIED.
2. LEVELS ARE IN METERS
3. DESIGN SERVICE LIFE OF 100 YEARS.
4. FLANGES OF TOP AND BOTTOM CHORDS TO BE SUPPLIED WITH IMPROVED THROUGH THICKNESS PROPERTIES Z25 ACCORDING TO EN10164.

REFERENCE DRAWINGS

1	93M-0407-SEN-6OL11-END-10118-B PAGE 01:17
2	
3	
4	
5	
6	
7	
8	
9	
10	
11	

6TH OF OCTOBER CITY RAIL TRANSIT MONORAIL &
NEW CAPITAL CITY RAIL TRANSIT MONORAIL

The Authority
Hill International
Authority Consultant

ORASCOM CONSTRUCTION
Main Contractor

BOMBARDIER
SENER
SHAKER CONSULTANCY GROUP
Designer

CONTRACTOR & CONSULTANT:
ENGINEERING HOUSE FOR CONSULTANCY

6 October Monorail
Engineering Unit
Valid For Construction

SCALE: AS SHOWN | CHK DRAWING | DATE: 20.11.2024

REV	DATE	BY	DESCRIPTION	CHK	APD
A	20-11-24	M.SH	ISSUE FOR APPROVAL	A.SH	M.M

DRAWING TITLE:
6TH OF OCTOBER MONORAIL
SHOP DRAWING FOR BRIDGE 6OL11-37
STEEL TRUSS (I).
XW1

Project Code	Rubric	Initiator	Lot	Ref	Number	Revision
93M	0407	ACC	60L11	DWG	90173	A

Tekla structures

-Drawing shall be updated according to the comments on the GA drawing.
-Approval is subjected to the approval of coordination package between multi-discipline.

REVIEWED WITH COMMENT MONORAILS PROJECT

All holes are 22mm U.N.O Length & Area & Weight per piece

Mark	Profile	Grade	QTY	Length	Area	Weight
XW2	PL10*570	S355J2N	12	945.0	1.07	40.9

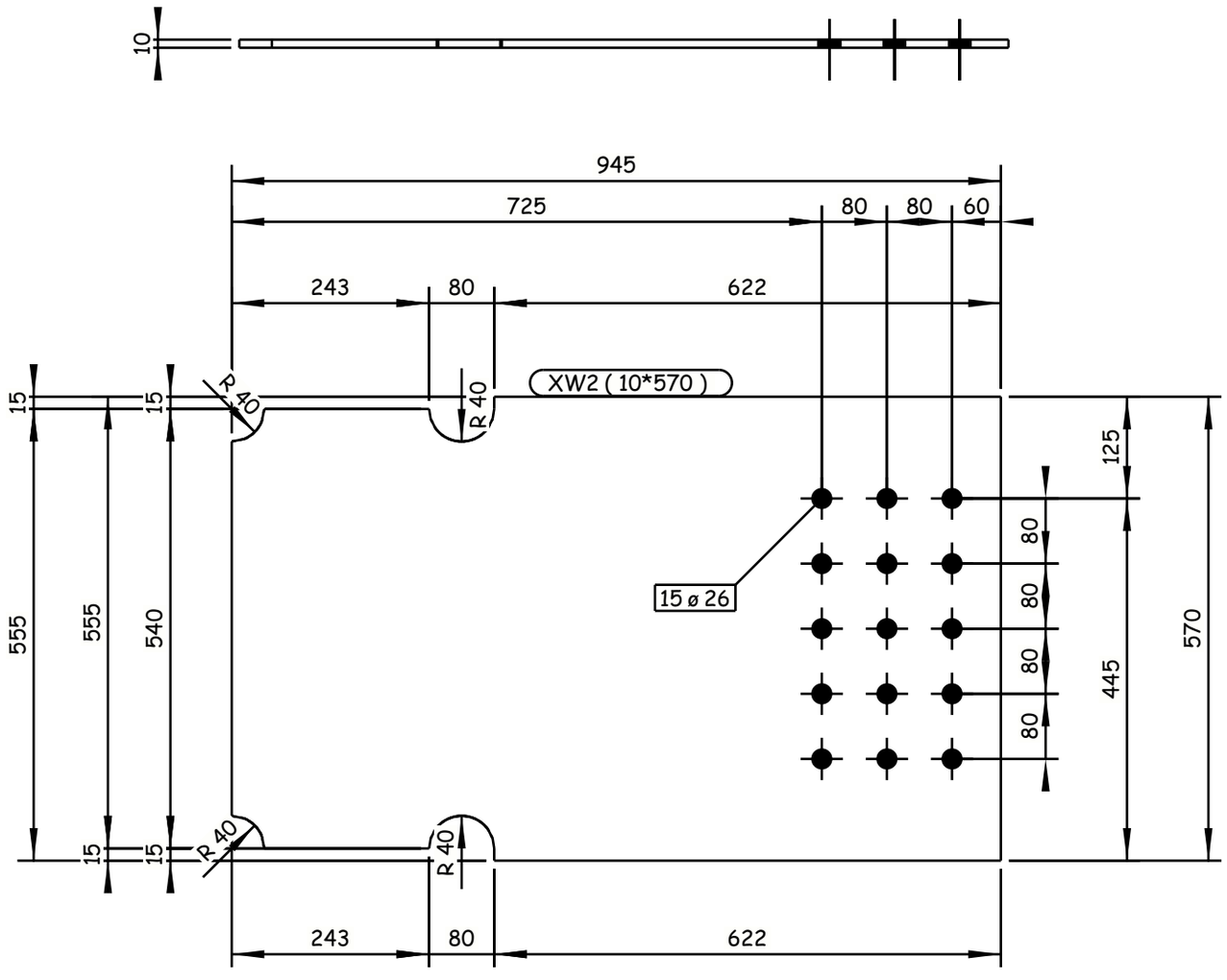

12 REQUIRED AS DRAWN E.SH XW2

6 October Monorail Engineering Unit
Valid For Construction

GENERAL NOTES:
1. ALL DIMENSIONS ARE IN MILLIMETERS UNLESS OTHERWISE SPECIFIED.
2. LEVELS ARE IN METERS
3. DESIGN SERVICE LIFE OF 100 YEARS.
4. FLANGES OF TOP AND BOTTOM CHORDS TO BE SUPPLIED WITH IMPROVED THROUGH THICKNESS PROPERTIES Z25 ACCORDING TO EN10164.

REFERENCE DRAWINGS

1	93M-0407-SEN-6OL11-END-10118-B PAGE 01:17
2	
3	
4	
5	
6	
7	
8	
9	
10	
11	

6TH OF OCTOBER CITY RAIL TRANSIT MONORAIL & NEW CAPITAL CITY RAIL TRANSIT MONORAIL

وزارة النقل MINISTRY OF TRANSPORT
The Authority
Hill International
Authority Consultant

ORASCOM CONSTRUCTION
BOMBARDIER
Main Contractor

SENER
SHAKER CONSULTANCY GROUP
Designer

CONTRACTOR CONSULTANT:
EHC ENGINEERING HOUSE FOR CONSULTANCY

SCALE AS SHOWN	SHOP DRAWING	DATE 20.11.2024

REV	DATE	BY	DESCRIPTION	CHK	APD
A	20-11-24	M.SH	ISSUE FOR APPROVAL	A.SH	M.M

DRAWING TITLE:
6TH OF OCTOBER MONORAIL
SHOP DRAWING FOR BRIDGE 6OL11-37
STEEL TRUSS (I).
XW2

Project Code	Rubric	Initiator	Lot	Ref	Number	Revision
9 3 M	0 4 0 7	A C C	6 0 L 1 1	D W G	90174	A

Tekla structures

-Drawing shall be updated according to the comments on the GA drawing.
-Approval is subjected to the approval of coordination package between multi-discipline.

REVIEWED WITH COMMENT
MONORAILS PROJECT

All holes are 22mm U.N.O Length & Area & Weight per piece

Mark	Profile	Grade	QTY	Length	Area	Weight
XW3	PL10*570	S355J2N	4	945.0	1.05	40.2

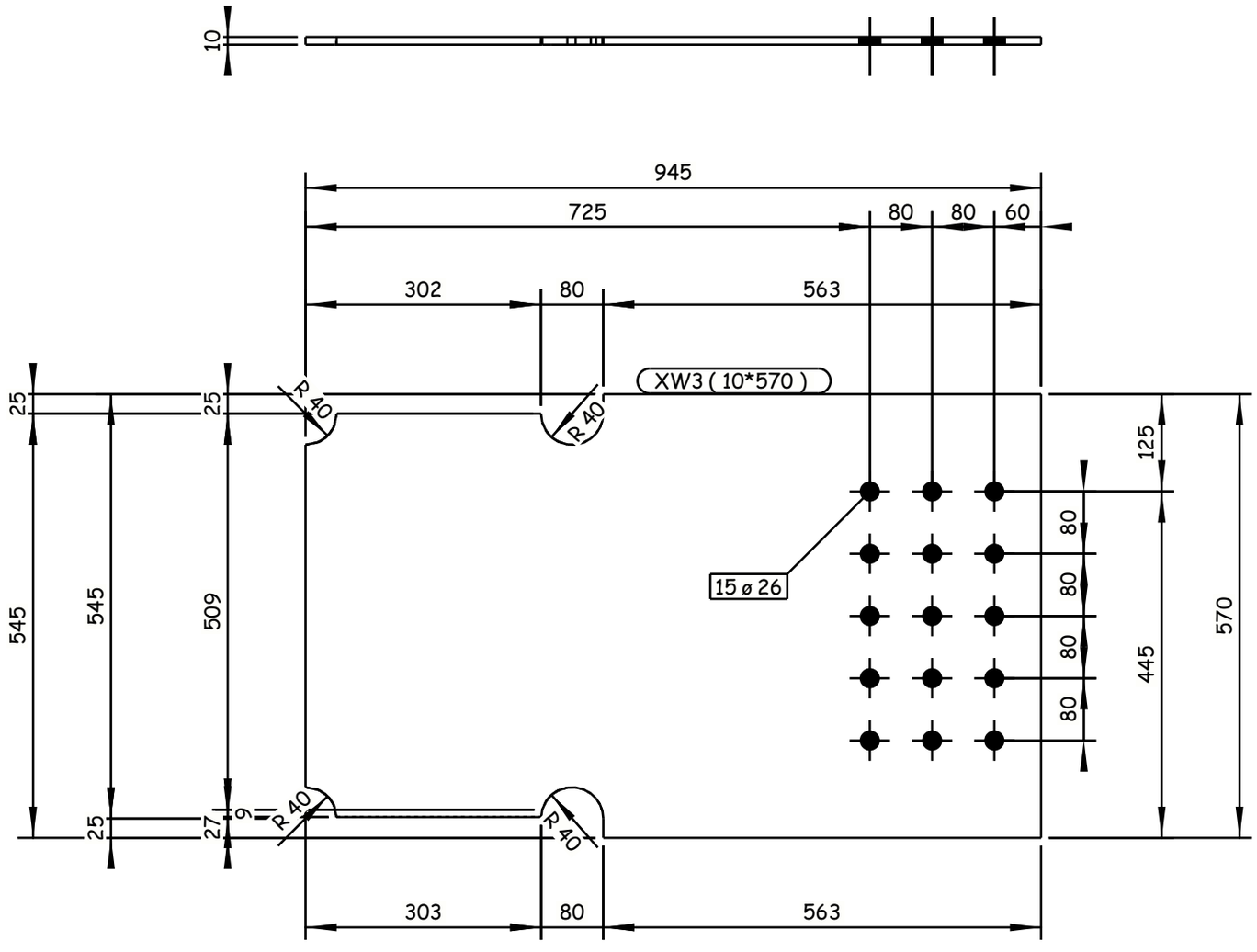

4 REQUIRED AS DRAWN E.SH XW3

6 October Monorail
Engineering Unit
Valid For Construction

GENERAL NOTES:

1. ALL DIMENSIONS ARE IN MILLIMETERS UNLESS OTHERWISE SPECIFIED.
2. LEVELS ARE IN METERS
3. DESIGN SERVICE LIFE OF 100 YEARS.
4. FLANGES OF TOP AND BOTTOM CHORDS TO BE SUPPLIED WITH IMPROVED THROUGH THICKNESS PROPERTIES Z25 ACCORDING TO EN10164.

REFERENCE DRAWINGS

1	93M-0407-SEN-6OL11-END-10118-B PAGE 01:17
2	
3	
4	
5	
6	
7	
8	
9	
10	
11	

6TH OF OCTOBER CITY RAIL TRANSIT MONORAIL &
NEW CAPITAL CITY RAIL TRANSIT MONORAIL

The Authority
Hill International
Authority Consultant

ORASCOM CONSTRUCTION
Main Contractor

BOMBARDIER
SENER
SHAKER CONSULTANCY GROUP
Designer

CONTRACTOR & CONSULTANT:
ENGINEERING HOUSE FOR CONSULTANCY

SCALE: AS SHOWN | CHK'D DRAWING | DATE: 20.11.2024

REV	DATE	BY	DESCRIPTION	CHK	APD
A	20-11-24	M.SH	ISSUE FOR APPROVAL	A.SH	M.M

DRAWING TITLE:
6TH OF OCTOBER MONORAIL
SHOP DRAWING FOR BRIDGE 6OL11-37
STEEL TRUSS (I).
XW3

Project Code	Rubric	Initiator	Lot	Ref	Number	Revision
9 3 M	0 4 0 7	A C C	6 0 L 1 1	D W G	90175	A

Tekla structures

-Drawing shall be updated according to the comments on the GA drawing.
-Approval is subjected to the approval of coordination package between multi-discipline.

REVIEWED WITH COMMENT
MONORAILS PROJECT

All holes are 22mm U.N.O Length & Area & Weight per piece

Mark	Profile	Grade	QTY	Length	Area	Weight
XW4	PL10*550	S355J2N	7	2840.0	3.19	122.6

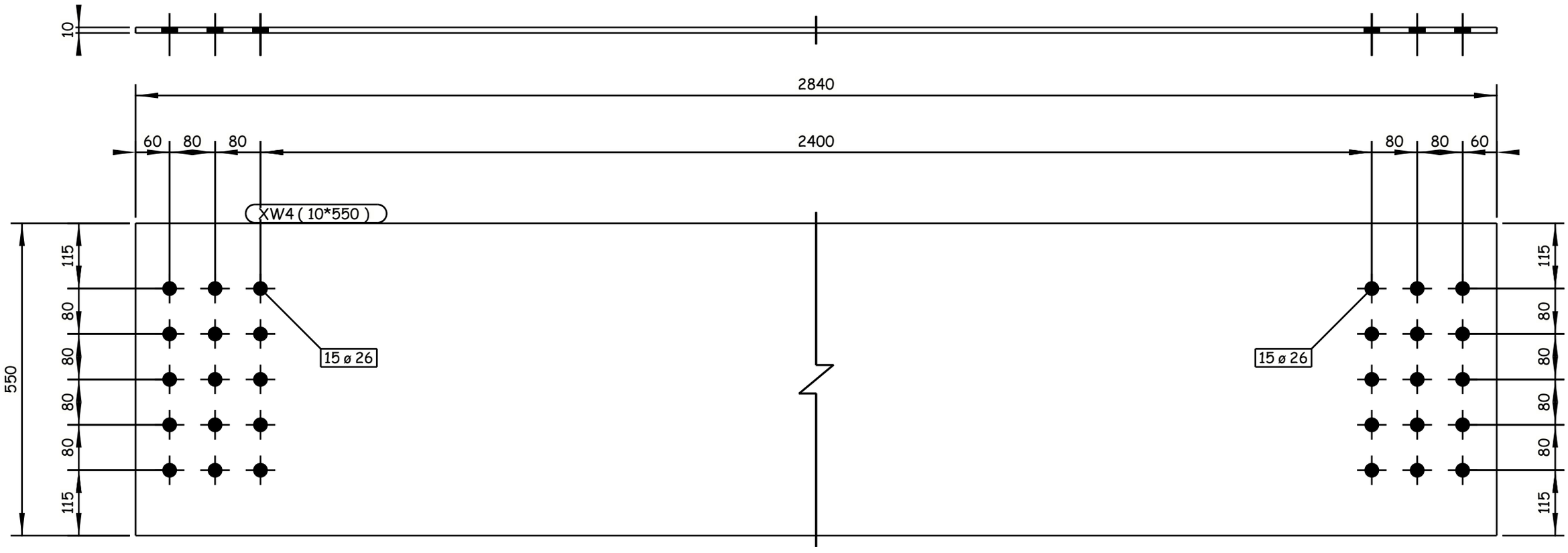

7 REQUIRED AS DRAWN E.SH XW4

GENERAL NOTES:

1. ALL DIMENSIONS ARE IN MILLIMETERS UNLESS OTHERWISE SPECIFIED.
2. LEVELS ARE IN METERS
3. DESIGN SERVICE LIFE OF 100 YEARS.
4. FLANGES OF TOP AND BOTTOM CHORDS TO BE SUPPLIED WITH IMPROVED THROUGH THICKNESS PROPERTIES Z25 ACCORDING TO EN10164.

REFERENCE DRAWINGS

1	93M-0407-SEN-6OL11-END-10118-B PAGE 01:17
2	
3	
4	
5	
6	
7	
8	
9	
10	
11	

6TH OF OCTOBER CITY RAIL TRANSIT MONORAIL &
NEW CAPITAL CITY RAIL TRANSIT MONORAIL

The Authority
Hill International
Authority Consultant

ORASCOM CONSTRUCTION
Main Contractor

BOMBARDIER
SENER
SHAKER CONSULTANCY GROUP
Designer

CONTRACTOR / CONSULTANT:
ENGINEERING HOUSE FOR CONSULTANCY

6 October Monorail
Engineering Unit
Valid For Construction

REV	DATE	BY	DESCRIPTION	CHK	APD
A	20-11-24	M.SH	ISSUE FOR APPROVAL	A.SH	M.M

SCALE: AS SHOWN
CHK DRAWING
DATE: 20.11.2024

DRAWING TITLE:
6TH OF OCTOBER MONORAIL
SHOP DRAWING FOR BRIDGE 6OL11-37
STEEL TRUSS (I).
XW4

Project Code	Rubric	Initiator	Lot	Ref	Number	Revision
93M	0407	ACC	60L11	DWG	90176	A

Tekla structures

-Drawing shall be updated according to the comments on the GA drawing.
-Approval is subjected to the approval of coordination package between multi-discipline.

REVIEWED WITH COMMENT
MONORAILS PROJECT

All holes are 22mm U.N.O Length & Area & Weight per piece

Mark	Profile	Grade	QTY	Length	Area	Weight
XW5	PL10*550	S355J2N	8	952.5	1.07	40.9

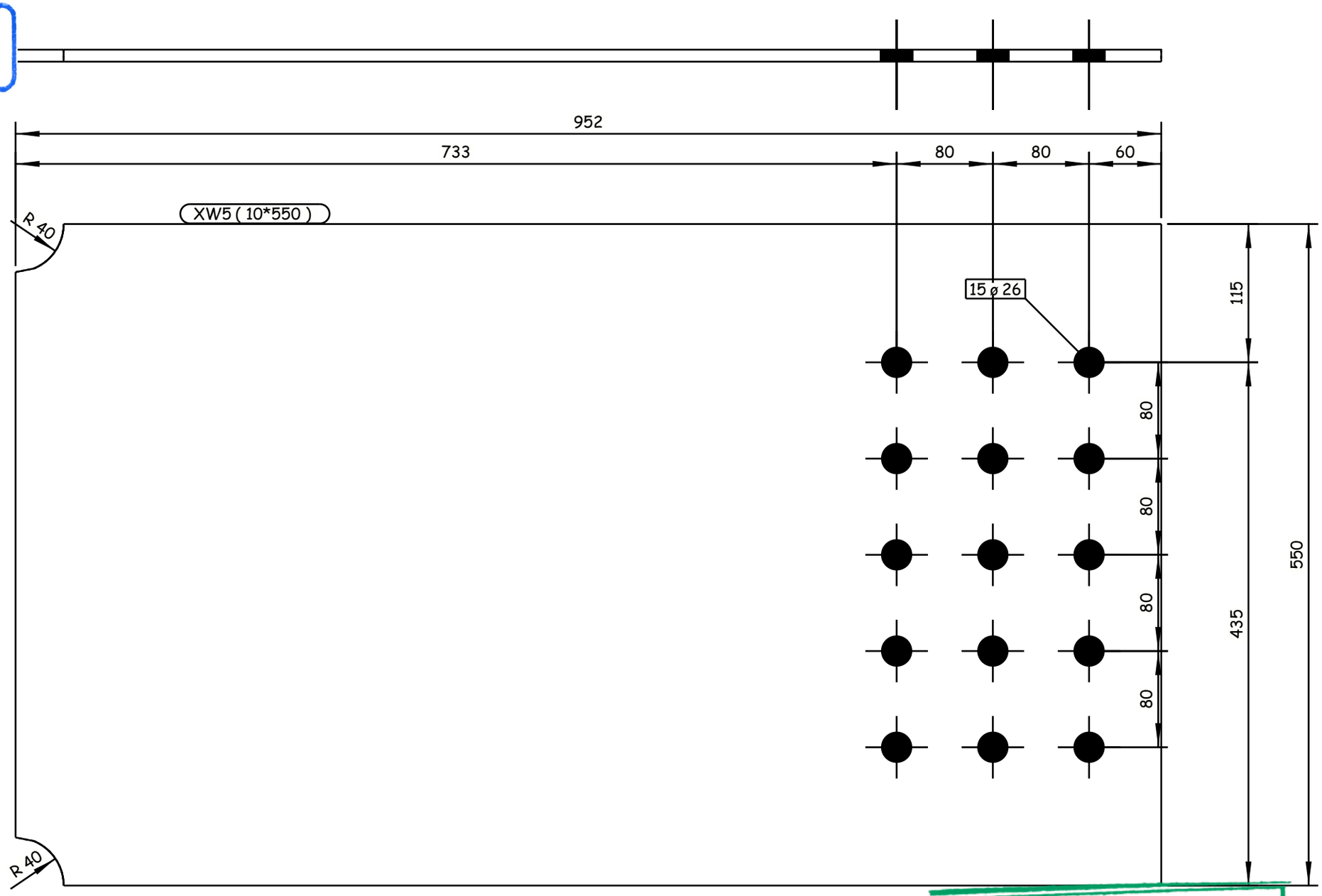

8 REQUIRED AS DRAWN E.SH XW5

GENERAL NOTES:

1. ALL DIMENSIONS ARE IN MILLIMETERS UNLESS OTHERWISE SPECIFIED.
2. LEVELS ARE IN METERS
3. DESIGN SERVICE LIFE OF 100 YEARS.
4. FLANGES OF TOP AND BOTTOM CHORDS TO BE SUPPLIED WITH IMPROVED THROUGH THICKNESS PROPERTIES Z25 ACCORDING TO EN10164.

REFERENCE DRAWINGS

1	93M-0407-SEN-6OL11-END-10118-B PAGE 01:17
2	
3	
4	
5	
6	
7	
8	
9	
10	
11	

6TH OF OCTOBER CITY RAIL TRANSIT MONORAIL &
NEW CAPITAL CITY RAIL TRANSIT MONORAIL

The Authority | Hill International Authority Consultant | ORASCOM CONSTRUCTION | BOMBARDIER (Main Contractor) | SENER | SHAKER CONSULTANCY GROUP (Designer)

CONTRACTOR & CONSULTANT:
ENGINEERING HOUSE FOR CONSULTANCY

6 October Monorail
Engineering Unit
Valid For Construction

REV	DATE	BY	DESCRIPTION	CHK	APD
A	20-11-24	M.SH	ISSUE FOR APPROVAL	A.SH	M.M

SCALE: AS SHOWN | SHOP DRAWING | DATE: 20.11.2024

DRAWING TITLE:
6TH OF OCTOBER MONORAIL
SHOP DRAWING FOR BRIDGE 6OL11-37
STEEL TRUSS (I).
XW5

Project Code	Rubric	Initiator	Lot	Ref	Number	Revision
93M	0407	ACC	6OL11	DWG	90177	A

Tekla structures

-Drawing shall be updated according to the comments on the GA drawing.
-Approval is subjected to the approval of coordination package between multi-discipline.

REVIEWED WITH COMMENT
MONORAILS PROJECT

All holes are 22mm U.N.O Length & Area & Weight per piece

Mark	Profile	Grade	QTY	Length	Area	Weight
XW6	PL10*550	S355J2N	4	952.5	1.07	40.7

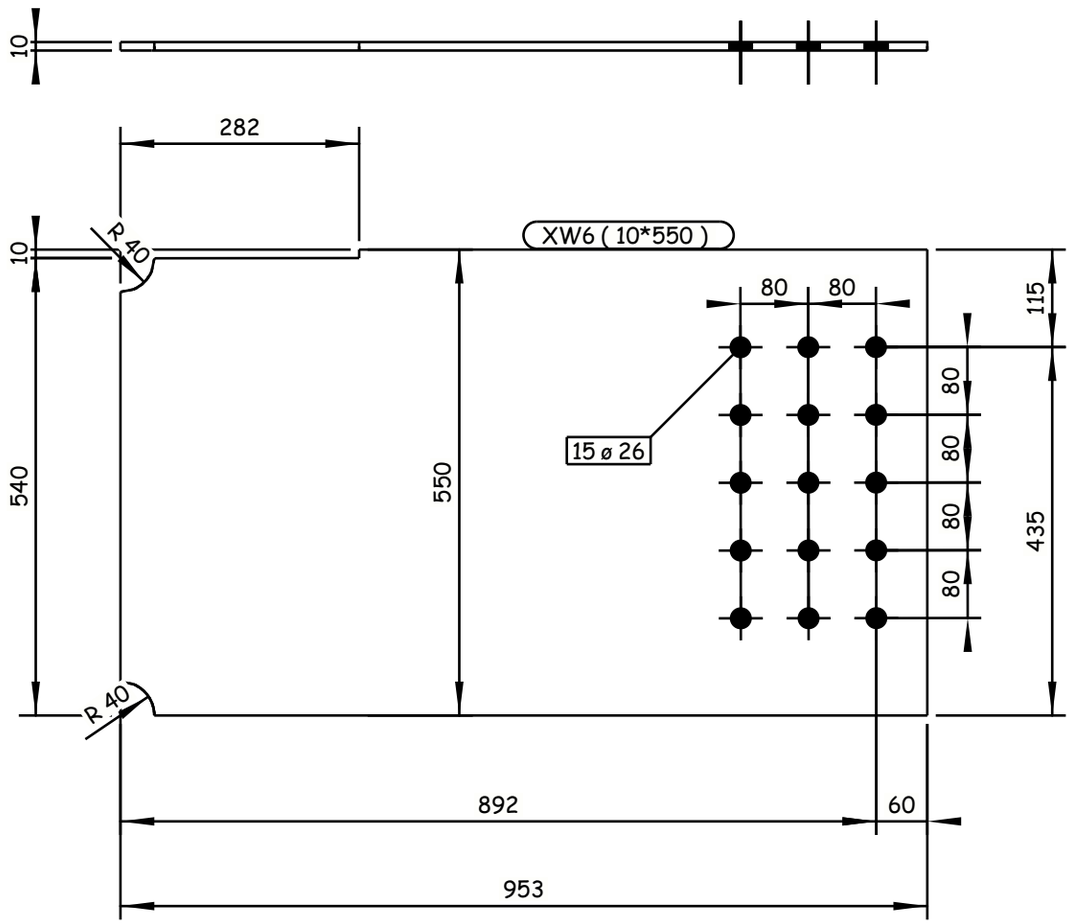

4 REQUIRED AS DRAWN E.SH XW6

Tekla structures

GENERAL NOTES:

1. ALL DIMENSIONS ARE IN MILLIMETERS UNLESS OTHERWISE SPECIFIED.
2. LEVELS ARE IN METERS
3. DESIGN SERVICE LIFE OF 100 YEARS.
4. FLANGES OF TOP AND BOTTOM CHORDS TO BE SUPPLIED WITH IMPROVED THROUGH THICKNESS PROPERTIES Z25 ACCORDING TO EN10164.

REFERENCE DRAWINGS

1	93M-0407-SEN-6OL11-END-10118-B PAGE 01:17
2	
3	
4	
5	
6	
7	
8	
9	
10	
11	

6TH OF OCTOBER CITY RAIL TRANSIT MONORAIL &
NEW CAPITAL CITY RAIL TRANSIT MONORAIL

The Authority
Hill International
Authority Consultant

Main Contractor

Designer

CONTRACTOR
CONSULTANT:

ENGINEERING HOUSE FOR CONSULTANCY

6 October Monorail
Engineering Unit
Valid For Construction

SCALE	SHOP DRAWING	DATE
AS SHOWN		20.11.2024

DRAWING TITLE:
6TH OF OCTOBER MONORAIL
SHOP DRAWING FOR BRIDGE 6OL11-37
STEEL TRUSS (I).
XW6

REV	DATE	BY	DESCRIPTION	CHK	APD
A	20-11-24	M.SH	ISSUE FOR APPROVAL	A.SH	M.M

Project Code	Rubric	Initiator	Lot	Ref	Number	Revision
93M	0407	ACC	60L11	DWG	90178	A

-Drawing shall be updated according to the comments on the GA drawing.
-Approval is subjected to the approval of coordination package between multi-discipline.

REVIEWED WITH COMMENT
MONORAILS PROJECT

All holes are 22mm U.N.O Length & Area & Weight per piece						
XW7	PL10*550	S355J2N	2	952.5	1.07	40.7
Mark	Profile	Grade	QTY	Length	Area	Weight

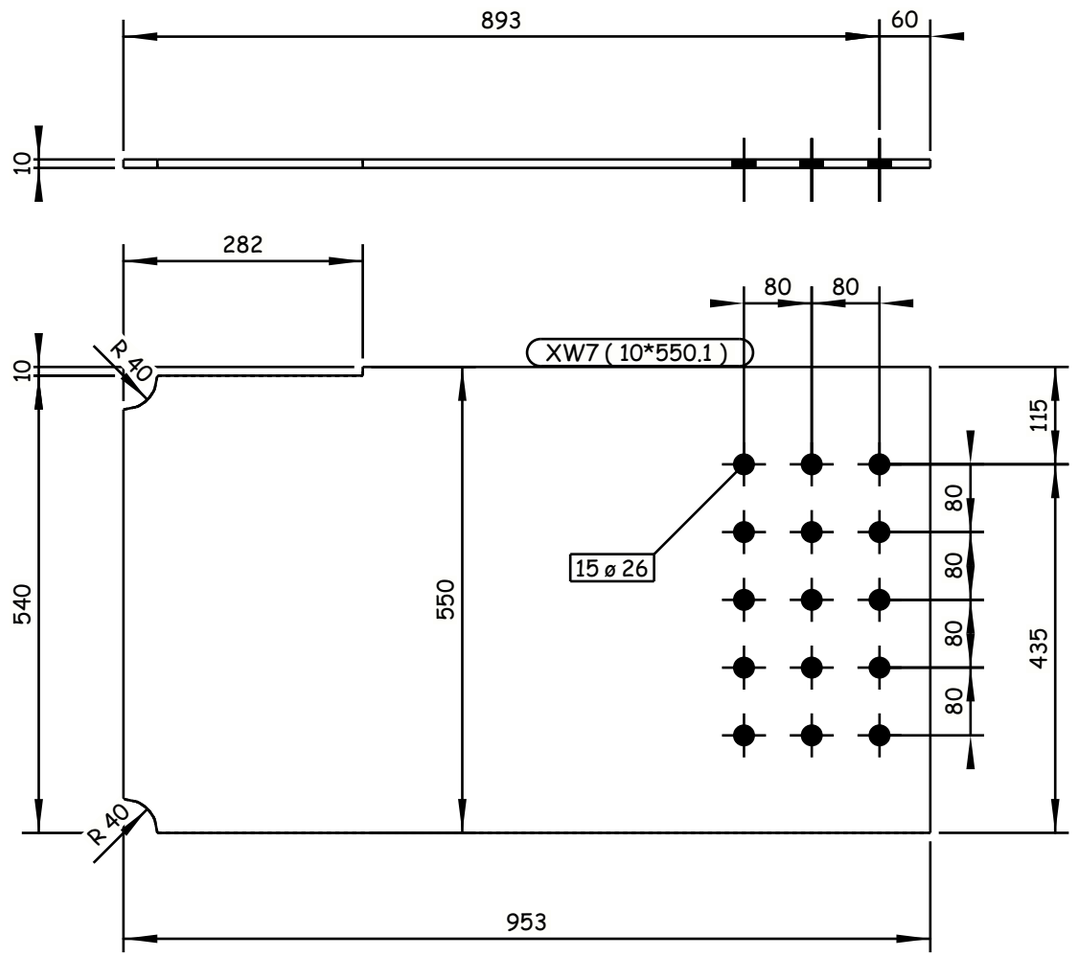

2 REQUIRED AS DRAWN E.SH XW7

6 October Monorail
Engineering Unit
Valid For Construction

GENERAL NOTES:

1. ALL DIMENSIONS ARE IN MILLIMETERS UNLESS OTHERWISE SPECIFIED.
2. LEVELS ARE IN METERS
3. DESIGN SERVICE LIFE OF 100 YEARS.
4. FLANGES OF TOP AND BOTTOM CHORDS TO BE SUPPLIED WITH IMPROVED THROUGH THICKNESS PROPERTIES Z25 ACCORDING TO EN10164.

REFERENCE DRAWINGS

1	93M-0407-SEN-6OL11-END-10118-B PAGE 01:17
2	
3	
4	
5	
6	
7	
8	
9	
10	
11	

6TH OF OCTOBER CITY RAIL TRANSIT MONORAIL &
NEW CAPITAL CITY RAIL TRANSIT MONORAIL

The Authority
Hill International
Authority Consultant

Main Contractor

Designer

CONTRACTOR / CONSULTANT :
ENGINEERING HOUSE FOR CONSULTANCY

SCALE: AS SHOWN | SHD DRAWING | DATE: 20.11.2024

DRAWING TITLE:
6TH OF OCTOBER MONORAIL
SHOP DRAWING FOR BRIDGE 6OL11-37
STEEL TRUSS (I).
XW7

REV	DATE	BY	DESCRIPTION	CHK	APD
A	20-11-24	M.SH	ISSUE FOR APPROVAL	A.SH	M.M

Project Code	Rubric	Initiator	Lot	Ref	Number	Revision
93M	0407	ACC	6OL11	DWG	90179	A

Tekla structures

- It is the contractor responsibility to ensure and revise all Dimensions and levels with the approved design drawings besides the coordination package before commencing any site Works.

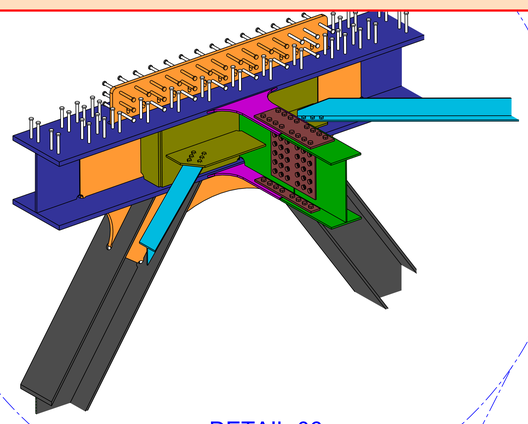

DETAIL-06

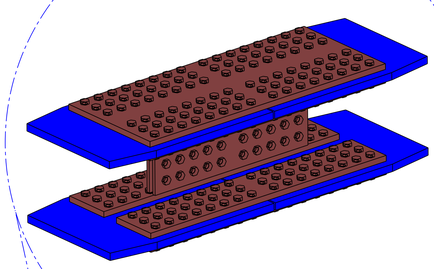

DETAIL-11

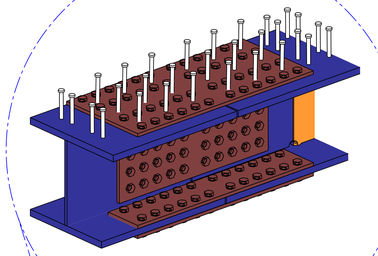

DETAIL-12

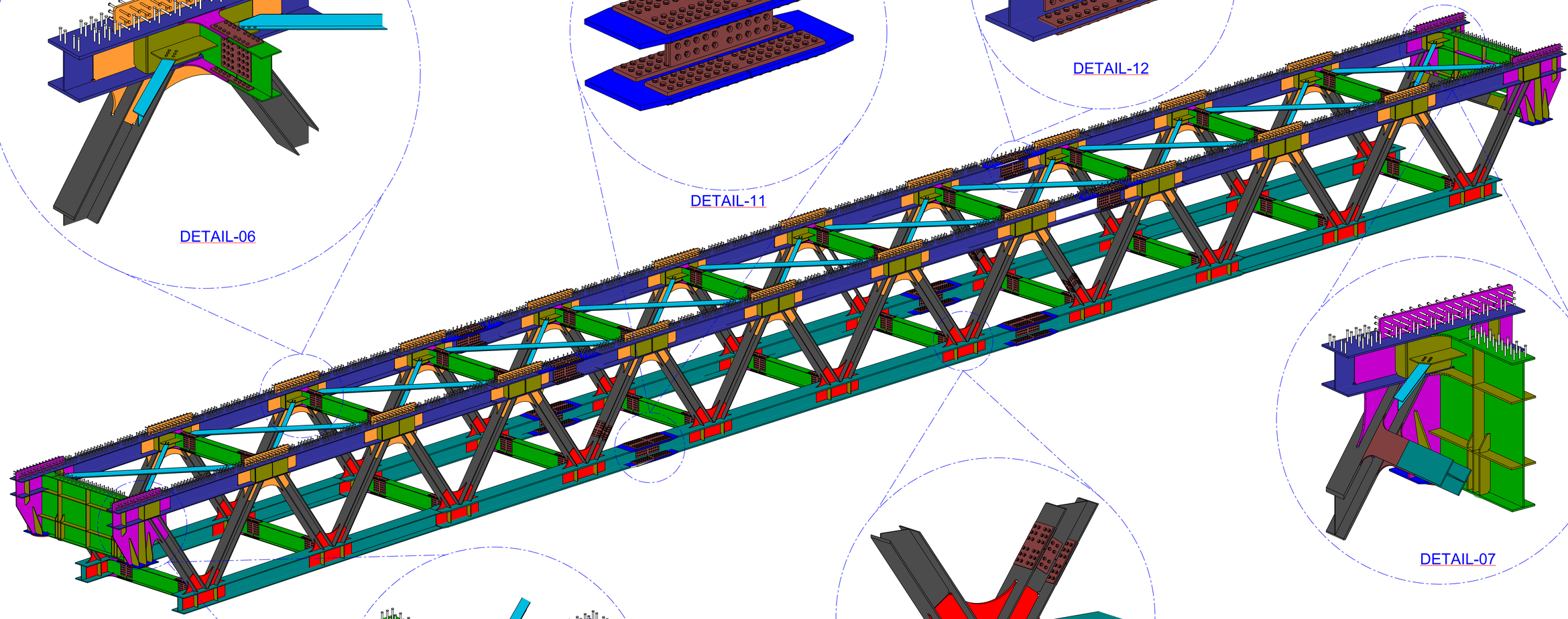

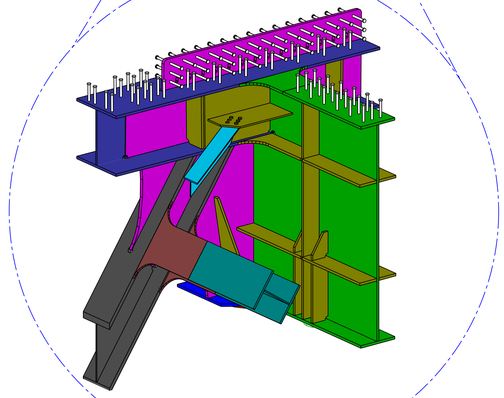

DETAIL-07

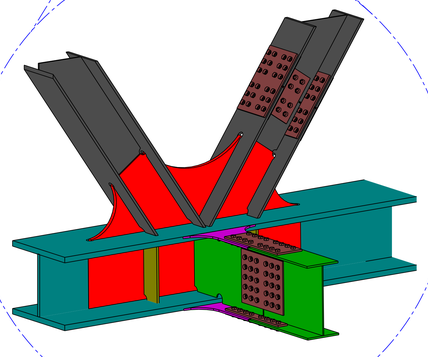

DETAIL-04A

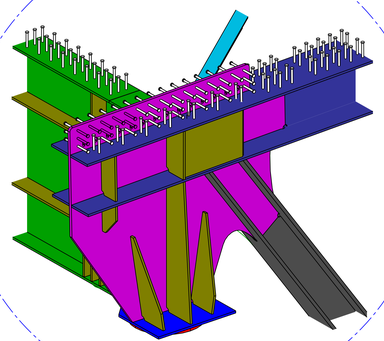

DETAIL-07

REVIEWED WITH COMMENT MONORAILS PROJECT

GENERAL NOTES:

1. ALL DIMENSIONS ARE IN MILLIMETERS UNLESS OTHERWISE SPECIFIED.
2. LEVELS ARE IN METERS
3. DESIGN SERVICE LIFE OF 100 YEARS.
4. FLANGES OF TOP AND BOTTOM CHORDS TO BE SUPPLIED WITH IMPROVED THROUGH THICKNESS PROPERTIES Z25 ACCORDING TO EN10164.

REFERENCE DRAWINGS

1	93M-0407-SEN-6OL11-END-10118-B PAGE 01:17
2	
3	
4	
5	
6	
7	
8	
9	
10	
11	

6TH OF OCTOBER CITY RAIL TRANSIT MONORAIL & NEW CAPITAL CITY RAIL TRANSIT MONORAIL

The Authority — Hill International — Authority Consultant

ORASCOM CONSTRUCTION — BOMBARDIER — Main Contractor

SENER — SHAKER CONSULTANCY GROUP — Designer

6 October Monorail Engineering Unit Valid For Construction

CONTRACTOR / CONSULTANT: EHC ENGINEERING HOUSE FOR CONSULTANCY

SCALE: AS SHOWN | SHOP DRAWING | DATE: 20.11.2024

REV	DATE	BY	DESCRIPTION	CHK	APD
A	20-11-24	E.SH	ISSUE FOR APPROVAL	A.SH	M.M

DRAWING TITLE:
6TH OF OCTOBER MONORAIL
SHOP DRAWING FOR BRIDGE 6OL11-37
STEEL TRUSS (II).
3D VIEW

Project Code	Rubric	Initiator	Lot	Ref	Number	Revision
93M	0407	AAC	6OL11	DWG	90180	A

-Approval is subjected to the approval of coordination package between multi-discipline.

REVIEWED WITH COMMENT
MONORAILS PROJECT

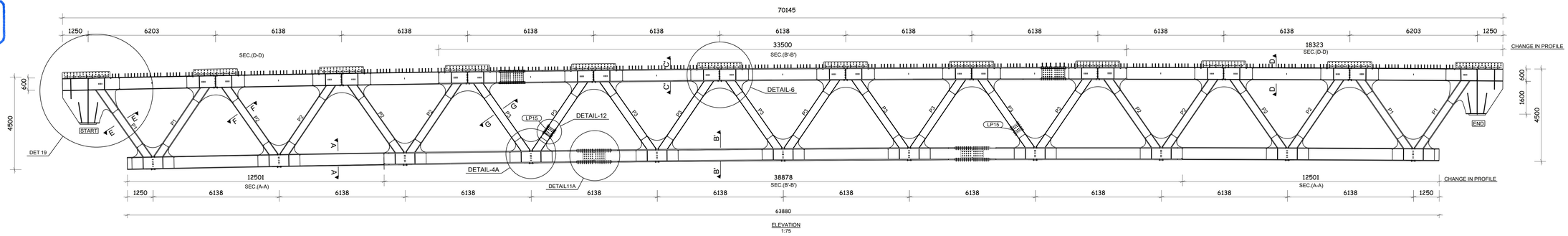

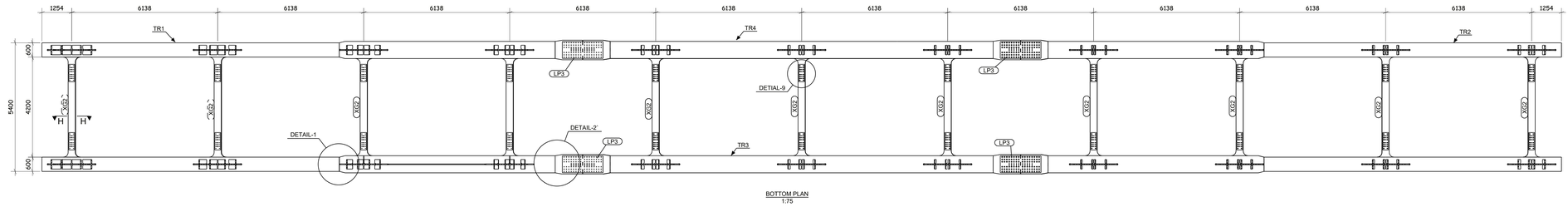

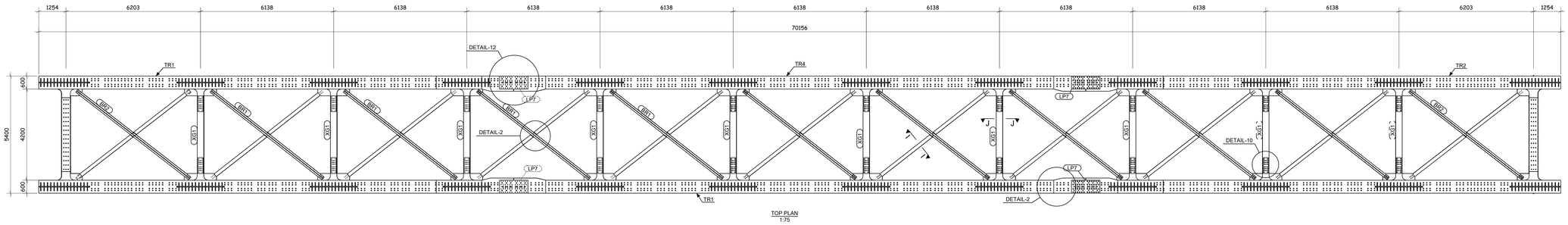

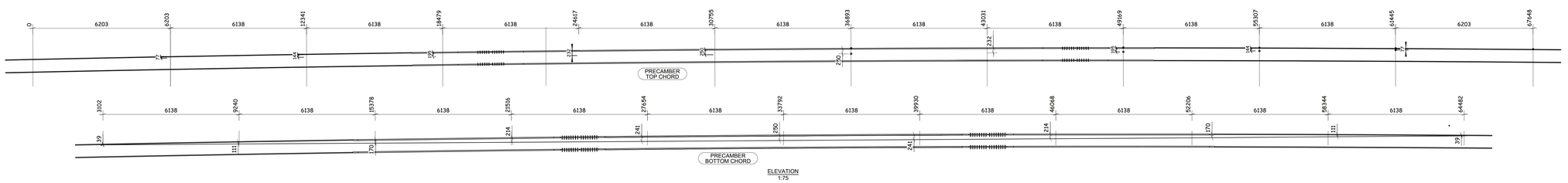

Clear this view

STRUCTURAL STEEL
- PLATES:
t ≤ 40mm S355J2N [EN 10025 : 2018]
t > 40mm S355K2N [EN 10025 : 2018]
- SHAPES (1/2 IPE 330)
S355J0N [EN 10025:2018]

SHEAR CONNECTOR
STUD 22□ h=175mm
S235J2G3+C450
ST37-3K
DIN17100

GENERAL NOTES:

1. ALL DIMENSIONS ARE IN MILLIMETERS UNLESS OTHERWISE SPECIFIED.
2. LEVELS ARE IN METERS
3. DESIGN SERVICE LIFE OF 100 YEARS.
4. FLANGES OF TOP AND BOTTOM CHORDS TO BE SUPPLIED WITH IMPROVED THROUGH THICKNESS PROPERTIES Z25 ACCORDING TO EN10164.

REFERENCE DRAWINGS

1	93M-0407-SEN-6OL11-END-10118-B PAGE 01:17
2	
3	
4	
5	
6	
7	
8	
9	
10	
11	

6TH OF OCTOBER CITY RAIL TRANSIT MONORAIL &
NEW CAPITAL CITY RAIL TRANSIT MONORAIL

The Authority
Hill International
Authority Consultant
Main Contractor
Designer

CONTRACTOR
CONSULTANT
ENGINEERING HOUSE FOR CONSULTANCY

SCALE: AS SHOWN | SHOP DRAWING | DATE: 20.11.2024

REV	DATE	BY	DESCRIPTION	CHK	APD
A	20-11-24	E.SH	ISSUE FOR APPROVAL	A.SH	M.M

6 October: Monorail Engineering Unit
Valid For Construction

DRAWING TITLE:
6TH OF OCTOBER MONORAIL
SHOP DRAWING FOR BRIDGE 6OL11-37
STEEL TRUSS (II).
GENERAL LAYOUT

Project Code	Rubric	Initiator	Lot	Ref	Number	Revision
93M	0407	AAC	6OL11	DWG	90181	A

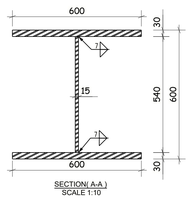

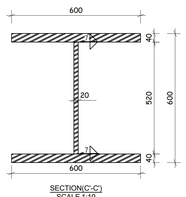

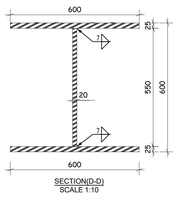

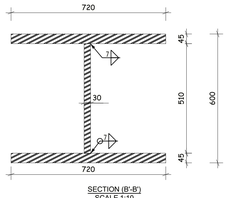

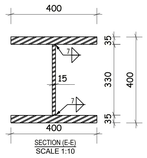

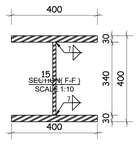

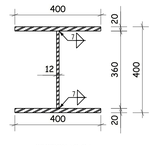

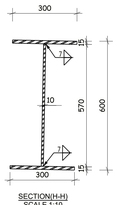

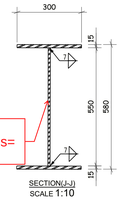

Web thickness= 10mm.

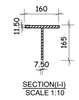

-Approval is subjected to the approval of coordination package between multi-discipline.

REVIEWED WITH COMMENT MONORAILS PROJECT

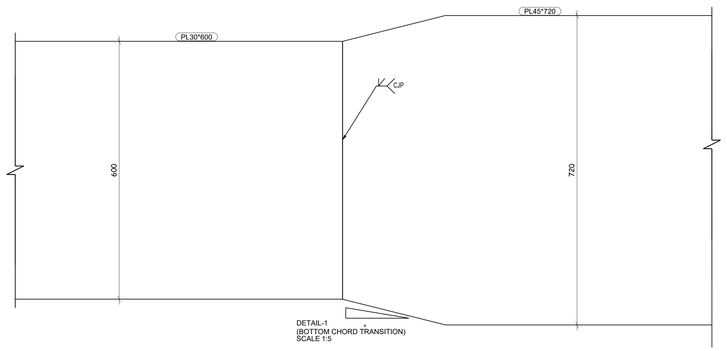

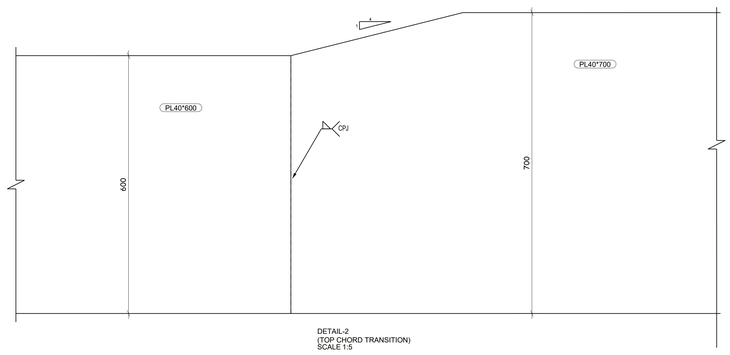

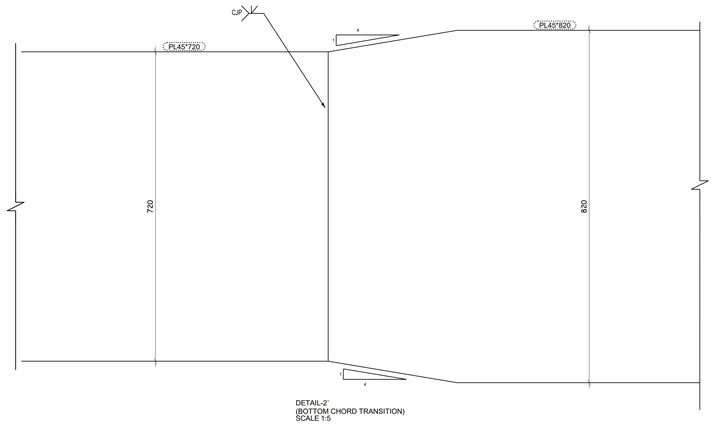

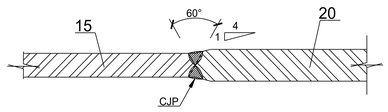

DETAIL WELD WEB TRANSITION
PL15mm TO PL20mm
(FOR CHORDS AND BRACE MEMBERS)

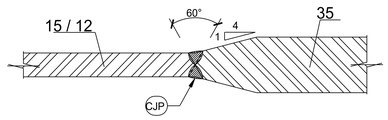

DETAIL WELD WEB TRANSITION
PL15 / 12mm TO PL35mm
(FOR CHORDS AND BRACE MEMBERS)

DETAIL WELD WEB TRANSITION
PL20mm TO PL35mm

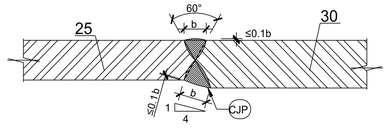

DETAIL WELD FLANGE TRANSITION
PL25mm TO PL30mm

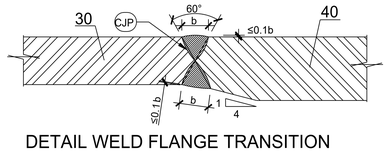

DETAIL WELD FLANGE TRANSITION
PL30mm TO PL40mm

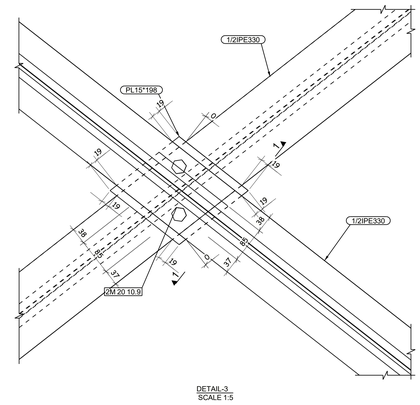
1/2IPE330
PL15*198
19
70
19
19
19

REVIEWED WITH COMMENT
MONORAILS PROJECT

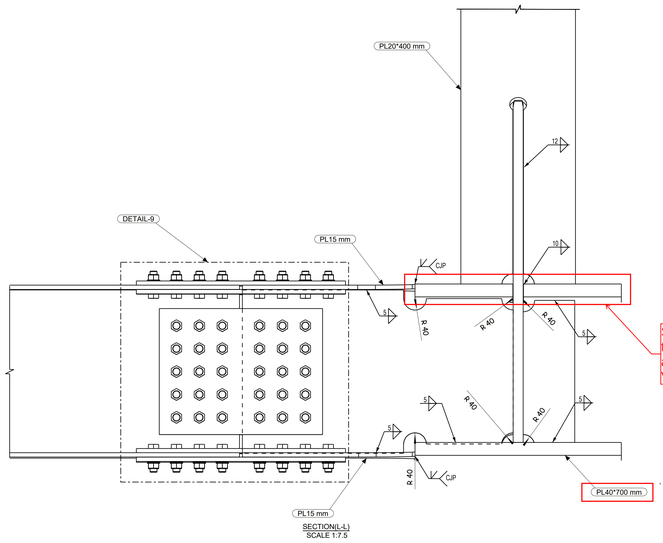

Should be PL45 as per the design reference and as shown in detail 4A View.

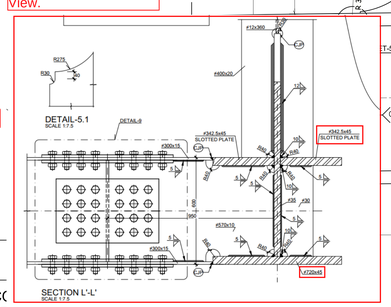

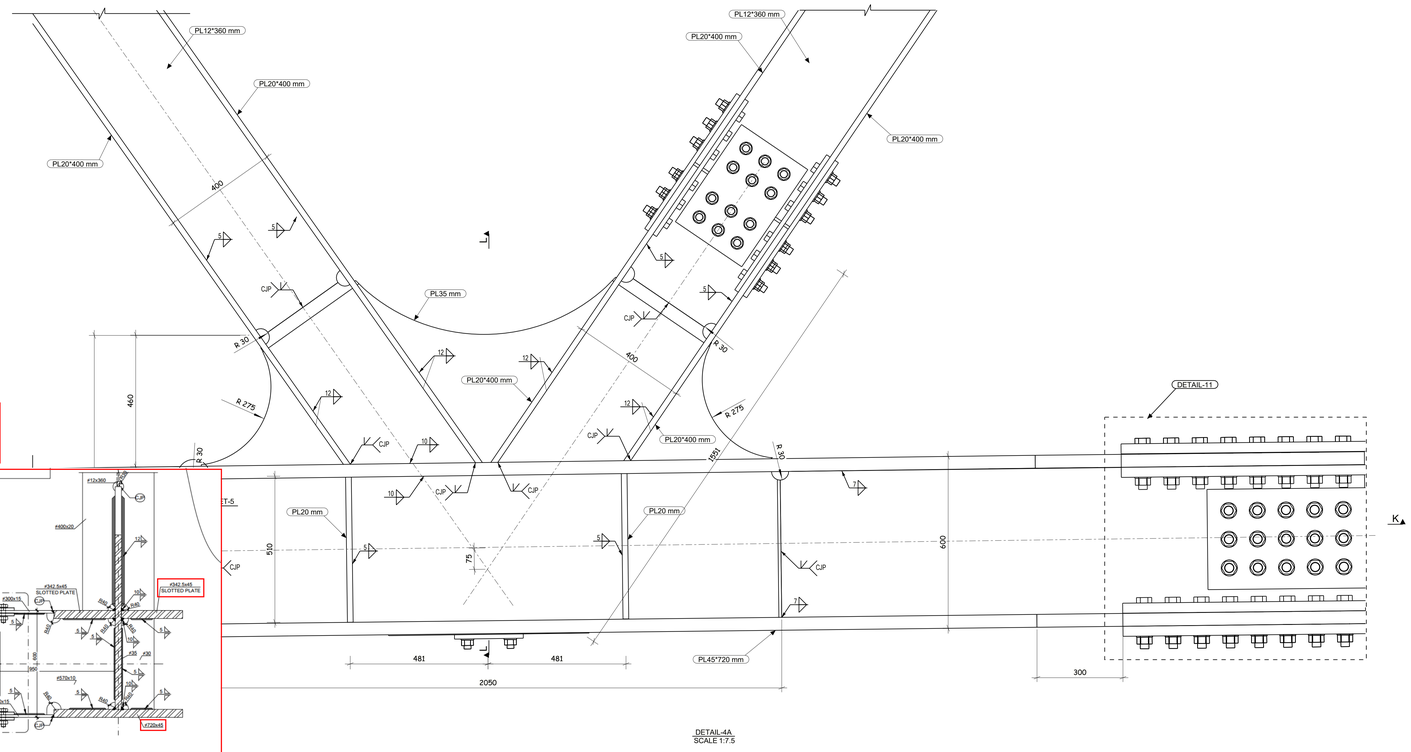

STRUCTURAL STEEL

- PLATES:
  - t ≤ 40mm S355J2N [EN 10025 : 2018]
  - t > 40mm S355K2N [EN 10025 : 2018]
- SHAPES (1/2 IPE 330)
  - S355J0N [EN 10025:2018]

SHEAR CONNECTOR

STUD ⅊22 h=175mm
S235J2G3+C450
ST37-3K
DIN17100

FILLET WELDS

- UNLESS NOTED OTHERWISE, ALL FILLET WELDS SHALL BE C(
- FILLET WELDS SHALL BE MADE FROM BOTH SIDES (SYMMETRICAL BEADS).
- EFFECTIVE THROAT THICKNESSES ARE DEFINED (THEY SHOULD BE MULTIPLIED BY 1.41 TO GET THE LEG LENGTHS).

GROOVE WELDS

- ALL GROOVE WELDS SHALL BE MADE COMPLETE JOINT PENETRATION (CJP). BUTT JOINTS SHALL BE MADE WITH RUN-OFF PLATES. RUN-OFF PLATES SHALL BE REMOVED AFTER WELDING, GROUNDING THE EDGE IN THE DIRECTION OF STRESSES.

- STEEL TO BE PAINTED IN ACCORDANCE WITH PROJECT SPECIFICATIONS. (CORROSIVITY CATEGORY C4 DURABILITY VERY HIGH)
- QUALITY CONTROL IN ACCORDANCE WITH PROJECT SPECIFICATIONS. (EXECUTION LEVEL EXC3 ACCORDING TO EN1090-2:2019)

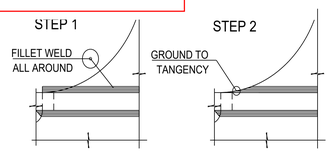

DETAIL-5

SYMBOL	DESCRIPTION
e →	FILLET WELD OF EFFECTIVE THROAT THICKNESS (e)mm.
e →	FILLET WELD OF EFFECTIVE THROAT THICKNESS (e)mm, BOTH SIDES.
PP →	PARTIAL PENETRATION WELD.
CJP →	COMPLETE JOINT PENETRATION.
→	ALL AROUND WELD.
	FIELD WELD.

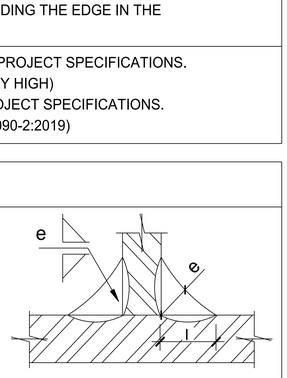

e=EFFECTIVE THROAT THICKNESS
l=LEG

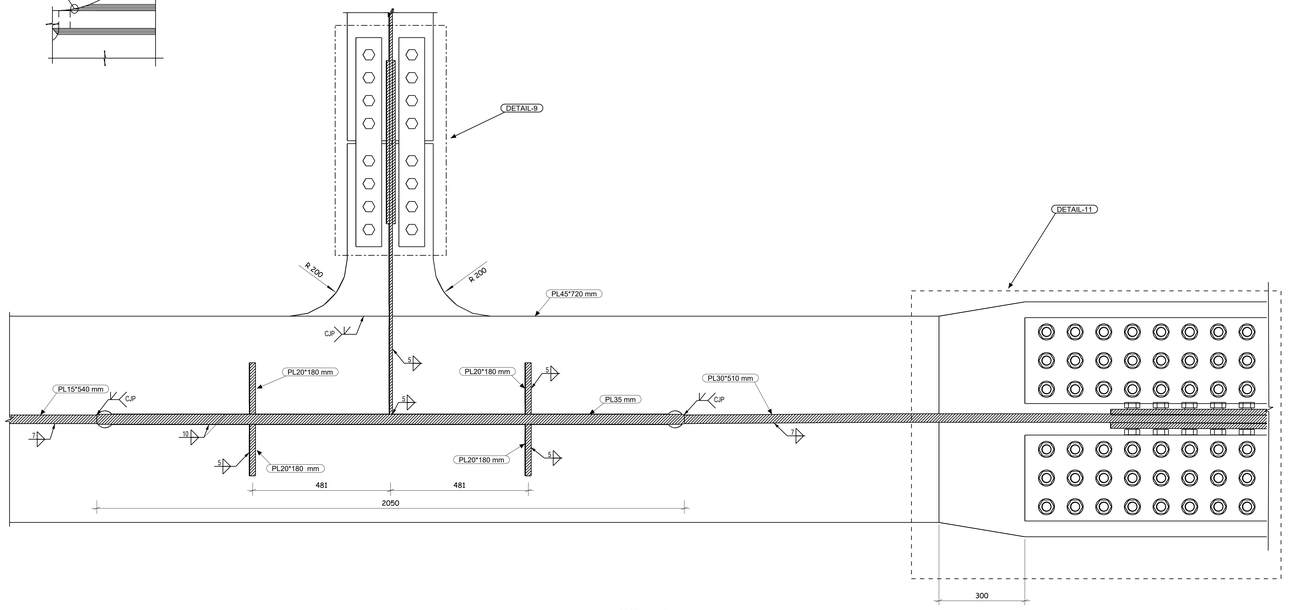

SECTION(K-K)
SCALE 1:7.5

GENERAL NOTES:

1. ALL DIMENSIONS ARE IN MILLIMETERS UNLESS OTHERWISE SPECIFIED.
2. LEVELS ARE IN METERS
3. DESIGN SERVICE LIFE OF 100 YEARS.
4. FLANGES OF TOP AND BOTTOM CHORDS TO BE SUPPLIED WITH IMPROVED THROUGH THICKNESS PROPERTIES Z25 ACCORDING TO EN10164.

REFERENCE DRAWINGS

1	93M-0407-SEN-6OL11-END-10118-B PAGE 01:17
2	
3	
4	
5	
6	
7	
8	
9	
10	
11	

6TH OF OCTOBER CITY RAIL TRANSIT MONORAIL &
NEW CAPITAL CITY RAIL TRANSIT MONORAIL

The Authority — Authority Consultant
Hill International
ORASCOM CONSTRUCTION — BOMBARDIER — Main Contractor
SENER — SHAKER CONSULTANCY GROUP — Designer

6 October Monorail
Engineering Unit
Valid For Construction

CONTRACTOR
CONSULTANT
ENGINEERING HOUSE FOR CONSULTANCY

SCALE	SHOP DRAWING	DATE
AS SHOWN		20.11.2024

REV	DATE	BY	DESCRIPTION	CHK	APD
A	20-11-24	E.SH	ISSUE FOR APPROVAL	A.SH	M.M

DRAWING TITLE:
6TH OF OCTOBER MONORAIL
SHOP DRAWING FOR BRIDGE 6OL11-37
STEEL TRUSS (II).
DETAIL-4A

Project Code	Rubric	Initiator	Lot	Ref	Number	Revision
93M	0407	AAC	6OL11	DWG	90183	A

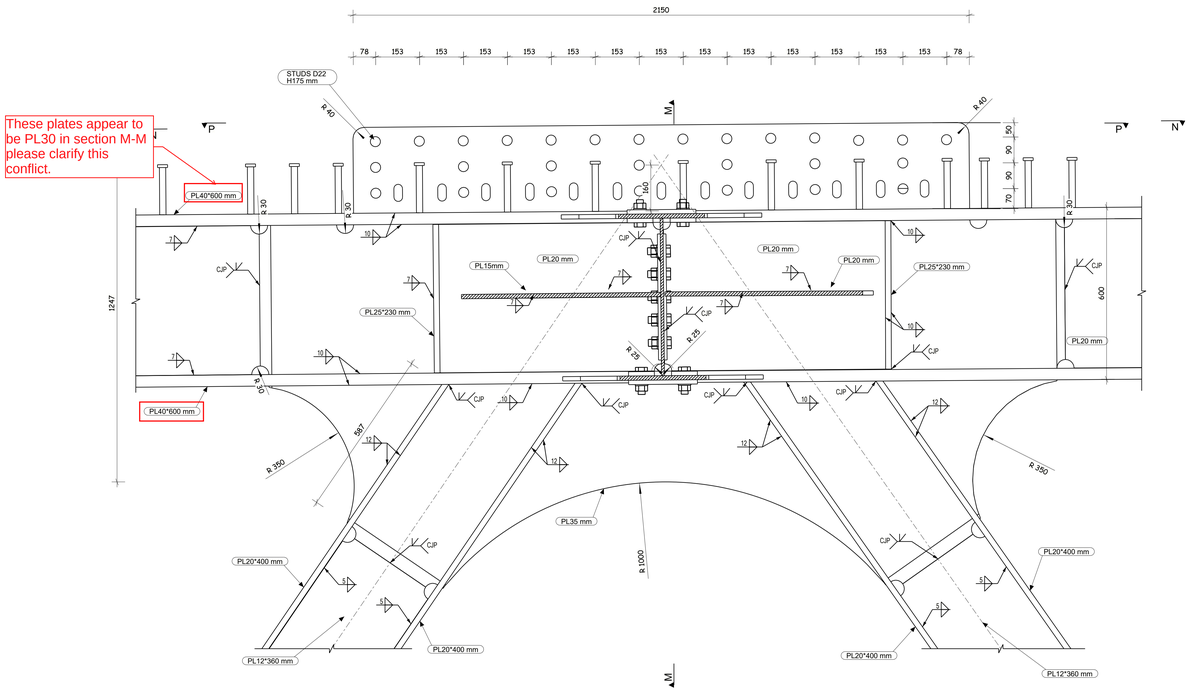

DETAIL-6
SCALE 1:7.5

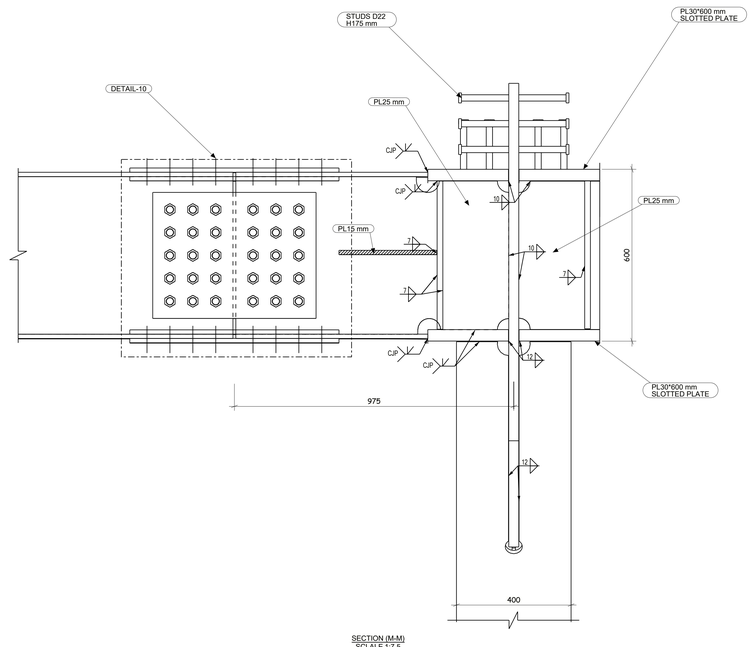

SECTION (M-M)
SCALE 1:7.5

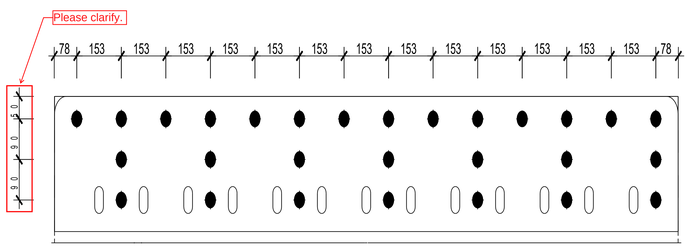

DISTRIBUTION OF HORIZONTAL STUDS
OUTER SIDE

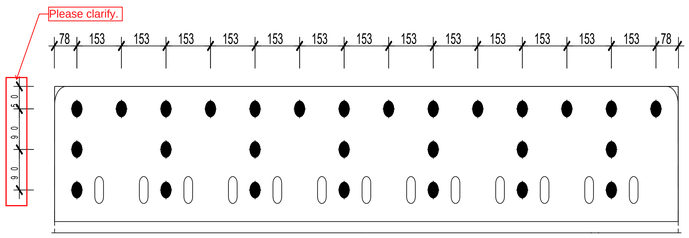

DISTRIBUTION OF HORIZONTAL STUDS
INNER SIDE

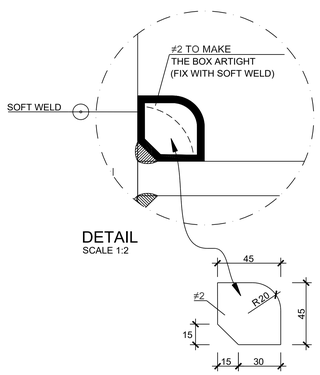

DETAIL
SCALE 1:2

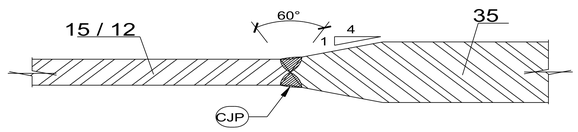

DETAIL WELD WEB TRANSITION
PL15 / 12mm TO PL35mm
(FOR CHORDS AND BRACE MEMBERS)

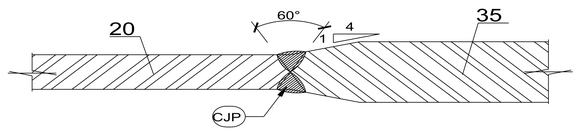

DETAIL WELD WEB TRANSITION
PL20mm TO PL35mm

REVIEWED WITH COMMENT MONORAILS PROJECT

GENERAL NOTES:

1. ALL DIMENSIONS ARE IN MILLIMETERS UNLESS OTHERWISE SPECIFIED.
2. LEVELS ARE IN METERS
3. DESIGN SERVICE LIFE OF 100 YEARS.
4. FLANGES OF TOP AND BOTTOM CHORDS TO BE SUPPLIED WITH IMPROVED THROUGH THICKNESS PROPERTIES Z25 ACCORDING TO EN10164.

REFERENCE DRAWINGS

1	93M-0407-SEN-6OL11-END-10118-B PAGE 01:17
2	
3	
4	
5	
6	
7	
8	
9	
10	
11	

6TH OF OCTOBER CITY RAIL TRANSIT MONORAIL &
NEW CAPITAL CITY RAIL TRANSIT MONORAIL

The Authority
Hill International
Authority Consultant
Main Contractor
Designer

6 October Monorail
Engineering Unit
Valid For Construction

CONTRACTOR
CONSULTANT
ENGINEERING HOUSE FOR CONSULTANCY

SCALE: AS SHOWN | SHOP DRAWING | DATE: 20.11.2024

REV	DATE	BY	DESCRIPTION	CHK	APD
A	20-11-24	E.SH	ISSUE FOR APPROVAL	A.SH	M.M

DRAWING TITLE:
6TH OF OCTOBER MONORAIL
SHOP DRAWING FOR BRIDGE 6OL11-37
STEEL TRUSS (II).
DETAIL-6.01

Project Code	Rubric	Initiator	Lot	Ref	Number	Revision
93M	0407	AAC	6OL11	DWG	90184	A

REVIEWED WITH COMMENT
MONORAILS PROJECT

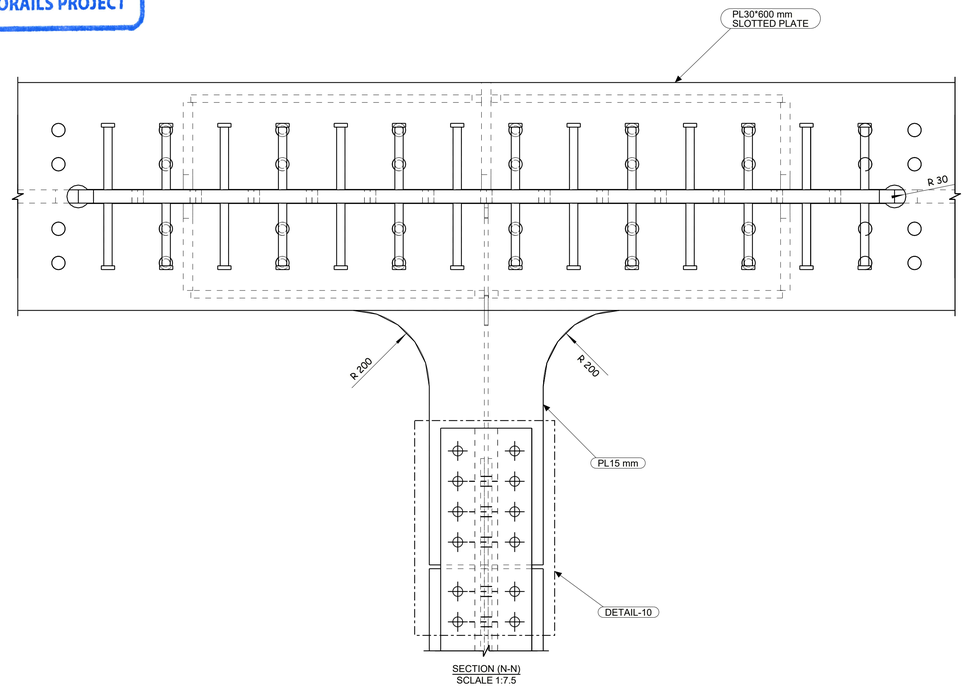

SECTION (N-N)
SCLALE 1:7.5

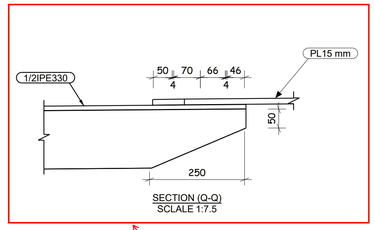

SECTION (Q-Q)
SCLALE 1:7.5

Bolts are missing from this section please clarify.

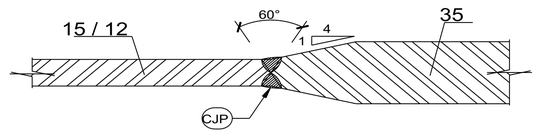

DETAIL WELD WEB TRANSITION
PL15 / 12mm TO PL35mm
(FOR CHORDS AND BRACE MEMBERS)

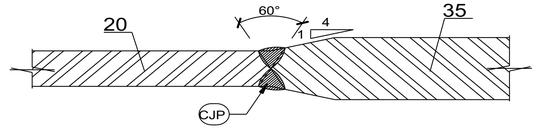

DETAIL WELD WEB TRANSITION
PL20mm TO PL35mm

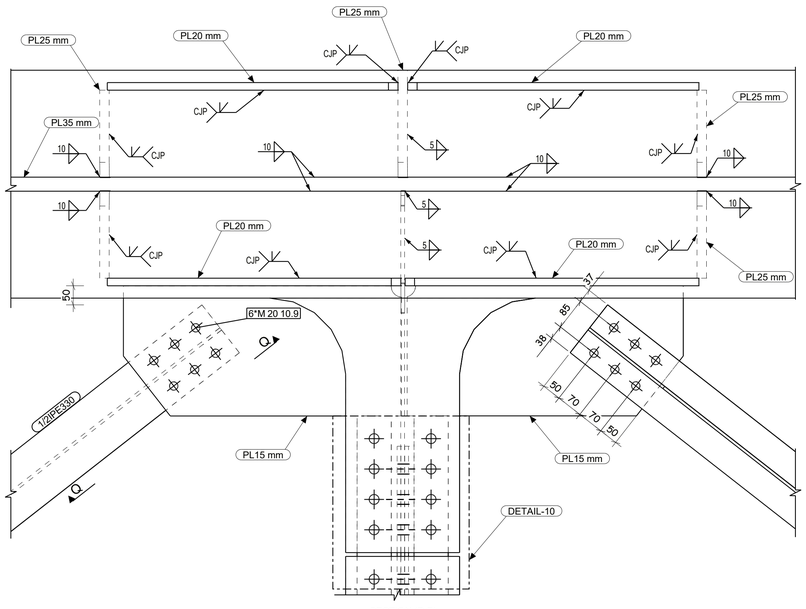

SECTION (P-P)
SCLALE 1:7.5

STRUCTURAL STEEL

- PLATES:
  - t ≤ 40mm S355J2N [EN 10025 : 2018]
  - t > 40mm S355K2N [EN 10025 : 2018]
- SHAPES (1/2 IPE 330)
  - S355J0N [EN 10025:2018]

SHEAR CONNECTOR

STUD ⊥22 h=175mm
S235J2G3+C450
ST37-3K
DIN17100

FILLET WELDS

- UNLESS NOTED OTHERWISE, ALL FILLET WELDS SHALL BE CONTINUOUS.
- FILLET WELDS SHALL BE MADE FROM BOTH SIDES (SYMMETRICAL BEADS).
- EFFECTIVE THROAT THICKNESSES ARE DEFINED (THEY SHOULD BE MULTIPLIED BY 1.41 TO GET THE LEG LENGTHS).

GROOVE WELDS

- ALL GROOVE WELDS SHALL BE MADE COMPLETE JOINT PENETRATION (CJP). BUTT JOINTS SHALL BE MADE WITH RUN-OFF PLATES. RUN-OFF PLATES SHALL BE REMOVED AFTER WELDING, GROUNDING THE EDGE IN THE DIRECTION OF STRESSES.
- STEEL TO BE PAINTED IN ACCORDANCE WITH PROJECT SPECIFICATIONS. (CORROSIVITY CATEGORY C4 DURABILITY VERY HIGH)
- QUALITY CONTROL IN ACCORDANCE WITH PROJECT SPECIFICATIONS. (EXECUTION LEVEL EXC3 ACCORDING TO EN1090-2:2019)

SYMBOL	DESCRIPTION
e	FILLET WELD OF EFFECTIVE THROAT THICKNESS (e)mm.
e	FILLET WELD OF EFFECTIVE THROAT THICKNESS (e)mm, BOTH SIDES.
PP	PARTIAL PENETRATION WELD.
CJP	COMPLETE JOINT PENETRATION.
	ALL AROUND WELD.
	FIELD WELD.

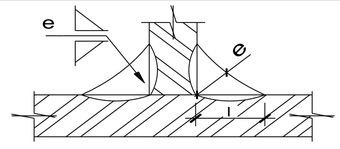

e=EFFECTIVE THROAT THICKNESS
l=LEG

6 October Monorail
Engineering Unit
Valid For Construction

GENERAL NOTES:

1. ALL DIMENSIONS ARE IN MILLIMETERS UNLESS OTHERWISE SPECIFIED.
2. LEVELS ARE IN METERS
3. DESIGN SERVICE LIFE OF 100 YEARS.
4. FLANGES OF TOP AND BOTTOM CHORDS TO BE SUPPLIED WITH IMPROVED THROUGH THICKNESS PROPERTIES Z25 ACCORDING TO EN10164.

REFERENCE DRAWINGS

1	93M-0407-SEN-6OL11-END-10118-B PAGE 01:17
2	
3	
4	
5	
6	
7	
8	
9	
10	
11	

6TH OF OCTOBER CITY RAIL TRANSIT MONORAIL &
NEW CAPITAL CITY RAIL TRANSIT MONORAIL

The Authority — Authority Consultant
Hill International
Main Contractor
Designer

CONTRACTOR
CONSULTANT:
ENGINEERING HOUSE FOR CONSULTANCY

SCALE: AS SHOWN | SHOPDRAWING | DATE: 30-11-2024

DRAWING TITLE:
6TH OF OCTOBER MONORAIL
SHOP DRAWING FOR BRIDGE 6OL11-37
STEEL TRUSS (II).
DETAIL-6.02

REV	DATE	BY	DESCRIPTION	CHK	APD
A	20-11-24	E.SH	ISSUE FOR APPROVAL	A.SH	M.M

Project Code	Rubric	Initiator	Lot	Ref	Number	Revision
9 3 M	0 4 0 7	A A C	6 0 L 1 1	D W G	90185	A

Tekla structures

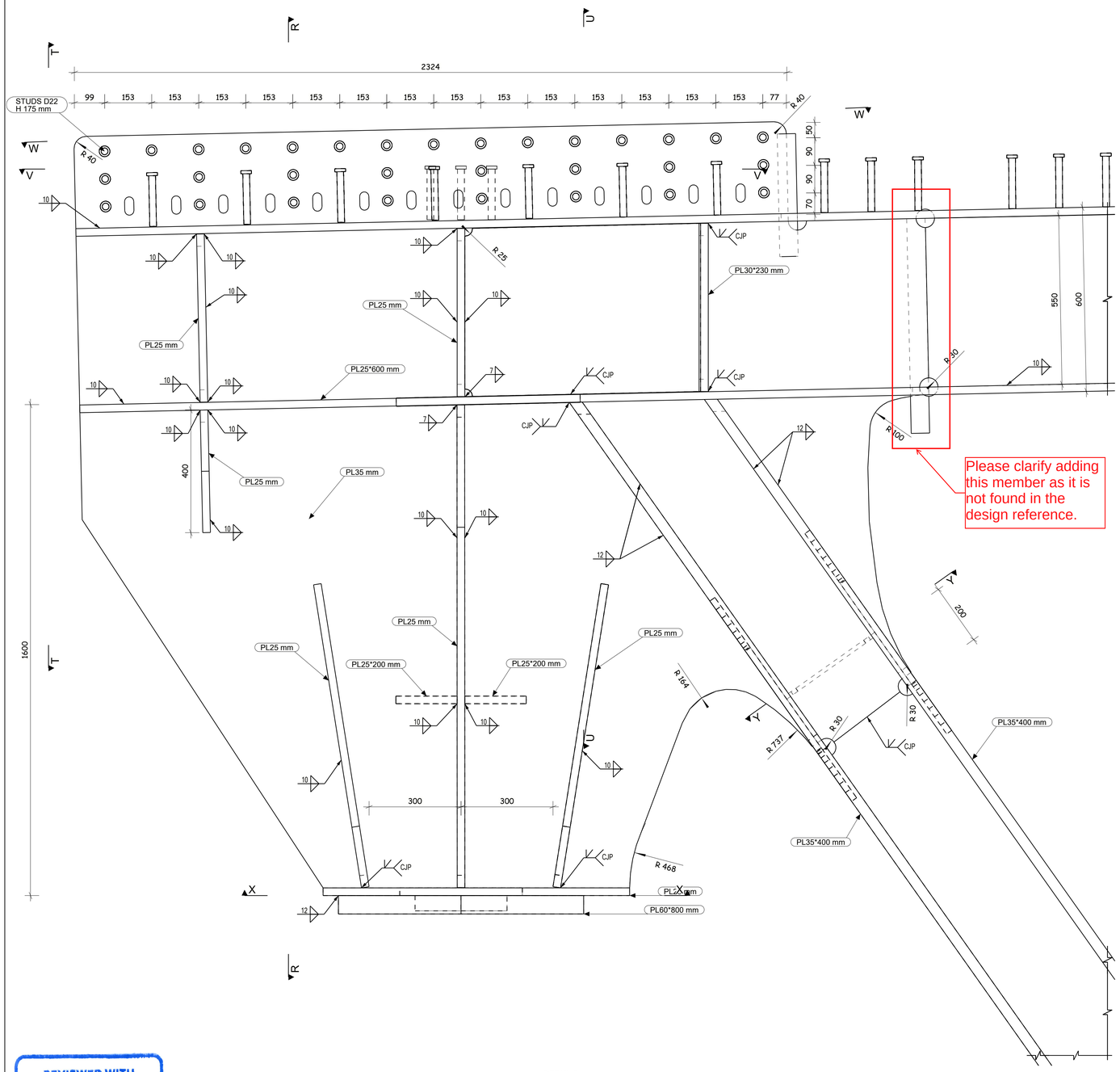

Please clarify adding this member as it is not found in the design reference.

DETAIL-7
SCALE 1:7.5

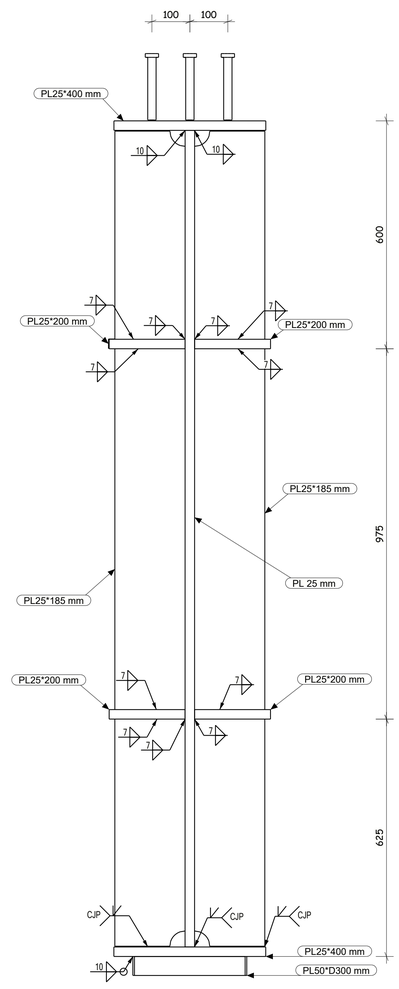

SECTION (S-S)
SCALE 1:7.5

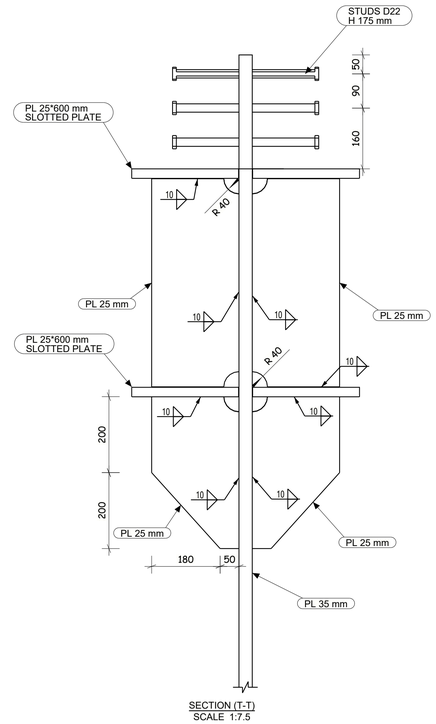

SECTION (T-T)
SCALE 1:7.5

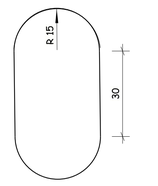

HOLES FOR REINFORCEMENT CROSSING
1:2

REVIEWED WITH COMMENT
MONORAILS PROJECT

6 October Monorail
Engineering Unit
Valid For Construction

GENERAL NOTES:

1. ALL DIMENSIONS ARE IN MILLIMETERS UNLESS OTHERWISE SPECIFIED.
2. LEVELS ARE IN METERS
3. DESIGN SERVICE LIFE OF 100 YEARS.
4. FLANGES OF TOP AND BOTTOM CHORDS TO BE SUPPLIED WITH IMPROVED THROUGH THICKNESS PROPERTIES Z25 ACCORDING TO EN10164.

REFERENCE DRAWINGS

1	93M-0407-SEN-6OL11-END-10118-B PAGE 01:17
2	
3	
4	
5	
6	
7	
8	
9	
10	
11	

6TH OF OCTOBER CITY RAIL TRANSIT MONORAIL &
NEW CAPITAL CITY RAIL TRANSIT MONORAIL

The Authority — Authority Consultant
Main Contractor
Designer

CONTRACTOR
CONSULTANT:
ENGINEERING HOUSE FOR CONSULTANCY

SCALE: AS SHOWN
SHOPDRAWING
DATE: 20-11-2024

REV	DATE	BY	DESCRIPTION	CHK	APD
A	20-11-24	E.SH	ISSUE FOR APPROVAL	A.SH	M.M

DRAWING TITLE:
6TH OF OCTOBER MONORAIL
SHOP DRAWING FOR BRIDGE 6OL11-37
STEEL TRUSS (II).
DETAIL-7.01

Project Code	Rubric	Initiator	Lot	Ref	Number	Revision
93M	0407	AAC	60L11	DWG	90186	A

Tekla structures

REVIEWED WITH COMMENT
MONORAILS PROJECT

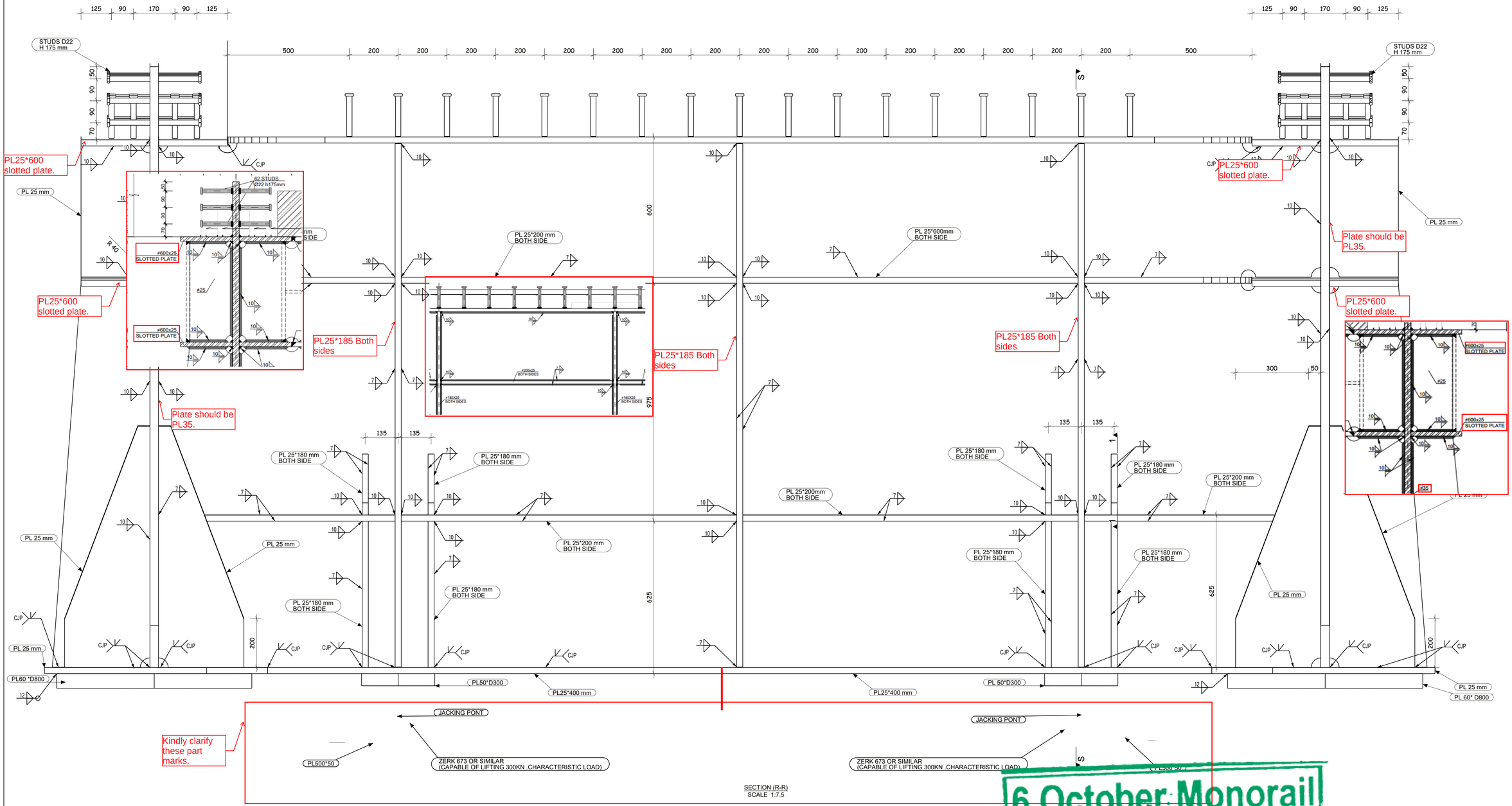

SECTION (R-R)
SCALE 1:7.5

GENERAL NOTES:

1. ALL DIMENSIONS ARE IN MILLIMETERS UNLESS OTHERWISE SPECIFIED.
2. LEVELS ARE IN METERS
3. DESIGN SERVICE LIFE OF 100 YEARS.
4. FLANGES OF TOP AND BOTTOM CHORDS TO BE SUPPLIED WITH IMPROVED THROUGH THICKNESS PROPERTIES Z25 ACCORDING TO EN10164.

REFERENCE DRAWINGS

1	93M-0407-SEN-6OL11-END-10118-B PAGE 01:17
2	
3	
4	
5	
6	
7	
8	
9	
10	
11	

6TH OF OCTOBER CITY RAIL TRANSIT MONORAIL &
NEW CAPITAL CITY RAIL TRANSIT MONORAIL

The Authority — Hill International Authority Consultant
Main Contractor
Designer

CONTRACTOR
CONSULTANT:
ENGINEERING HOUSE FOR CONSULTANCY

SCALE AS SHOWN | SHOP DRAWING | DATE 10-11-2024

REV	DATE	BY	DESCRIPTION	CHK	APD
A	20-11-24	E.SH	ISSUE FOR APPROVAL	A.SH	M.M

6 October Monorail
Engineering Unit
Valid For Construction

DRAWING TITLE:
6TH OF OCTOBER MONORAIL
SHOP DRAWING FOR BRIDGE 6OL11-37
STEEL TRUSS (II).
DETAIL-7.02

Project Code	Rubric	Initiator	Lot	Ref	Number	Revision
9 3 M	0 4 0 7	A A C	6 0 L 1 1	D W G	90187	A

Tekla structures

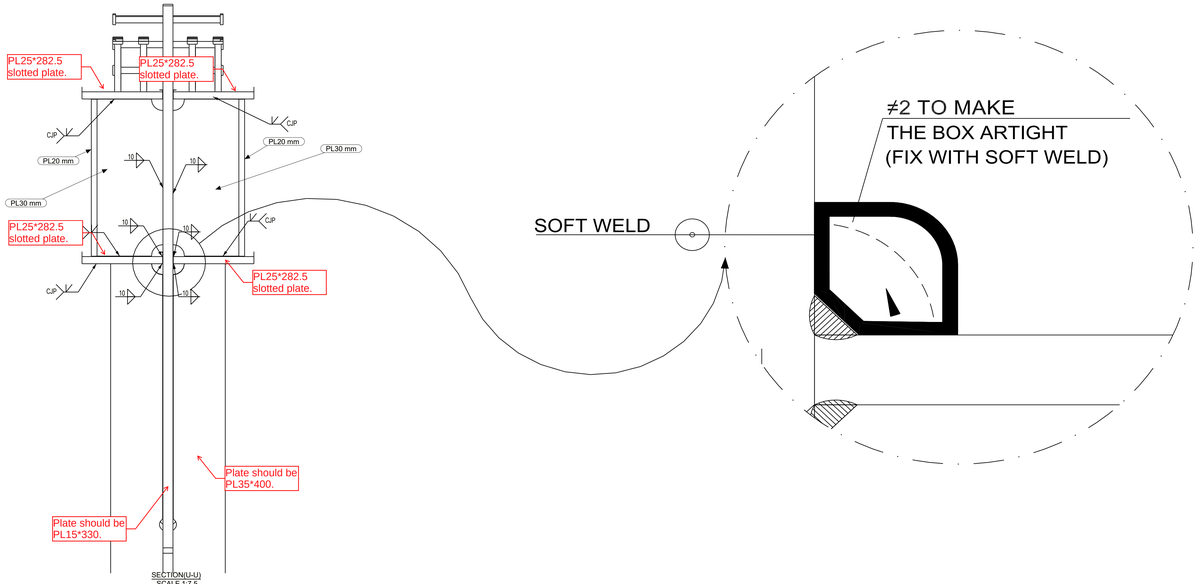

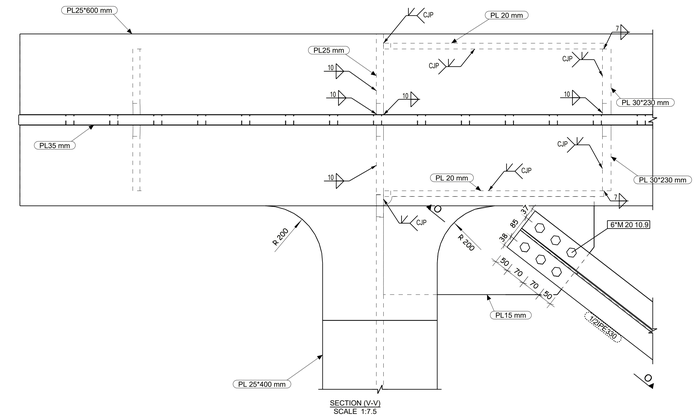

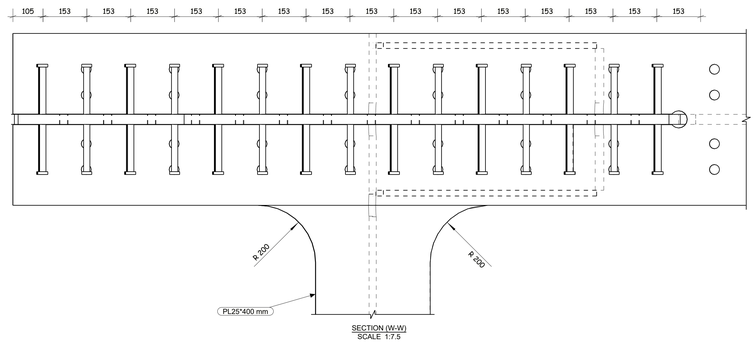

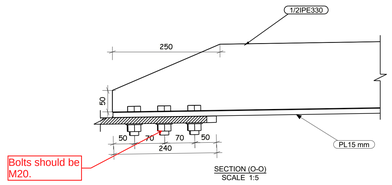

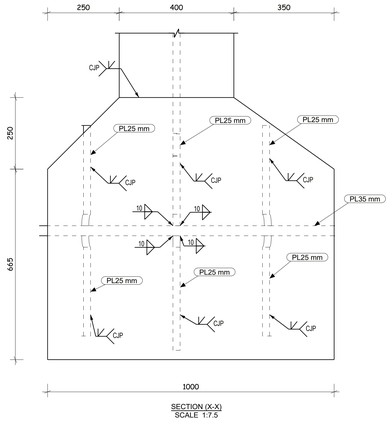

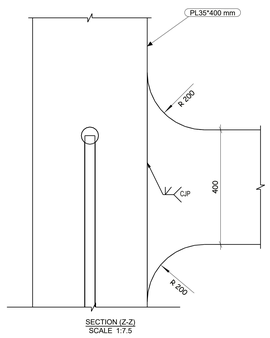

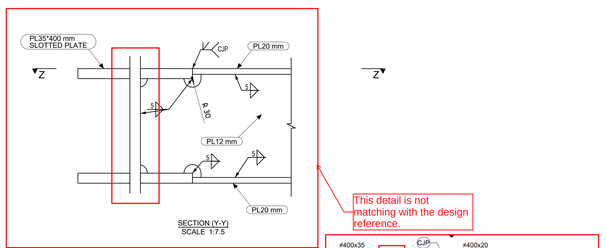

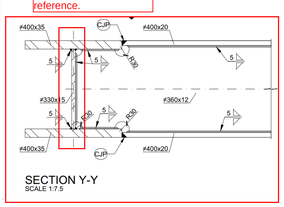

STRUCTURAL STEEL
- PLATES: t ≤ 40mm S355J2N [EN 10025 : 2018] t > 40mm S355K2N [EN 10025 : 2018] - SHAPES (1/2 IPE 330) S355J0N [EN 10025:2018]

SHEAR CONNECTOR
STUD ⅞"22 h=175mm S235J2G3+C450 ST37-3K DIN17100

FILLET WELDS
- UNLESS NOTED OTHERWISE, ALL FILLET WELDS SHALL BE CONTINUOUS. - FILLET WELDS SHALL BE MADE FROM BOTH SIDES (SYMMETRICAL BEADS). - EFFECTIVE THROAT THICKNESSES ARE DEFINED (THEY SHOULD BE MULTIPLIED BY 1.41 TO GET THE LEG LENGTHS).
GROOVE WELDS
- ALL GROOVE WELDS SHALL BE MADE COMPLETE JOINT PENETRATION (CJP). BUTT JOINTS SHALL BE MADE WITH RUN-OFF PLATES. RUN-OFF PLATES SHALL BE REMOVED AFTER WELDING, GROUNDING THE EDGE IN THE DIRECTION OF STRESSES.
- STEEL TO BE PAINTED IN ACCORDANCE WITH PROJECT SPECIFICATIONS. (CORROSIVITY CATEGORY C4 DURABILITY VERY HIGH) - QUALITY CONTROL IN ACCORDANCE WITH PROJECT SPECIFICATIONS. (EXECUTION LEVEL EXC3 ACCORDING TO EN1090-2:2019)

SYMBOL	DESCRIPTION
e	FILLET WELD OF EFFECTIVE THROAT THICKNESS (e)mm.
e	FILLET WELD OF EFFECTIVE THROAT THICKNESS (e)mm, BOTH SIDES.
PP	PARTIAL PENETRATION WELD.
CJP	COMPLETE JOINT PENETRATION.
	ALL AROUND WELD.
	FIELD WELD.

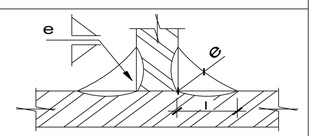

REVIEWED WITH COMMENT
MONORAILS PROJECT

GENERAL NOTES:

1. ALL DIMENSIONS ARE IN MILLIMETERS UNLESS OTHERWISE SPECIFIED.
2. LEVELS ARE IN METERS
3. DESIGN SERVICE LIFE OF 100 YEARS.
4. FLANGES OF TOP AND BOTTOM CHORDS TO BE SUPPLIED WITH IMPROVED THROUGH THICKNESS PROPERTIES Z25 ACCORDING TO EN10164.

REFERENCE DRAWINGS

1	93M-0407-SEN-6OL11-END-10118-B PAGE 01:17
2	
3	
4	
5	
6	
7	
8	
9	
10	
11	

6TH OF OCTOBER CITY RAIL TRANSIT MONORAIL &
NEW CAPITAL CITY RAIL TRANSIT MONORAIL

The Authority — Hill International Authority Consultant — ORASCOM CONSTRUCTION — BOMBARDIER — Main Contractor — SENER — SHAKER CONSULTANCY GROUP — Designer

6 October Monorail Engineering Unit
Valid For Construction

CONTRACTOR
CONSULTANT
ENGINEERING HOUSE FOR CONSULTANCY

SCALE: AS SHOWN | SHOP DRAWING | DATE: 20.11.2024

DRAWING TITLE:
6TH OF OCTOBER MONORAIL
SHOP DRAWING FOR BRIDGE 6OL11-37
STEEL TRUSS (II).
DETAIL-7.03

REV	DATE	BY	DESCRIPTION	CHK	APD
A	20-11-24	E.SH	ISSUE FOR APPROVAL	A.SH	M.M

Project Code	Rubric	Initiator	Lot	Ref	Number	Revision
9 3 M	0 4 0 7	A A C	6 0 L 1 1	D W G	90188	A

Tekla structures

-Approval is subjected to the approval of coordination package between multi-discipline.

REVIEWED WITH COMMENT MONORAILS PROJECT

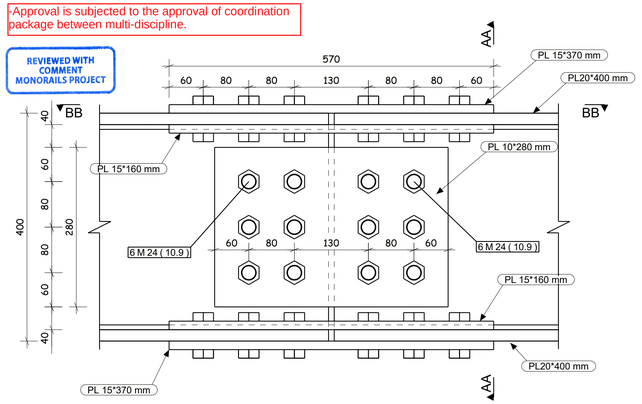

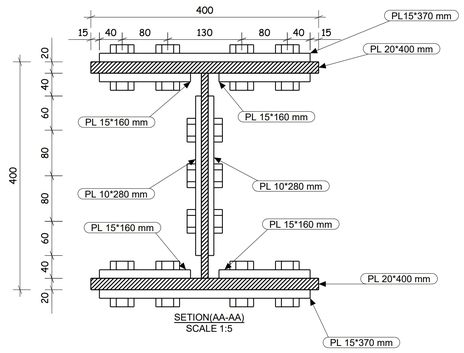

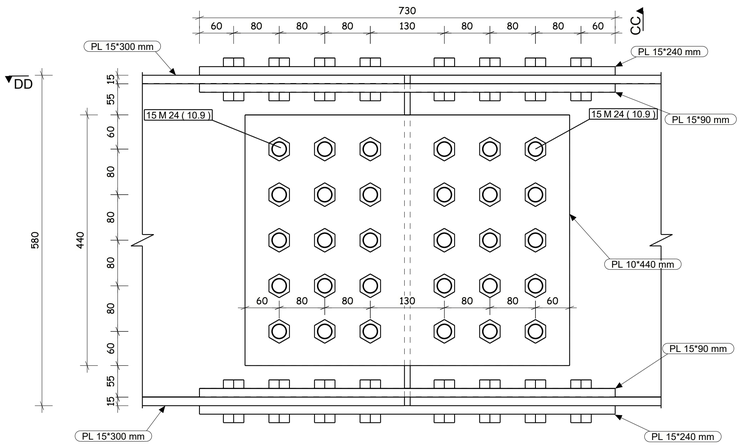

DETAIL-10
(TRANSVERSAL BEAM
SCALE 1:5

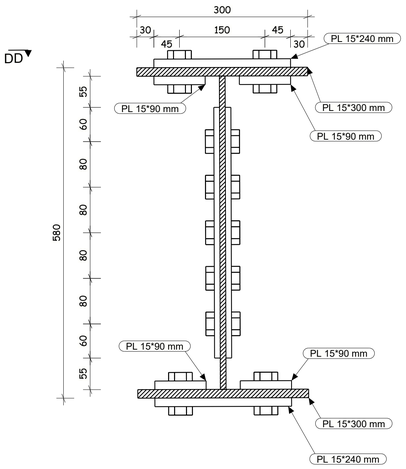

SECTION (CC-CC)
SCALE 1:5

DETAIL-8
(BRACE MEMBER)
SCALE 1:5

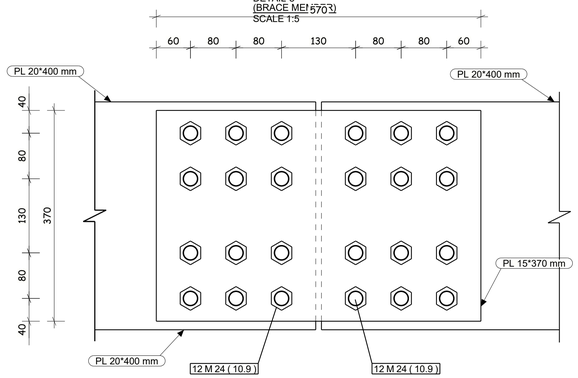

SECTION(BB-BB)
SCALE 1:5

EE

PRELOAD LOADS

M20x2.5 [10.9] : 172kN
M24x3.0 [10.9] : 247kN
M30x3.5 [10.9] : 393kN

TORQUE METHOD ACCORDING TO EN 1090-2 SHALL BE USED AS TIGHTENING PROCEDURE .

FAYING SURFACES TO BE TREATED TO ACHIEVE A FRICTION COEFFICIENT OF 0,4 (μ=0,4)

FASTENING ELEMENTS			
ELEMENT	BOLTS	NUTS	WASHERS
TYPE	M20X2.5 [10.9] M24X3.0 [10.9] M30X3.5 [10.9]	M20X2.5 [10] M24X3.0 [10] M30X3.5 [10]	M20 C45E+T M24 C45E+T M30 C45E+T
CODE	EN14399-1/EN14399-4-HV / EN ISO 898-1	EN14399-1/EN14399-4-HV / EN ISO 898-2	EN14399-1/EN14399-6-HV / EN10083-1

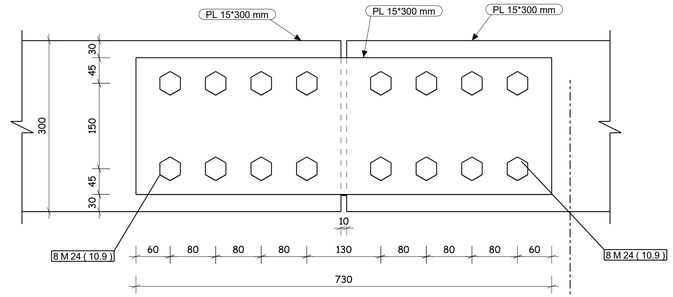

SECTION(DD-DD)
SCALE 1:5

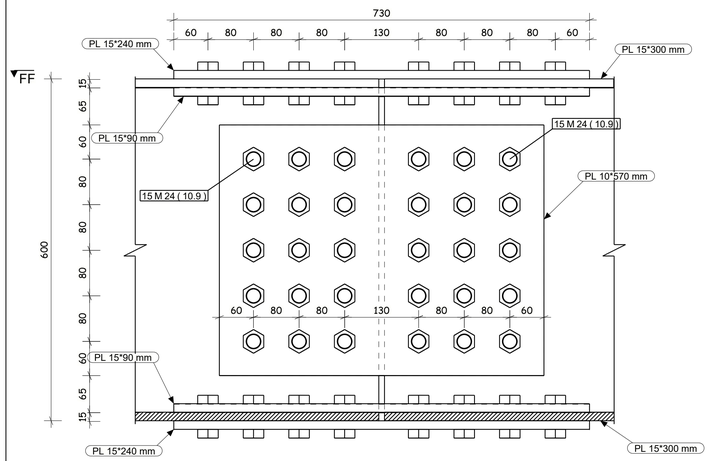

DETAIL-9
(TRANSVERSAL BEAM)
SCALE 1:5

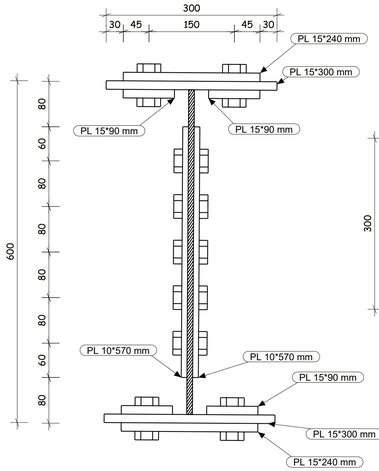

SECTION (EE-EE)
SCALE 1:5

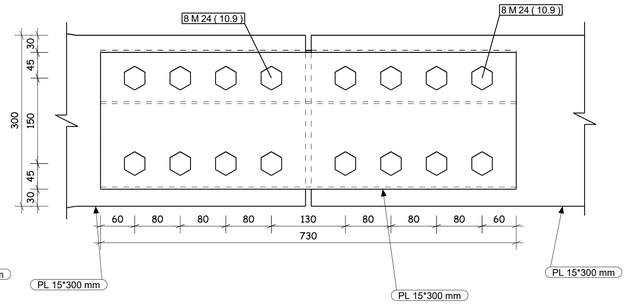

SECTION(FF-FF)
SCALE 1:5

STRUCTURAL STEEL

- - PLATES:
  t t 40mm S355J2N [EN 10025 : 2018]
  t > 40mm S355K2N [EN 10025 : 2018]
- - SHAPES (1/2 IPE 330)
  S355J0N [EN 10025:2018]

SHEAR CONNECTOR

STUD ⌀22 h=175mm
S235J2G3+C450
ST37-3K
DIN17100

FILLET WELDS

- UNLESS NOTED OTHERWISE, ALL FILLET WELDS SHALL BE CONTINUOUS.
- FILLET WELDS SHALL BE MADE FROM BOTH SIDES (SYMMETRICAL BEADS).
- EFFECTIVE THROAT THICKNESSES ARE DEFINED (THEY SHOULD BE MULTIPLIED BY 1.41 TO GET THE LEG LENGTHS).

GROOVE WELDS

- ALL GROOVE WELDS SHALL BE MADE COMPLETE JOINT PENETRATION (CJP). BUTT JOINTS SHALL BE MADE WITH RUN-OFF PLATES. RUN-OFF PLATES SHALL BE REMOVED AFTER WELDING, GROUNDING THE EDGE IN THE DIRECTION OF STRESSES.

- - STEEL TO BE PAINTED IN ACCORDANCE WITH PROJECT SPECIFICATIONS. (CORROSIVITY CATEGORY C4 DURABILITY VERY HIGH)
- - QUALITY CONTROL IN ACCORDANCE WITH PROJECT SPECIFICATIONS. (EXECUTION LEVEL EXC3 ACCORDING TO EN1090-2:2019)

SYMBOL	DESCRIPTION
e	FILLET WELD OF EFFECTIVE THROAT THICKNESS (e)mm.
e	FILLET WELD OF EFFECTIVE THROAT THICKNESS (e)mm, BOTH SIDES.
PJP	PARTIAL PENETRATION WELD.
CJP	COMPLETE JOINT PENETRATION.
	FILLET RUN WELD.
	FIELD WELD.

e=EFFECTIVE THROAT THICKNESS
l=LEG

6 October Monorail
Engineering Unit
Valid For Construction

GENERAL NOTES:

1. ALL DIMENSIONS ARE IN MILLIMETERS UNLESS OTHERWISE SPECIFIED.
2. LEVELS ARE IN METERS
3. DESIGN SERVICE LIFE OF 100 YEARS.
4. FLANGES OF TOP AND BOTTOM CHORDS TO BE SUPPLIED WITH IMPROVED THROUGH THICKNESS PROPERTIES Z25 ACCORDING TO EN10164.

REFERENCE DRAWINGS	
1	93M-0407-SEN-6OL11-END-10118-B PAGE 01:17
2	
3	
4	
5	
6	
7	
8	
9	
10	
11	

6TH OF OCTOBER CITY RAIL TRANSIT MONORAIL &
NEW CAPITAL CITY RAIL TRANSIT MONORAIL

The Authority — Hill International Authority Consultant — Main Contractor — Designer

CONTRACTOR
CONSULTANT:
ENGINEERING HOUSE FOR CONSULTANCY

SCALE: AS SHOWN
SHOPDRAWING
DATE: 20-11-2024

REV	DATE	BY	DESCRIPTION	CHK	APD
A	20-11-24	E.SH	ISSUE FOR APPROVAL	A.SH	M.M

DRAWING TITLE:
6TH OF OCTOBER MONORAIL
SHOP DRAWING FOR BRIDGE 6OL11-37
STEEL TRUSS (II).
SPLICE CONNECTION.01

Project Code	Rubric	Initiator	Lot	Ref	Number	Revision
9 3	M 0 4 0 7	A A C	6 0 L 1 1	D W G	90189	A

Tekla structures

+3900

SECTION

-Approval is subjected to the approval of coordination package between multi-discipline.

REVIEWED WITH COMMENT
MONORAILS PROJECT

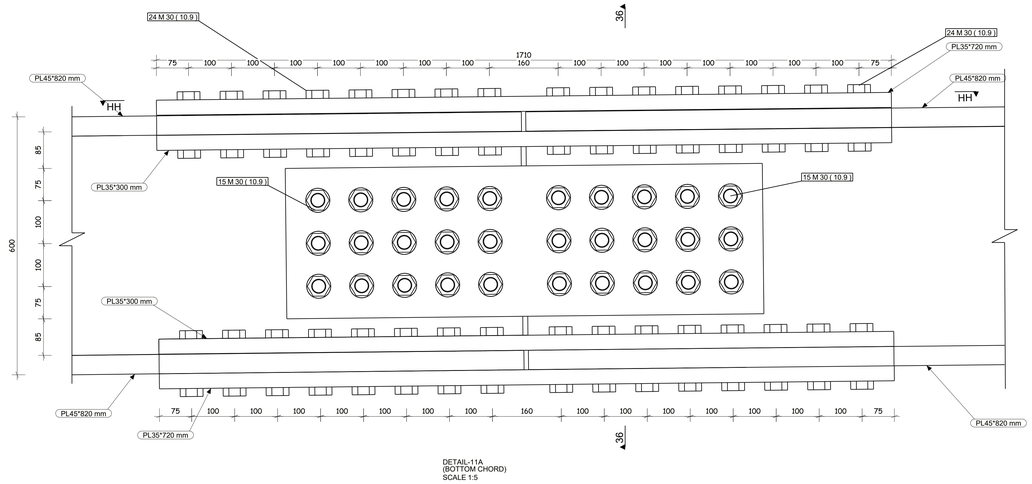

DETAIL-11A
(BOTTOM CHORD)
SCALE 1:5

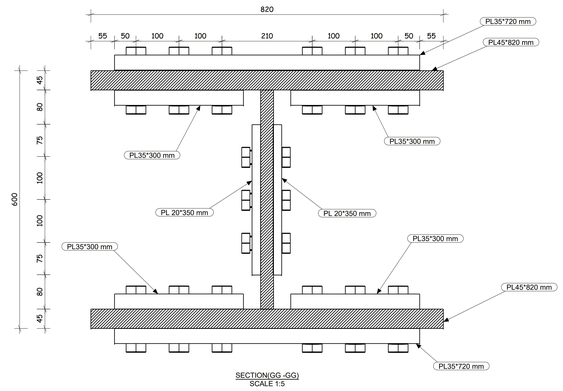

SECTION(GG -GG)
SCALE 1:5

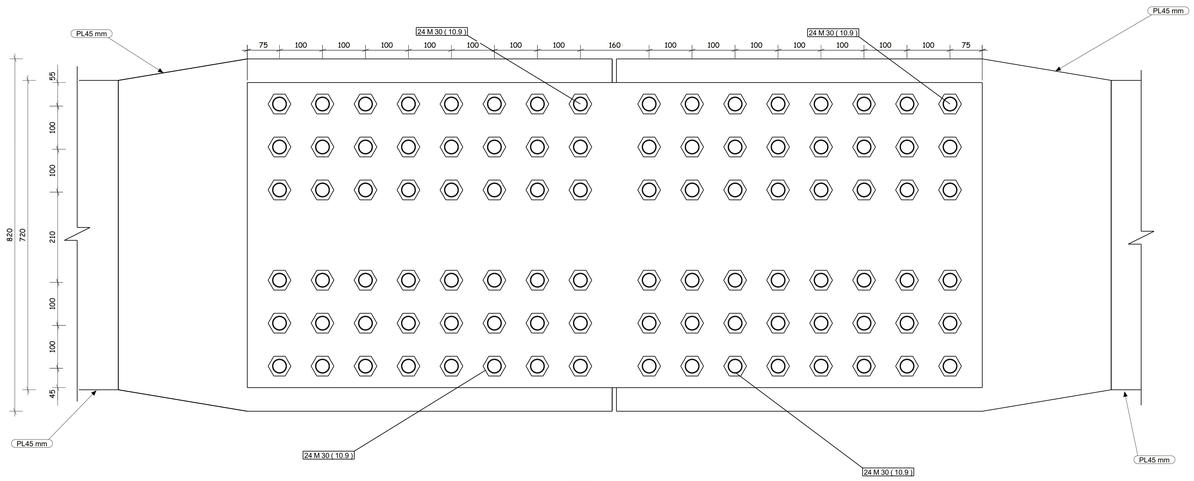

SECTION(HH -HH)
SCALE 1:5

STRUCTURAL STEEL
- - PLATES: t ≤ 40mm S355J2N [EN 10025 : 2018] t > 40mm S355K2N [EN 10025 : 2018] - - SHAPES (1/2 IPE 330) S355J0N [EN 10025:2018]

SHEAR CONNECTOR
STUD ⌀22 h=175mm S235J2G3+C450 ST37-3K DIN17100

FILLET WELDS
- UNLESS NOTED OTHERWISE, ALL FILLET WELDS SHALL BE CONTINUOUS. - FILLET WELDS SHALL BE MADE FROM BOTH SIDES (SYMMETRICAL BEADS). - EFFECTIVE THROAT THICKNESSES ARE DEFINED (THEY SHOULD BE MULTIPLIED BY 1.41 TO GET THE LEG LENGTHS).
GROOVE WELDS
- ALL GROOVE WELDS SHALL BE MADE COMPLETE JOINT PENETRATION (CJP). BUTT JOINTS SHALL BE MADE WITH RUN-OFF PLATES. RUN-OFF PLATES SHALL BE REMOVED AFTER WELDING, GROUNDING THE EDGE IN THE DIRECTION OF STRESSES.
- - STEEL TO BE PAINTED IN ACCORDANCE WITH PROJECT SPECIFICATIONS. (CORROSIVITY CATEGORY C4 DURABILITY VERY HIGH) - - QUALITY CONTROL IN ACCORDANCE WITH PROJECT SPECIFICATIONS. (EXECUTION LEVEL EXC3 ACCORDING TO EN1090-2:2019)

SYMBOL	DESCRIPTION
e	FILLET WELD OF EFFECTIVE THROAT THICKNESS (e)mm.
e	FILLET WELD OF EFFECTIVE THROAT THICKNESS (e)mm, BOTH SIDES.
PP	PARTIAL PENETRATION WELD.
CJP	COMPLETE JOINT PENETRATION.
	ALL AROUND WELD.
	FIELD WELD.

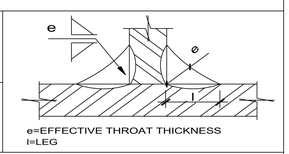

e=EFFECTIVE THROAT THICKNESS
l=LEG

PRELOAD LOADS
M20x2.5 [10.9] : 172kN M24x3.0 [10.9] : 247kN M30x3.5 [10.9] : 393kN TORQUE METHOD ACCORDING TO EN 1090-2 SHALL BE USED AS TIGHTENING PROCEDURE . FAYING SURFACES TO BE TREATED TO ACHIEVE A FRICTION COEFFICIENT OF 0,4 (μ=0,4)

FASTENING ELEMENTS			
ELEMENT	BOLTS	NUTS	WASHERS
TYPE	M20X2.5 [10.9] M24X3.0 [10.9] M30X3.5 [10.9]	M20X2.5 [10] M24X3.0 [10] M30X3.5 [10]	M20 C45E+T M24 C45E+T M30 C45E+T
CODE	EN14399-1/EN14399-4-HV / EN ISO 898-1	EN14399-1/EN14399-4-HV / EN ISO 898-2	EN14399-1/EN14399-6-HV / EN10083-1

GENERAL NOTES:

1. ALL DIMENSIONS ARE IN MILLIMETERS UNLESS OTHERWISE SPECIFIED.
2. LEVELS ARE IN METERS
3. DESIGN SERVICE LIFE OF 100 YEARS.
4. FLANGES OF TOP AND BOTTOM CHORDS TO BE SUPPLIED WITH IMPROVED THROUGH THICKNESS PROPERTIES Z25 ACCORDING TO EN10164.

REFERENCE DRAWINGS	
1	93M-0407-SEN-6OL11-END-10118-B PAGE 01:17
2	
3	
4	
5	
6	
7	
8	
9	
10	
11	

6TH OF OCTOBER CITY RAIL TRANSIT MONORAIL &
NEW CAPITAL CITY RAIL TRANSIT MONORAIL

The Authority
Hill International
Authority Consultant

ORASCOM CONSTRUCTION — BOMBARDIER
Main Contractor

SENER
SHAKER CONSULTANCY GROUP
Designer

6 October Monorail
Engineering Unit
Valid For Construction

CONTRACTOR
CONSULTANT
ENGINEERING HOUSE FOR CONSULTANCY

SCALE: AS SHOWN | SHOP DRAWING | DATE: 20.11.2024

REV	DATE	BY	DESCRIPTION	CHK	APD
A	20-11-24	E.SH	ISSUE FOR APPROVAL	A.SH	M.M

DRAWING TITLE:
6TH OF OCTOBER MONORAIL
SHOP DRAWING FOR BRIDGE 6OL11-37
STEEL TRUSS (II).
SPLICE CONNECTION.02

Project Code	Rubric	Initiator	Lot	Ref	Number	Revision
9 3 M	0 4 0 7	A A C	6 0 L 1 1	D W G	90190	A

Data structures

-Approval is subjected to the approval of coordination package between multi-discipline.

REVIEWED WITH COMMENT
MONORAILS PROJECT

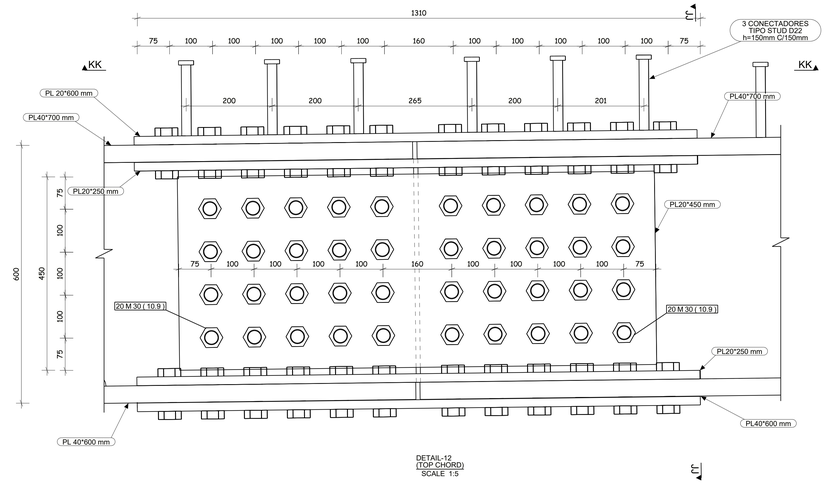

DETAIL-12
(TOP CHORD)
SCALE 1:5

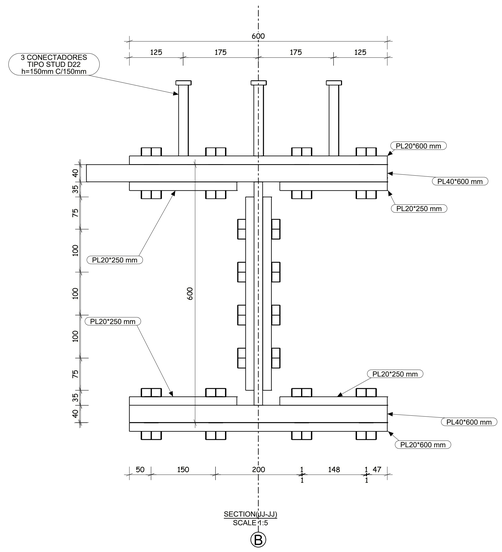

SECTION(JJ-JJ)
SCALE 1:5

STRUCTURAL STEEL
- - PLATES: t ≤ 40mm S355J2N [EN 10025 : 2018] t > 40mm S355K2N [EN 10025 : 2018] - - SHAPES (1/2 IPE 330) S355J0N [EN 10025:2018]

SHEAR CONNECTOR
STUD ⏀22 h=175mm S235J2G3+C450 ST37-3K DIN17100

FILLET WELDS
- UNLESS NOTED OTHERWISE, ALL FILLET WELDS SHALL BE CONTINUOUS. - FILLET WELDS SHALL BE MADE FROM BOTH SIDES (SYMMETRICAL BEADS). - EFFECTIVE THROAT THICKNESSES ARE DEFINED (THEY SHOULD BE MULTIPLIED BY 1.41 TO GET THE LEG LENGTHS).
GROOVE WELDS
- ALL GROOVE WELDS SHALL BE MADE COMPLETE JOINT PENETRATION (CJP). BUTT JOINTS SHALL BE MADE WITH RUN-OFF PLATES, RUN-OFF PLATES SHALL BE REMOVED AFTER WELDING, GROUNDING THE EDGE IN THE DIRECTION OF STRESSES.
- - STEEL TO BE PAINTED IN ACCORDANCE WITH PROJECT SPECIFICATIONS. (CORROSIVITY CATEGORY C4 DURABILITY VERY HIGH) - - QUALITY CONTROL IN ACCORDANCE WITH PROJECT SPECIFICATIONS. (EXECUTION LEVEL EXC3 ACCORDING TO EN1090-2:2019)

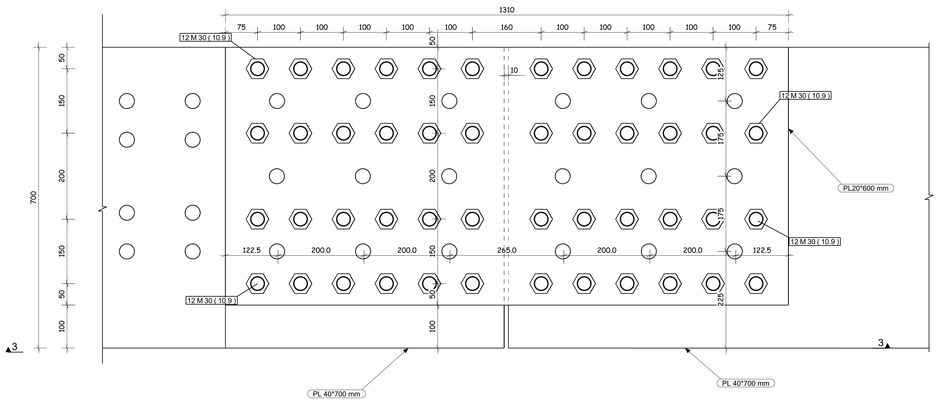

SECTION(KK -KK)
SCALE 1:5

SYMBOL	DESCRIPTION
e	FILLET WELD OF EFFECTIVE THROAT THICKNESS (e)mm.
e	FILLET WELD OF EFFECTIVE THROAT THICKNESS (e)mm, BOTH SIDES.
PP	PARTIAL PENETRATION WELD.
CJP	COMPLETE JOINT PENETRATION.
	ALL AROUND WELD.
	FIELD WELD.

e=EFFECTIVE THROAT THICKNESS
l=LEG

PRELOAD LOADS
M20x2.5 [10.9] : 172kN M24x3.0 [10.9] : 247kN M30x3.5 [10.9] : 393kN TORQUE METHOD ACCORDING TO EN 1090-2 SHALL BE USED AS TIGHTENING PROCEDURE . FAYING SURFACES TO BE TREATED TO ACHIEVE A FRICTION COEFFICIENT OF 0,4 (μ=0,4)

FASTENING ELEMENTS			
ELEMENT	BOLTS	NUTS	WASHERS
TYPE	M20X2.5 [10.9] M24X3.0 [10.9] M30X3.5 [10.9]	M20X2.5 [10] M24X3.0 [10] M30X3.5 [10]	M20 C45E+T M24 C45E+T M30 C45E+T
CODE	EN14399-1/EN14399-4-HV / EN ISO 898-1	EN14399-1/EN14399-4-HV / EN ISO 898-2	EN14399-1/EN14399-6-HV / EN10083-1

Clear this view

GENERAL NOTES:

1. ALL DIMENSIONS ARE IN MILLIMETERS UNLESS OTHERWISE SPECIFIED.
2. LEVELS ARE IN METERS
3. DESIGN SERVICE LIFE OF 100 YEARS.
4. FLANGES OF TOP AND BOTTOM CHORDS TO BE SUPPLIED WITH IMPROVED THROUGH THICKNESS PROPERTIES Z25 ACCORDING TO EN10164.

REFERENCE DRAWINGS	
1	93M-0407-SEN-6OL11-END-10118-B PAGE 01:17
2	
3	
4	
5	
6	
7	
8	
9	
10	
11	

6TH OF OCTOBER CITY RAIL TRANSIT MONORAIL &
NEW CAPITAL CITY RAIL TRANSIT MONORAIL

The Authority
Hill International
Authority Consultant

Main Contractor

Designer

CONTRACTOR
CONSULTANT

ENGINEERING HOUSE FOR CONSULTANCY

6 October Monorail
Engineering Unit
Valid For Construction

SCALE: AS SHOWN | SHOP DRAWING | DATE 20.11.2024

REV	DATE	BY	DESCRIPTION	CHK	APD
A	20-11-24	E.SH	ISSUE FOR APPROVAL	A.SH	M.M

DRAWING TITLE:
6TH OF OCTOBER MONORAIL
SHOP DRAWING FOR BRIDGE 6OL11-37
STEEL TRUSS (II).
SPLICE CONNECTION.03

Project Code	Rubric	Initiator	Lot	Ref	Number	Revision
9 3 M	0 4 0 7	A A C	6 0 L 1 1	D W G	90191	A

Q - Q

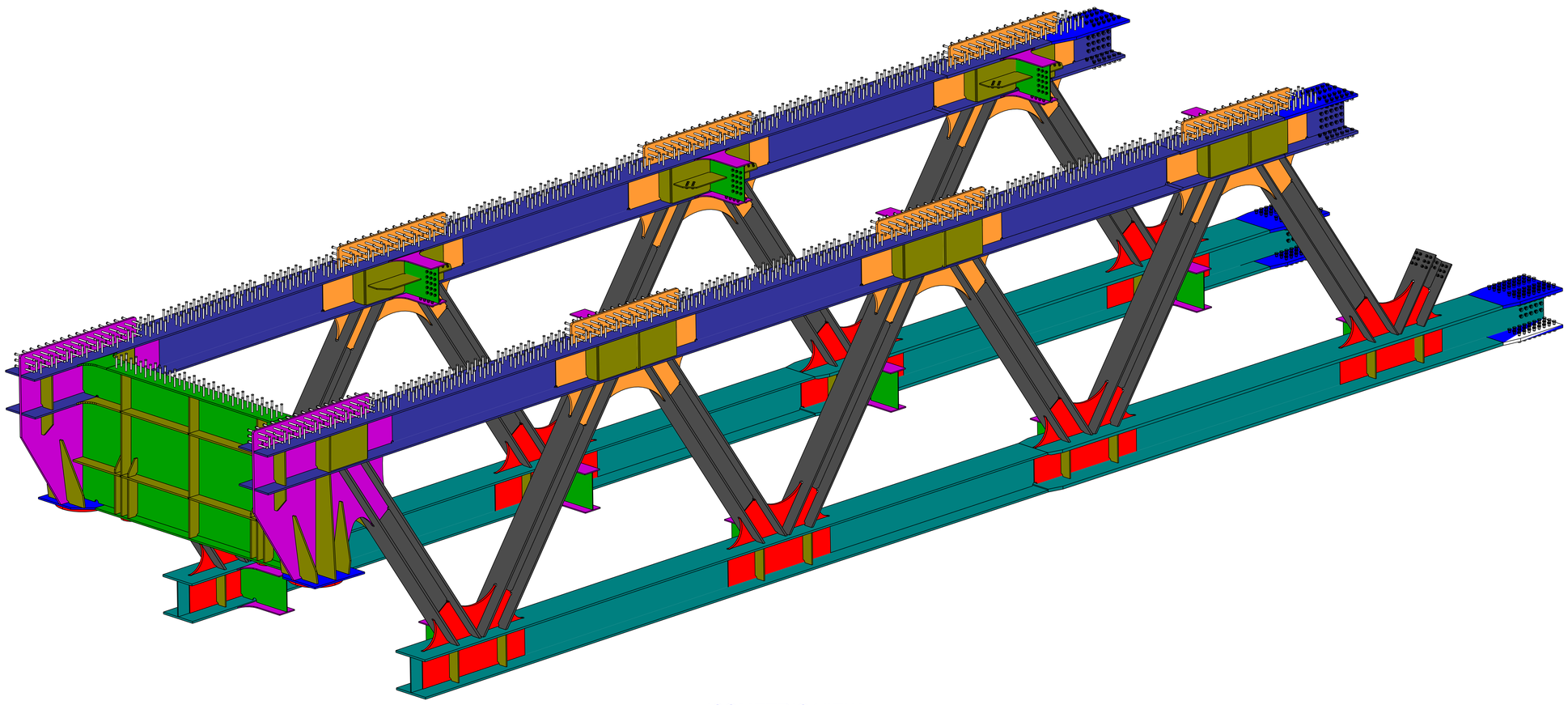

ISOMETRIC VIEW

ERECTION MARK : TR1 QTY : 1 NOS

POS NO.	QTY PER ASS'Y	SECTION	LENGTH	UNIT WEIGHT (Kg)	TOTAL QTY	TOTAL WEIGHT	GRADE
WP27	1	PL15*330	2063	80	1	80.0	S355JN
1001	2	PL25*400.0	800	35	2	70.0	S355JN
1002	4	PL25*400.0	688	29	4	116.0	S355JN
FL1	2	PL20*400.0	3000	188	2	376.0	S355JN
FL2	4	PL20*700.0	800	47	4	188.0	S355JN
FP1	2	PL45*820.0	1149	327	2	654.0	S355JN
FP1	1	PL45*820.0	1149	328	1	328.0	S355JN
FP2	1	PL45*820.0	1149	327	1	327.0	S355JN
FP3	2	PL30*600.0	12505	1731	2	3462.0	S355JN
FP4	2	PL30*600.0	12501	1766	2	3532.0	S355JN
FP5	2	PL25*600.0	18326	2108	2	4216.0	S355JN
FP6	1	PL25*600.0	18321	2096	1	2096.0	S355JN
FP7	1	PL40*700.0	1467	311	1	311.0	S355JN
FP8	1	PL40*600.0	1467	268	1	268.0	S355JN
FP9	2	PL20*400.0	1257	73	2	146.0	S355JN
FP10	2	PL20*400.0	991	58	2	116.0	S355JN
FP11	2	PL30*400.0	4013	362	2	724.0	S355JN
FP12	2	PL30*400.0	4013	362	2	724.0	S355JN
FP13	1	PL35*400.0	4063	427	1	427.0	S355JN
FP13	1	PL35*400.0	4063	428	1	428.0	S355JN
FP14	1	PL35*400.0	4063	427	1	427.0	S355JN
FP15	2	PL30*400.0	4018	363	2	726.0	S355JN
FP16	2	PL30*400.0	4017	362	2	724.0	S355JN
FP17	2	PL30*400.0	4053	366	2	732.0	S355JN
FP18	1	PL30*400.0	4053	366	1	366.0	S355JN
FP19	1	PL20*400.0	4019	242	1	242.0	S355JN
FP20	1	PL20*400.0	4019	242	1	242.0	S355JN
FP21	2	PL30*400.0	4048	365	2	730.0	S355JN
FP22	2	PL30*400.0	4048	365	2	730.0	S355JN
FP26	1	PL45*720.0	9079	2248	1	2248.0	S355KN
FP27	2	PL45*720.0	9077	2301	2	4602.0	S355KN
FP34	1	PL40*700.0	1467	311	1	311.0	S355JN
FP37	1	PL30*400.0	4053	366	1	366.0	S355JN
FP40	1	PL45*720.0	9079	2248	1	2248.0	S355KN
FP52	2	PL35*400.0	4010	417	2	834.0	S355JN
FP53	1	PL20*400.0	4019	242	1	242.0	S355JN
FP59	1	PL25*600.0	18321	2096	1	2096.0	S355JN
FP60	1	PL40*600.0	1467	268	1	268.0	S355JN
FP61	1	PL35*400.0	4009	416	1	416.0	S355JN
FP62	1	PL35*400.0	4063	427	1	427.0	S355JN
FP63	1	PL20*400.0	4019	242	1	242.0	S355JN
FP78	1	PL35*400.0	4009	416	1	416.0	S355JN
GP8	2	PL35*2487.0	2771	1520	2	3040.0	S355JN
IS1	16	PL20*180.0	508	14	16	224.0	S355JN
IS2	16	PL20*180.0	538	15	15	240.0	S355JN
IS3	8	PL25*230.0	518	23	8	184.0	S355JN
IS4	2	PL25*283.0	518	28	2	56.0	S355JN
IS5	20	PL24*230.0	548	24	20	480.0	S355JN
IS6	6	PL25*283.0	548	30	6	180.0	S355JN
IS7	4	PL30*230.0	548	29	4	116.0	S355JN
IS8	4	PL25*230.0	230	14	4	56.0	S355JN
IS9	8	PL25*180.0	250	6	8	48.0	S355JN
IS10	6	PL25*185.0	2146	77	6	462.0	S355JN
IS11	8	PL25*180.0	600	21	8	168.0	S355JN
S1	1060	ROD22	175	1	1060	1060.0	S235J2G3
S2	231	ROD22	175	1	231	231.0	S235J2G3
W1	2	PL35*1212.0	2050	543	2	1086.0	S355JN
W3	1	PL35*1195.0	2050	538	1	538.0	S355JN
W4	1	PL35*1192.0	2051	536	1	536.0	S355JN
W10	2	PL20*518.0	769	62	2	124.0	S355JN
W12	2	PL20*518.0	772	63	2	126.0	S355JN
W13	2	PL20*518.0	776	63	2	126.0	S355JN
W14	2	PL20*518.0	764	62	2	124.0	S355JN
W15	2	PL20*548.0	781	67	2	134.0	S355JN
W16	6	PL20*548.0	768	66	6	396.0	S355JN
W17	4	PL20*548.0	766	66	4	264.0	S355JN
W18	2	PL20*548.0	775	67	2	134.0	S355JN
W19	2	PL20*548.0	773	66	2	132.0	S355JN
W20	1	PL35*1206.0	2051	542	1	542.0	S355JN
W26	1	PL35*1195.0	2050	538	1	538.0	S355JN
W27	1	PL35*1192.0	2051	536	1	536.0	S355JN
W29	1	PL35*1206.0	2051	543	1	543.0	S355JN
W30	2	PL15*343.0	732	28	2	56.0	S355JN
W31	4	PL15*343.0	727	28	4	112.0	S355JN
W33	2	PL15*343.0	732	28	2	56.0	S355JN
W35	1	PL15*343.0	727	28	1	28.0	S355JN
W36	1	PL15*343.0	727	28	1	28.0	S355JN
W38	4	PL20*548.0	781	66	4	264.0	S355JN
W39	1	PL25*400.0	3870	304	1	304.0	S355JN
W40	8	PL25*350.0	1000	45	8	360.0	S355JN
W41	2	PL25*915.0	1000	165	2	330.0	S355JN
W42	2	PL50*800.0	800	235	2	470.0	S355KN
W43	8	PL25*200.0	1375	54	8	432.0	S355JN
W44	4	PL25*200.0	970	38	4	152.0	S355JN
W45	1	PL25*400.0	3400	267	1	267.0	S355JN
W46	1	PL25*2150.0	4765	2002	1	2002.0	S355JN
W47	2	PL50*300.0	300	27	2	54.0	S355KN
W49	1	PL15*343.0	735	28	1	28.0	S355JN
W50	1	PL15*343.0	735	28	1	28.0	S355JN
WS1	1	PL15*343.0	735	29	1	29.0	S355JN
WS2	1	PL15*342.0	750	29	1	29.0	S355JN
WS7	2	PL25*400.0	1573	105	2	210.0	S355JN
WEB1	1	PL12*360.0	4760	159	1	159.0	S355JN
WP1	2	PL15*540.0	4097	260	2	520.0	S355JN
WP2	2	PL20*550.0	3319	286	2	572.0	S355JN
WP3	2	PL20*520.0	752	61	2	122.0	S355JN
WP4	2	PL12*360.0	447	15	2	30.0	S355JN
WP5	2	PL15*340.0	2576	103	2	206.0	S355JN
WP6	2	PL15*330.0	2628	102	2	204.0	S355JN
WP7	2	PL15*340.0	2580	103	2	206.0	S355JN
WP8	2	PL15*340.0	2631	105	2	210.0	S355JN
WP9	2	PL12*360.0	2580	87	2	174.0	S355JN
WP10	2	PL15*340.0	2612	104	2	208.0	S355JN
WP14	2	PL15*540.0	4086	260	2	520.0	S355JN
WP15	2	PL15*224.0	540	14	2	28.0	S355JN
WP16	2	PL30*510.0	4088	491	2	982.0	S355JN
WP20	2	PL20*550.0	3328	287	2	574.0	S355JN
WP25	2	PL20*550.0	3287	283	2	566.0	S355JN
WP26	1	PL30*510.0	2040	245	1	245.0	S355JN
WP27	1	PL15*330.0	2063	80	1	80.0	S355JN
WP29	1	PL30*510.0	2038	245	1	245.0	S355JN
XF1	8	PL15*662.0	700	26	8	208.0	S355JN
XF2	4	PL15*602.0	700	23	4	92.0	S355JN
XF3	4	PL15*603.0	700	23	4	92.0	S355JN
XF4	4	PL10*550.0	952	41	4	164.0	S355JN
XF5	12	PL15*670.0	700	26	12	312.0	S355JN
XF7	2	PL10*550.0	952	40	2	80.0	S355JN
XW1	4	PL10*570.0	945	41	4	164.0	S355JN
XW2	2	PL10*570.0	945	40	2	80.0	S355JN
XW5	2	PL10*570.0	945	40	2	80.0	S355JN
pl43	2	PL40*600.0	2095	368	2	736.0	S355JN
pl44	2	PL40*600.0	2095	372	2	744.0	S355JN
w2	2	PL35*1617.0	2810	938	2	1876.0	S355JN
w3	2	PL35*1637.0	2813	949	2	1898.0	S355JN
w4	2	PL35*1636.0	2813	951	2	1902.0	S355JN
				TOTAL WEIGHT :		70166.0	

-Drawing shall be updated according to the comments on the GA drawing.
-Approval is subjected to the approval of coordination package between multi-discipline.

REVIEWED WITH COMMENT MONORAILS PROJECT

1 Nos. REQUIRED AS DRAWN TR1

6 October Monorail Engineering Unit
Valid For Construction

GENERAL NOTES:

1. ALL DIMENSIONS ARE IN MILLIMETERS UNLESS OTHERWISE SPECIFIED.
2. LEVELS ARE IN METERS
3. DESIGN SERVICE LIFE OF 100 YEARS.
4. FLANGES OF TOP AND BOTTOM CHORDS TO BE SUPPLIED WITH IMPROVED THROUGH THICKNESS PROPERTIES Z25 ACCORDING TO EN10164.

REFERENCE DRAWINGS

1	93M-0407-SEN-6OL11-END-10118-B PAGE 01:17
2	
3	
4	
5	
6	
7	
8	
9	
10	
11	

6TH OF OCTOBER CITY RAIL TRANSIT MONORAIL &
NEW CAPITAL CITY RAIL TRANSIT MONORAIL

The Authority — Hill International Authority Consultant — ORASCOM CONSTRUCTION — BOMBARDIER Main Contractor — SENER SHAKER CONSULTANCY GROUP Designer

CONTRACTOR CONSULTANT

ENGINEERING HOUSE FOR CONSULTANCY

SCALE: AS SHOWN | SHOP DRAWING | DATE: 20.11.2024

REV	DATE	BY	DESCRIPTION	CHK	APD
A	20-11-24	E.SH	ISSUE FOR APPROVAL	A.SH	M.M

DRAWING TITLE:
6TH OF OCTOBER MONORAIL
SHOP DRAWING FOR BRIDGE 6OL11-37
STEEL TRUSS (II).
TR1

Project Code	Rubric	Initiator	Lot	Ref	Number	Revision
9 3 M	0 4 0 7	A A C	6 0 L 1 1	D W G	90192	A

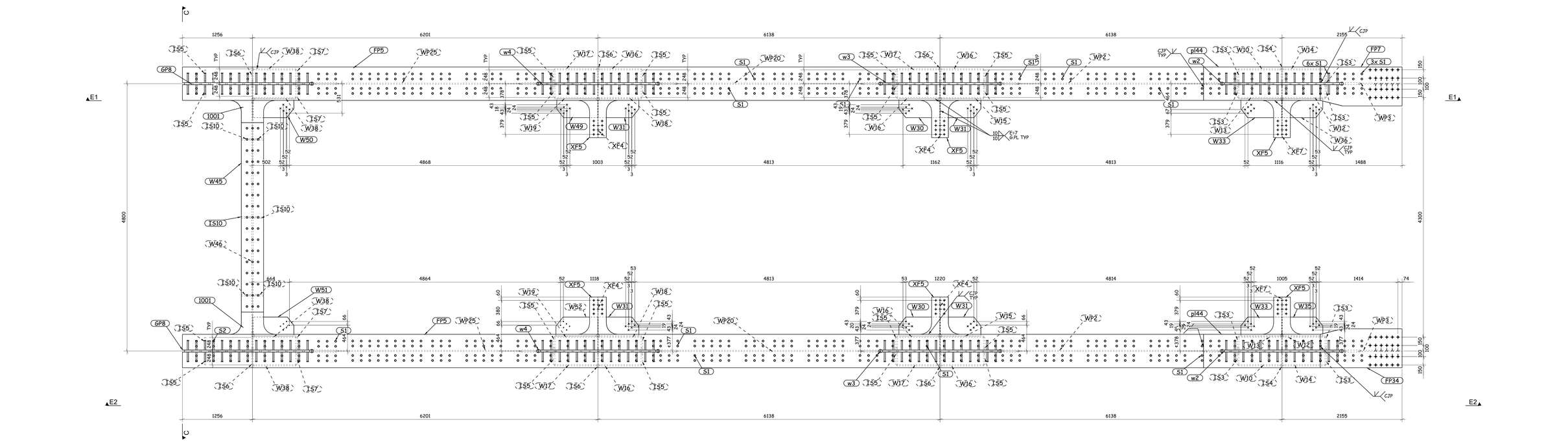

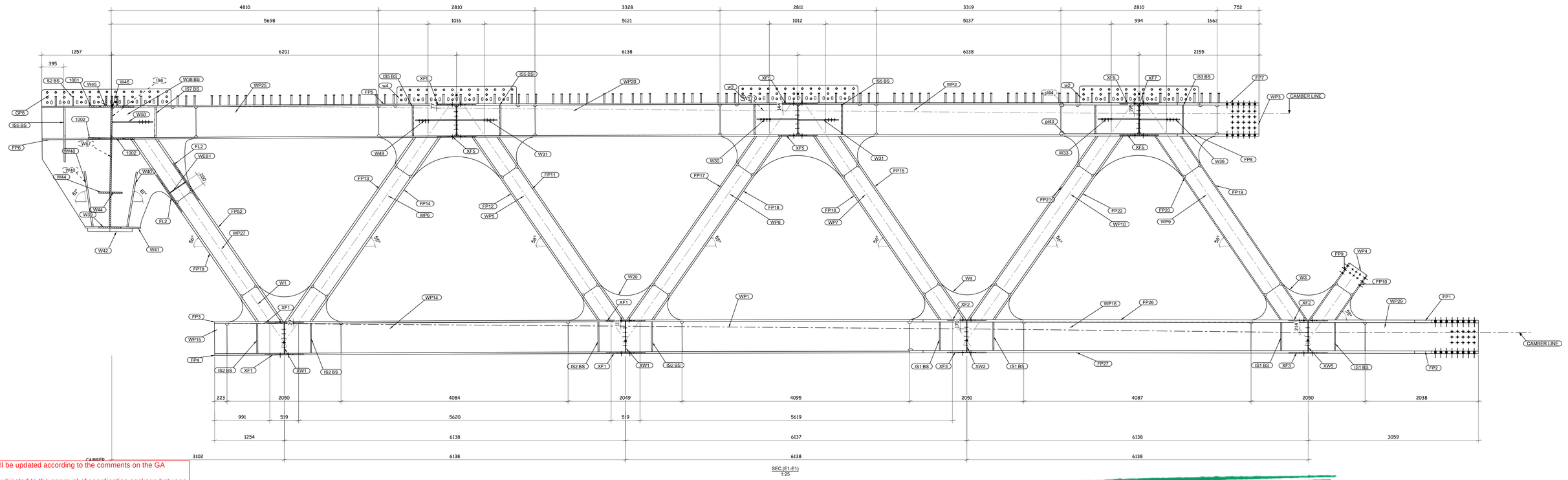

-Drawing shall be updated according to the comments on the GA drawing.
-Approval is subjected to the approval of coordination package between multi-discipline.

REVIEWED WITH COMMENT MONORAILS PROJECT

1 Nos. REQUIRED AS DRAWN TR1

6 October Monorail Engineering Unit
Valid For Construction

GENERAL NOTES:

1. ALL DIMENSIONS ARE IN MILLIMETERS UNLESS OTHERWISE SPECIFIED.
2. LEVELS ARE IN METERS
3. DESIGN SERVICE LIFE OF 100 YEARS.
4. FLANGES OF TOP AND BOTTOM CHORDS TO BE SUPPLIED WITH IMPROVED THROUGH THICKNESS PROPERTIES Z25 ACCORDING TO EN10164.

REFERENCE DRAWINGS

1	93M-0407-SEN-6OL11-END-10118-B PAGE 01:17
2	
3	
4	
5	
6	
7	
8	
9	
10	
11	

6TH OF OCTOBER CITY RAIL TRANSIT MONORAIL &
NEW CAPITAL CITY RAIL TRANSIT MONORAIL

The Authority — Hill International — Authority Consultant
ORASCOM CONSTRUCTION — BOMBARDIER — Main Contractor
SENER — SHAKER CONSULTANCY GROUP — Designer

CONTRACTOR
CONSULTANT: ENGINEERING HOUSE FOR CONSULTANCY

SCALE	SHOP DRAWING	DATE
AS SHOWN		20.11.2024

REV	DATE	BY	DESCRIPTION	CHK	APD
A	20-11-24	E.SH	ISSUE FOR APPROVAL	A.SH	M.M

DRAWING TITLE:
6TH OF OCTOBER MONORAIL
SHOP DRAWING FOR BRIDGE 6OL11-37
STEEL TRUSS (II).
TR1.2

Project Code	Rubric	Initiator	Lot	Ref	Number	Revision
9 3 M	0 4 0 7	A A C	6 0 L 1 1	D W G	90193	A

-Drawing shall be updated according to the comments on the GA drawing.
-Approval is subjected to the approval of coordination package between multi-discipline.

REVIEWED WITH COMMENT
MONORAILS PROJECT

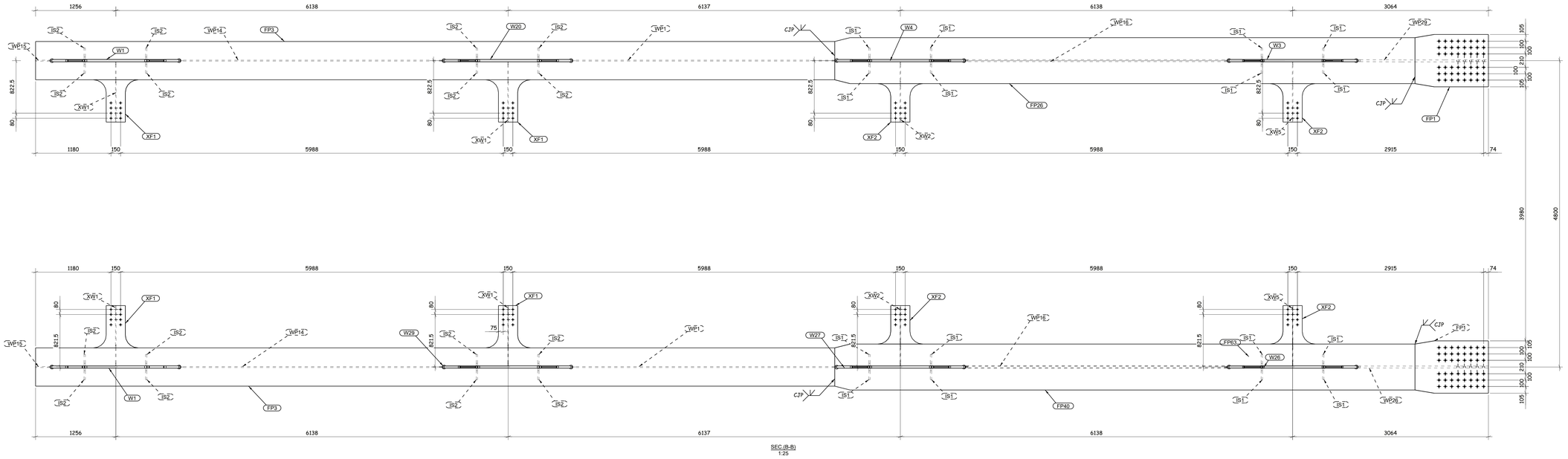

SEC.(B-B)
1:25

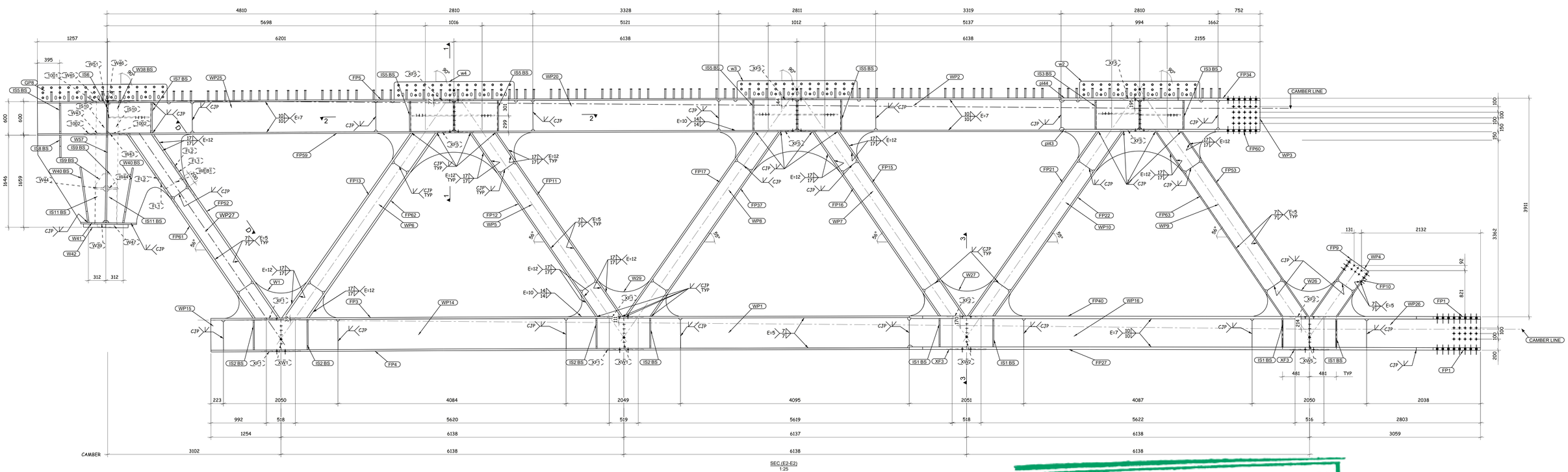

1 Nos. REQUIRED AS DRAWN TR1

GENERAL NOTES:

1. ALL DIMENSIONS ARE IN MILLIMETERS UNLESS OTHERWISE SPECIFIED.
2. LEVELS ARE IN METERS
3. DESIGN SERVICE LIFE OF 100 YEARS.
4. FLANGES OF TOP AND BOTTOM CHORDS TO BE SUPPLIED WITH IMPROVED THROUGH THICKNESS PROPERTIES Z25 ACCORDING TO EN10164.

REFERENCE DRAWINGS

1	93M-0407-SEN-6OL11-END-10118-B PAGE 01:17
2	
3	
4	
5	
6	
7	
8	
9	
10	
11	

6TH OF OCTOBER CITY RAIL TRANSIT MONORAIL &
NEW CAPITAL CITY RAIL TRANSIT MONORAIL

The Authority — Hill International Authority Consultant

Main Contractor

Designer

6 October Monorail
Engineering Unit
Valid For Construction

CONTRACTOR
CONSULTANT
ENGINEERING HOUSE FOR CONSULTANCY

SCALE: AS SHOWN | SHOP DRAWING | DATE: 20.11.2024

REV	DATE	BY	DESCRIPTION	CHK	APD
A	20-11-24	E.SH	ISSUE FOR APPROVAL	A.SH	M.M

DRAWING TITLE:
6TH OF OCTOBER MONORAIL
SHOP DRAWING FOR BRIDGE 6OL11-37
STEEL TRUSS (II).
TR1.3

Project Code	Rubric	Initiator	Lot	Ref	Number	Revision
9 3 M	0 4 0 7	A A C	6 0 L 1 1	D W G	90194	A

Data structures

-Drawing shall be updated according to the comments on the GA drawing.
-Approval is subjected to the approval of coordination package between multi-discipline.

REVIEWED WITH COMMENT
MONORAILS PROJECT

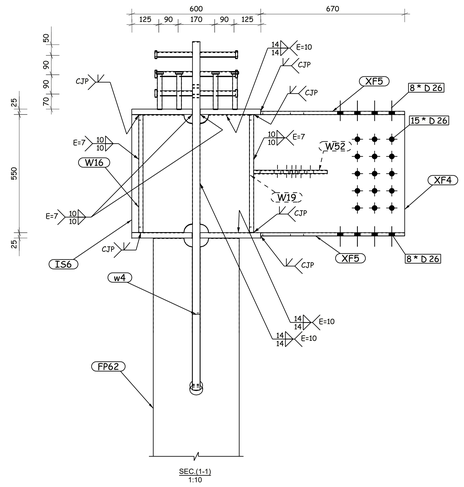

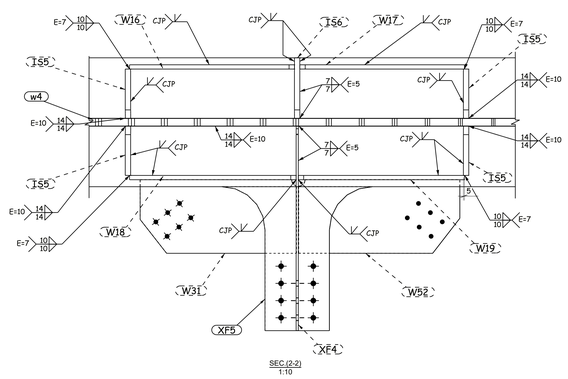

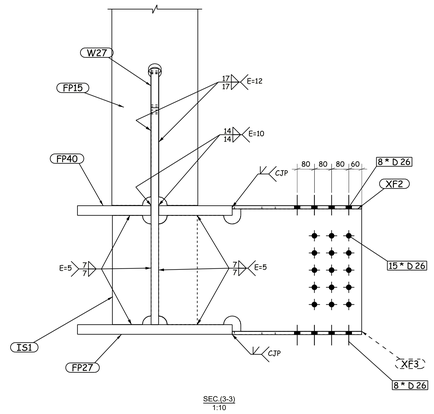

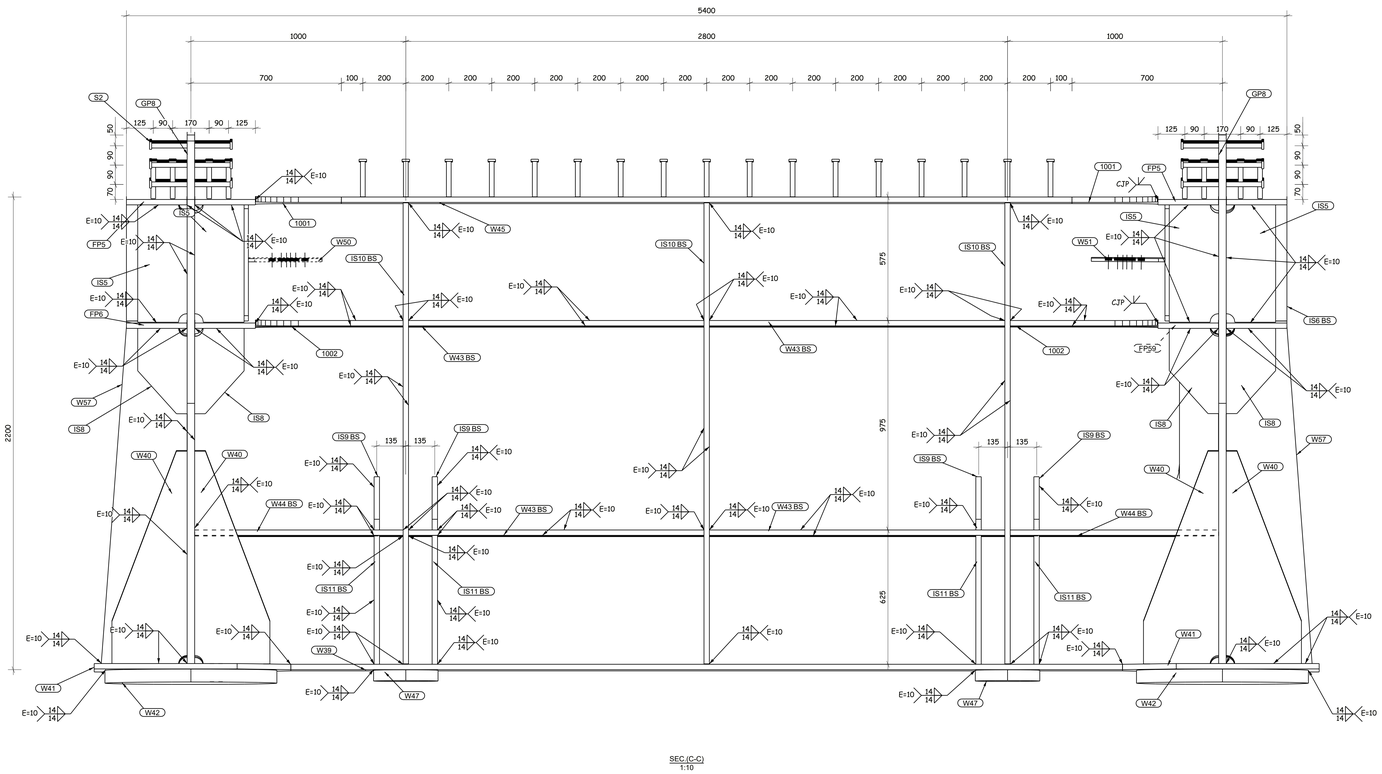

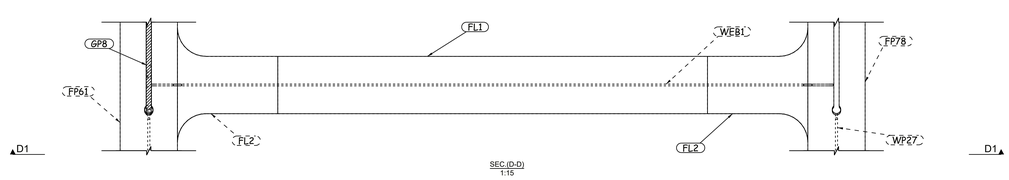

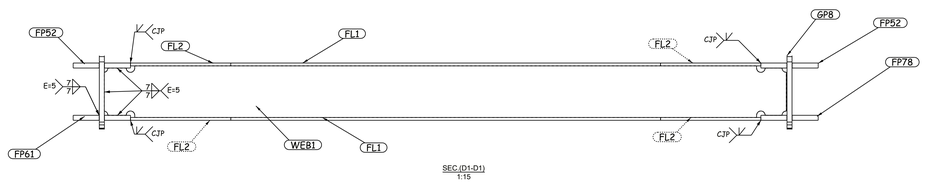

1 Nos. REQUIRED AS DRAWN TR1

GENERAL NOTES:

1. ALL DIMENSIONS ARE IN MILLIMETERS UNLESS OTHERWISE SPECIFIED.
2. LEVELS ARE IN METERS
3. DESIGN SERVICE LIFE OF 100 YEARS.
4. FLANGES OF TOP AND BOTTOM CHORDS TO BE SUPPLIED WITH IMPROVED THROUGH THICKNESS PROPERTIES Z25 ACCORDING TO EN10164.

REFERENCE DRAWINGS

1	93M-0407-SEN-6OL11-END-10118-B PAGE 01:17
2	
3	
4	
5	
6	
7	
8	
9	
10	
11	

6TH OF OCTOBER CITY RAIL TRANSIT MONORAIL &
NEW CAPITAL CITY RAIL TRANSIT MONORAIL

The Authority — Hill International Authority Consultant — ORASCOM CONSTRUCTION — BOMBARDIER — Main Contractor — SENER — SHAKER CONSULTANCY GROUP — Designer

CONTRACTOR
CONSULTANT
ENGINEERING HOUSE FOR CONSULTANCY

REV	DATE	BY	DESCRIPTION	CHK	APD
A	20-11-24	E.SH	ISSUE FOR APPROVAL	A.SH	M.M

SCALE: AS SHOWN | SHOP DRAWING | DATE: 20.11.2024

6 October Monorail
Engineering Unit
Valid For Construction

DRAWING TITLE:
6TH OF OCTOBER MONORAIL
SHOP DRAWING FOR BRIDGE 6OL11-37
STEEL TRUSS (II).
TR1.4

Project Code	Rubric	Initiator	Lot	Ref	Number	Revision
9 3 M	0 4 0 7	A A C	6 0 L 1 1	D W G	90195	A

Fields structure

-Drawing shall be updated according to the comments on the GA drawing.
-Approval is subjected to the approval of coordination package between multi-discipline.

REVIEWED WITH COMMENT
MONORAILS PROJECT

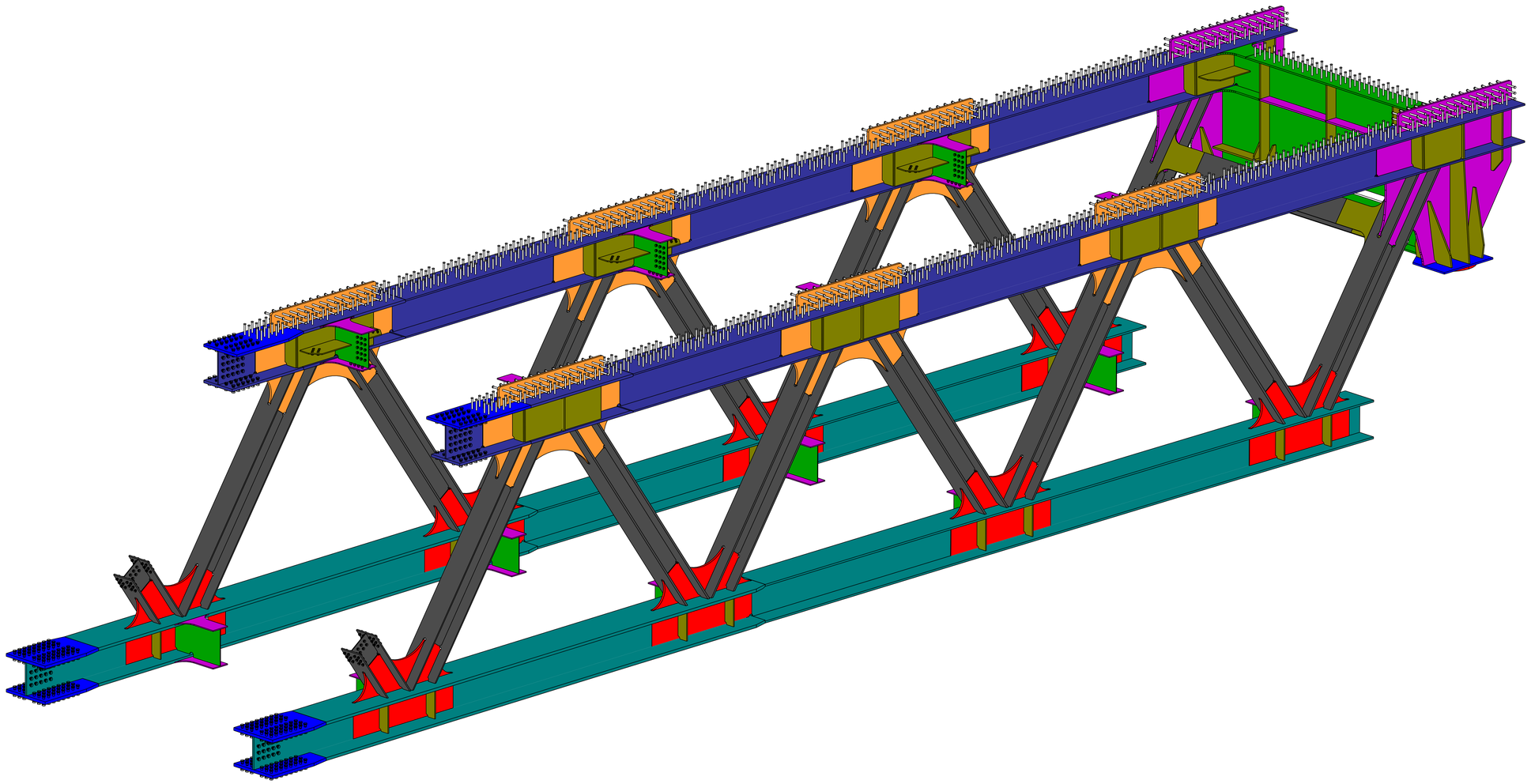

ISOMETRIC VIEW

ERECTION MARK : TR2 QTY : 1 NOS

POS NO.	QTY PER ASSLY	SECTION	LENGTH	UNIT WEIGHT (Kg)	TOTAL QTY	TOTAL WEIGHT	GRADE
WP31	1	PL15*330	2063	80	1	80.0	S355JN
1001	2	PL25*400.0	800	35	2	70.0	S355JN
1002	4	PL25*400.0	688	29	4	116.0	S355JN
FL1	2	PL20*400.0	3000	188	2	376.0	S355JN
FL2	4	PL20*700.0	800	47	4	188.0	S355JN
FP1	4	PL45*620.0	1149	327	4	1308.0	S355JN
FP4	2	PL30*600.0	12501	1766	2	3532.0	S355JN
FP5	2	PL25*600.0	18326	2108	2	4216.0	S355JN
FP9	2	PL20*400.0	1257	73	2	146.0	S355JN
FP10	2	PL20*400.0	991	58	2	116.0	S355JN
FP11	2	PL30*400.0	4013	362	2	724.0	S355JN
FP12	2	PL30*400.0	4013	362	2	724.0	S355JN
FP13	1	PL35*400.0	4063	427	1	427.0	S355JN
FP13	1	PL35*400.0	4063	428	1	428.0	S355JN
FP14	1	PL35*400.0	4063	427	1	427.0	S355JN
FP17	2	PL30*400.0	4053	366	2	732.0	S355JN
FP18	1	PL30*400.0	4053	366	1	366.0	S355JN
FP19	2	PL20*400.0	4019	242	2	484.0	S355JN
FP20	2	PL20*400.0	4019	242	2	484.0	S355JN
FP26	1	PL45*720.0	9079	2248	1	2248.0	S355KN
FP27	2	PL45*720.0	9077	2301	2	4602.0	S355KN
FP28	2	PL30*400.0	4020	363	2	726.0	S355JN
FP29	2	PL30*400.0	4050	365	2	730.0	S355JN
FP32	2	PL30*600.0	12504	1730	2	3460.0	S355JN
FP33	1	PL25*600.0	18321	2096	1	2096.0	S355JN
FP34	2	PL40*700.0	1467	311	2	622.0	S355JN
FP35	1	PL40*600.0	1467	268	1	268.0	S355JN
FP36	2	PL30*400.0	4018	362	2	724.0	S355JN
FP37	1	PL30*400.0	4053	366	1	366.0	S355JN
FP38	2	PL30*400.0	4050	366	2	732.0	S355JN
FP40	1	PL45*720.0	9079	2248	1	2248.0	S355KN
FP52	1	PL35*400.0	4010	417	1	417.0	S355JN
FP61	1	PL35*400.0	4009	416	1	416.0	S355JN
FP62	1	PL35*400.0	4063	427	1	427.0	S355JN
FP66	1	PL25*600.0	18321	2096	1	2096.0	S355JN
FP67	1	PL40*600.0	1467	268	1	268.0	S355JN
FP79	1	PL35*400.0	4010	416	1	416.0	S355JN
FP80	1	PL35*400.0	4009	416	1	416.0	S355JN
GP10	2	PL35*2480.0	2771	1519	2	3038.0	S355JN
IS1	16	PL20*180.0	508	14	16	224.0	S355JN
IS2	16	PL20*180.0	538	15	16	240.0	S355JN
IS3	8	PL25*230.0	518	23	8	184.0	S355JN
IS4	2	PL25*283.0	518	28	2	56.0	S355JN
IS5	20	PL25*230.0	548	24	20	480.0	S355JN
IS6	6	PL25*283.0	548	30	6	180.0	S355JN
IS7	4	PL30*230.0	548	29	4	116.0	S355JN
IS8	4	PL25*230.0	230	14	4	56.0	S355JN
IS9	8	PL25*180.0	250	6	8	48.0	S355JN
IS10	6	PL25*185.0	2146	77	6	462.0	S355JN
IS11	8	PL25*180.0	600	21	8	168.0	S355JN
S1	1060	ROD22	175	1	1060	1060.0	S235JOG3
S2	231	ROD22	175	1	231	231.0	S235JOG3
W1	2	PL35*1212.0	2050	543	2	1086.0	S355JN
W10	2	PL20*518.0	769	62	2	124.0	S355JN
W12	2	PL20*518.0	772	63	2	126.0	S355JN
W13	2	PL20*518.0	776	63	2	126.0	S355JN
W14	2	PL20*518.0	764	62	2	124.0	S355JN
W15	2	PL20*548.0	781	67	2	134.0	S355JN
W16	6	PL20*548.0	768	66	6	396.0	S355JN
W17	4	PL20*548.0	766	66	4	264.0	S355JN
W18	2	PL20*548.0	775	67	2	134.0	S355JN
W19	2	PL20*548.0	773	66	2	132.0	S355JN
W21	2	PL35*1195.0	2050	538	2	1076.0	S355JN
W22	1	PL35*1192.0	2051	536	1	536.0	S355JN
W24	2	PL35*1206.0	2051	542	2	1084.0	S355JN
W28	1	PL35*1192.0	2051	536	1	536.0	S355JN
W31	2	PL15*343.0	727	28	2	56.0	S355JN
W33	2	PL15*343.0	732	28	2	56.0	S355JN
W35	1	PL15*343.0	727	28	1	28.0	S355JN
W36	1	PL15*343.0	727	28	1	28.0	S355JN
W39	1	PL25*400.0	3870	304	1	304.0	S355JN
W40	8	PL25*350.0	1000	45	8	360.0	S355JN
W41	2	PL25*915.0	1000	165	2	330.0	S355JN
W42	2	PL60*800.0	800	235	2	470.0	S355KN
W43	8	PL25*200.0	1375	54	8	432.0	S355JN
W44	4	PL25*200.0	970	38	4	152.0	S355JN
W45	1	PL25*400.0	3400	267	1	267.0	S355JN
W46	1	PL25*2150.0	4765	2002	1	2002.0	S355JN
W47	2	PL60*300.0	300	27	2	54.0	S355KN
W48	4	PL20*548.0	776	66	4	264.0	S355JN
W49	1	PL15*343.0	735	28	1	28.0	S355JN
W52	1	PL15*342.0	750	29	1	29.0	S355JN
W53	1	PL15*343.0	735	28	1	28.0	S355JN
W54	1	PL15*343.0	735	29	1	29.0	S355JN
W55	2	PL15*343.0	735	28	2	56.0	S355JN
W56	2	PL15*343.0	735	28	2	56.0	S355JN
W57	2	PL25*400.0	1573	105	2	210.0	S355JN
WEB1	1	PL12*360.0	4760	159	1	159.0	S355JN
WP1	2	PL15*540.0	4097	260	2	520.0	S355JN
WP2	2	PL20*550.0	3319	286	2	572.0	S355JN
WP3	2	PL20*520.0	752	61	2	122.0	S355JN
WP4	2	PL12*360.0	447	15	2	30.0	S355JN
WP5	2	PL15*340.0	2576	103	2	206.0	S355JN
WP6	2	PL15*330.0	2628	102	2	204.0	S355JN
WP7	2	PL15*340.0	2580	103	2	206.0	S355JN
WP8	2	PL15*340.0	2631	105	2	210.0	S355JN
WP9	2	PL12*360.0	2580	87	2	174.0	S355JN
WP10	2	PL15*340.0	2612	104	2	208.0	S355JN
WP14	2	PL15*540.0	4086	260	2	520.0	S355JN
WP15	2	PL15*224.0	540	14	2	28.0	S355JN
WP16	2	PL30*510.0	4088	491	2	982.0	S355JN
WP20	2	PL20*550.0	3328	287	2	574.0	S355JN
WP26	1	PL30*510.0	2040	245	1	245.0	S355JN
WP28	2	PL20*550.0	3286	283	2	566.0	S355JN
WP30	1	PL30*510.0	2040	245	1	245.0	S355JN
WP31	1	PL15*330.0	2063	80	1	80.0	S355JN
XF1	8	PL15*662.0	700	26	8	208.0	S355JN
XF2	4	PL15*602.0	700	23	4	92.0	S355JN
XF3	4	PL15*603.0	700	23	4	92.0	S355JN
XF4	4	PL10*550.0	952	41	4	164.0	S355JN
XF5	12	PL15*670.0	700	26	12	312.0	S355JN
XF7	2	PL10*550.0	952	40	2	80.0	S355JN
XW1	4	PL10*570.0	945	41	4	164.0	S355JN
XW2	2	PL10*570.0	945	40	2	80.0	S355JN
XW5	2	PL10*570.0	945	40	2	80.0	S355JN
pl43	2	PL40*600.0	2095	368	2	736.0	S355JN
pl44	2	PL40*600.0	2095	372	2	744.0	S355JN
w3	2	PL35*1637.0	2813	949	2	1898.0	S355JN
w4	2	PL35*1636.0	2813	951	2	1902.0	S355JN
w5	2	PL35*1618.0	2810	938	2	1876.0	S355JN
				TOTAL WEIGHT		70161.0	

1 Nos. REQUIRED AS DRAWN TR2

GENERAL NOTES:

1. ALL DIMENSIONS ARE IN MILLIMETERS UNLESS OTHERWISE SPECIFIED.
2. LEVELS ARE IN METERS
3. DESIGN SERVICE LIFE OF 100 YEARS.
4. FLANGES OF TOP AND BOTTOM CHORDS TO BE SUPPLIED WITH IMPROVED THROUGH THICKNESS PROPERTIES Z25 ACCORDING TO EN10164.

REFERENCE DRAWINGS

1	93M-0407-SEN-6OL11-END-10118-B PAGE 01:17
2	
3	
4	
5	
6	
7	
8	
9	
10	
11	

6TH OF OCTOBER CITY RAIL TRANSIT MONORAIL &
NEW CAPITAL CITY RAIL TRANSIT MONORAIL

The Authority — Hill International — Authority Consultant
Main Contractor
Designer

6 October Monorail Engineering Unit
Valid For Construction

CONTRACTOR
CONSULTANT: EHC ENGINEERING HOUSE FOR CONSULTANCY

SCALE	SHOP DRAWING	DATE
AS SHOWN		20.11.2024

REV	DATE	BY	DESCRIPTION	CHK	APD
A	20-11-24	E.SH	ISSUE FOR APPROVAL	A.SH	M.M

DRAWING TITLE:
6TH OF OCTOBER MONORAIL
SHOP DRAWING FOR BRIDGE 6OL11-37
STEEL TRUSS (II).
TR2

Project Code	Rubric	Initiator	Lot	Ref	Number	Revision
9 3 M 0	4 0 7	A A C	6 0 L 1 1	D W G	90196	A

-Drawing shall be updated according to the comments on the GA drawing.
-Approval is subjected to the approval of coordination package between multi-discipline.

REVIEWED WITH COMMENT
MONORAILS PROJECT

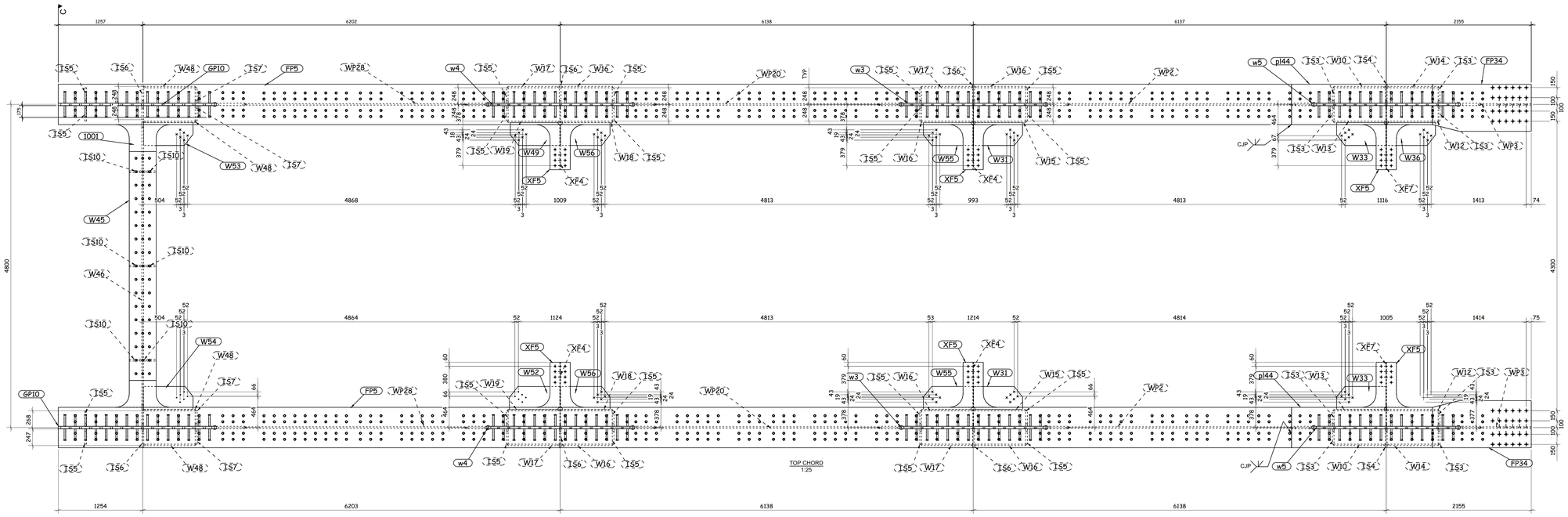

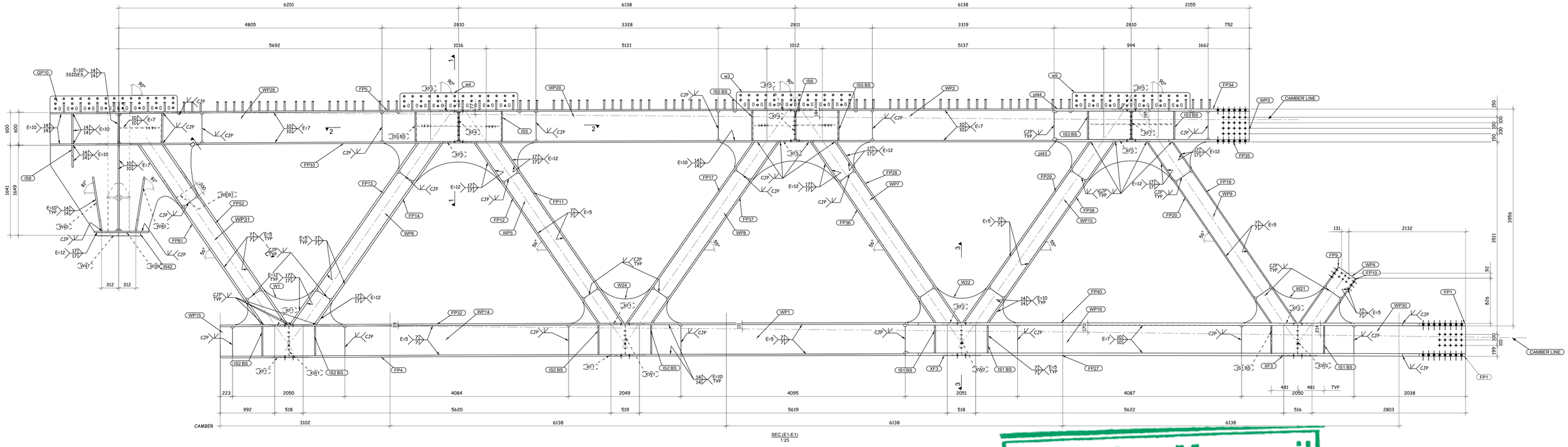

1 Nos. REQUIRED AS DRAWN TR2

GENERAL NOTES:

1. ALL DIMENSIONS ARE IN MILLIMETERS UNLESS OTHERWISE SPECIFIED.
2. LEVELS ARE IN METERS
3. DESIGN SERVICE LIFE OF 100 YEARS.
4. FLANGES OF TOP AND BOTTOM CHORDS TO BE SUPPLIED WITH IMPROVED THROUGH THICKNESS PROPERTIES Z25 ACCORDING TO EN10164.

REFERENCE DRAWINGS

1	93M-0407-SEN-6OL11-END-10118-B PAGE 01:17
2	
3	
4	
5	
6	
7	
8	
9	
10	
11	

6TH OF OCTOBER CITY RAIL TRANSIT MONORAIL &
NEW CAPITAL CITY RAIL TRANSIT MONORAIL

The Authority
Hill International
Authority Consultant

Main Contractor

Designer

6 October Monorail Engineering Unit
Valid For Construction

CONTRACTOR
CONSULTANT

ENGINEERING HOUSE FOR CONSULTANCY

SCALE	SHOP DRAWING	DATE
AS SHOWN		20.11.2024

REV	DATE	BY	DESCRIPTION	CHK	APD
A	20-11-24	E.SH	ISSUE FOR APPROVAL	A.SH	M.M

DRAWING TITLE:
6TH OF OCTOBER MONORAIL
SHOP DRAWING FOR BRIDGE 6OL11-37
STEEL TRUSS (II).
TR2.2

Project Code	Rubric	Initiator	Lot	Ref	Number	Revision
9 3 M	0 4 0 7	A A C	6 0 L 1 1	D W G	90197	A

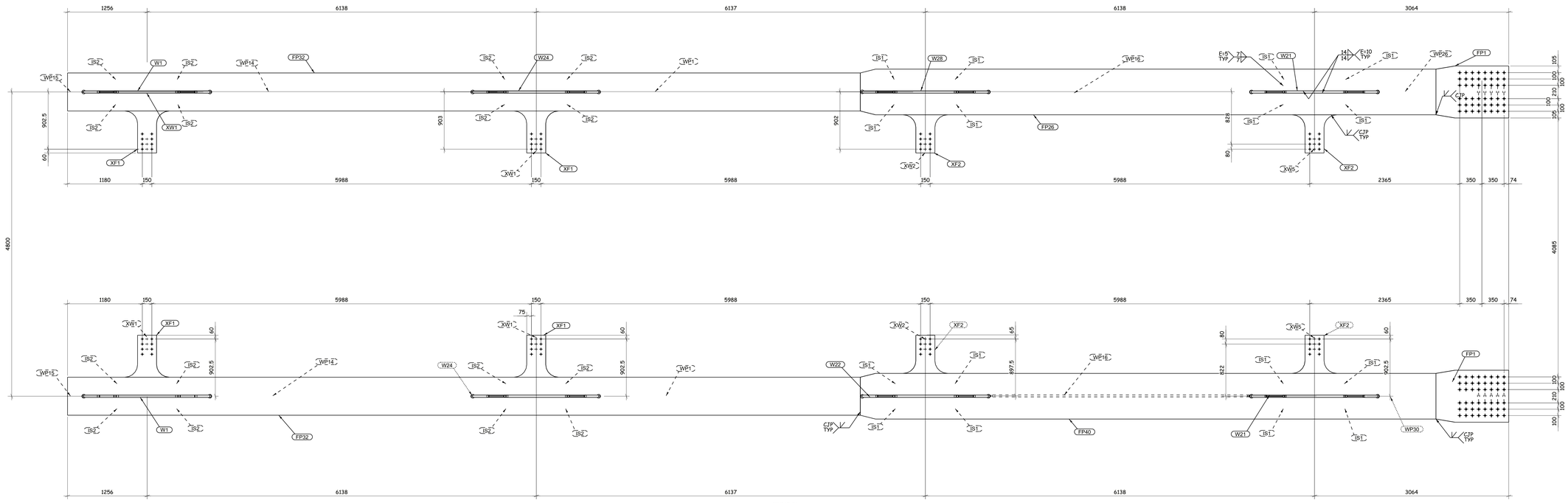

1 Nos. REQUIRED AS DRAWN TR2

-Drawing shall be updated according to the comments on the GA drawing.
-Approval is subjected to the approval of coordination package between multi-discipline.

REVIEWED WITH COMMENT
MONORAILS PROJECT

GENERAL NOTES:

1. ALL DIMENSIONS ARE IN MILLIMETERS UNLESS OTHERWISE SPECIFIED.
2. LEVELS ARE IN METERS
3. DESIGN SERVICE LIFE OF 100 YEARS.
4. FLANGES OF TOP AND BOTTOM CHORDS TO BE SUPPLIED WITH IMPROVED THROUGH THICKNESS PROPERTIES Z25 ACCORDING TO EN10164.

REFERENCE DRAWINGS

1	93M-0407-SEN-6OL11-END-10118-B PAGE 01:17
2	
3	
4	
5	
6	
7	
8	
9	
10	
11	

6TH OF OCTOBER CITY RAIL TRANSIT MONORAIL &
NEW CAPITAL CITY RAIL TRANSIT MONORAIL

The Authority
Hill International
Authority Consultant

Main Contractor

Designer

6 October Monorail
Engineering Unit
Valid For Construction

CONTRACTOR
CONSULTANT
ENGINEERING HOUSE FOR CONSULTANCY

SCALE: AS SHOWN
SHOP DRAWING
DATE: 20.11.2024

REV	DATE	BY	DESCRIPTION	CHK	APD
A	20-11-24	E.SH	ISSUE FOR APPROVAL	A.SH	M.M

DRAWING TITLE:
6TH OF OCTOBER MONORAIL
SHOP DRAWING FOR BRIDGE 6OL11-37
STEEL TRUSS (II).
TR2.3

Project Code	Rubric	Initiator	Lot	Ref	Number	Revision
93M	0407	AAC	6OL11	DWG	90198	A

-Drawing shall be updated according to the comments on the GA drawing.
-Approval is subjected to the approval of coordination package between multi-discipline.

REVIEWED WITH COMMENT
MONORAILS PROJECT

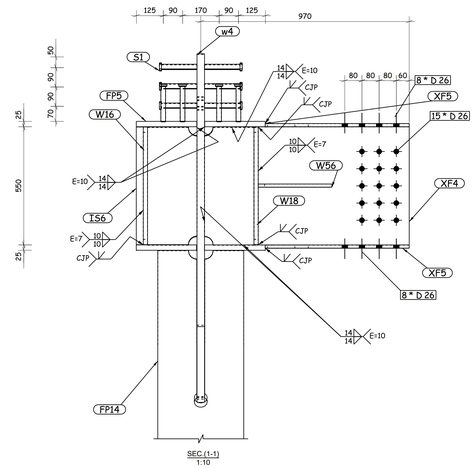

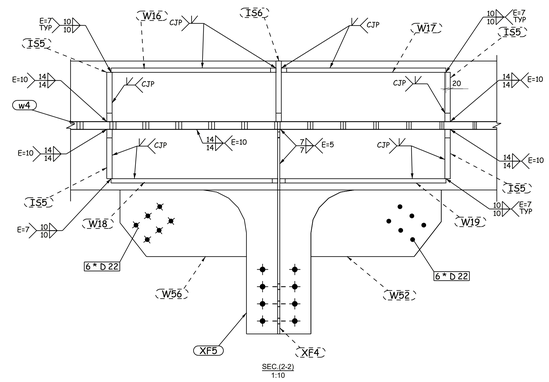

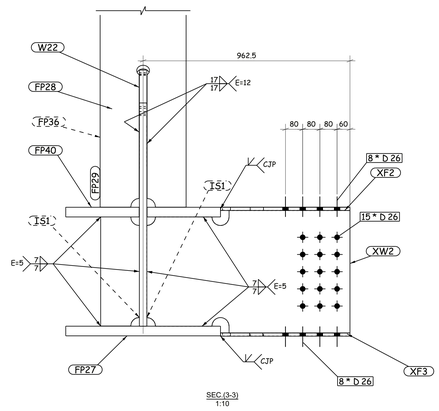

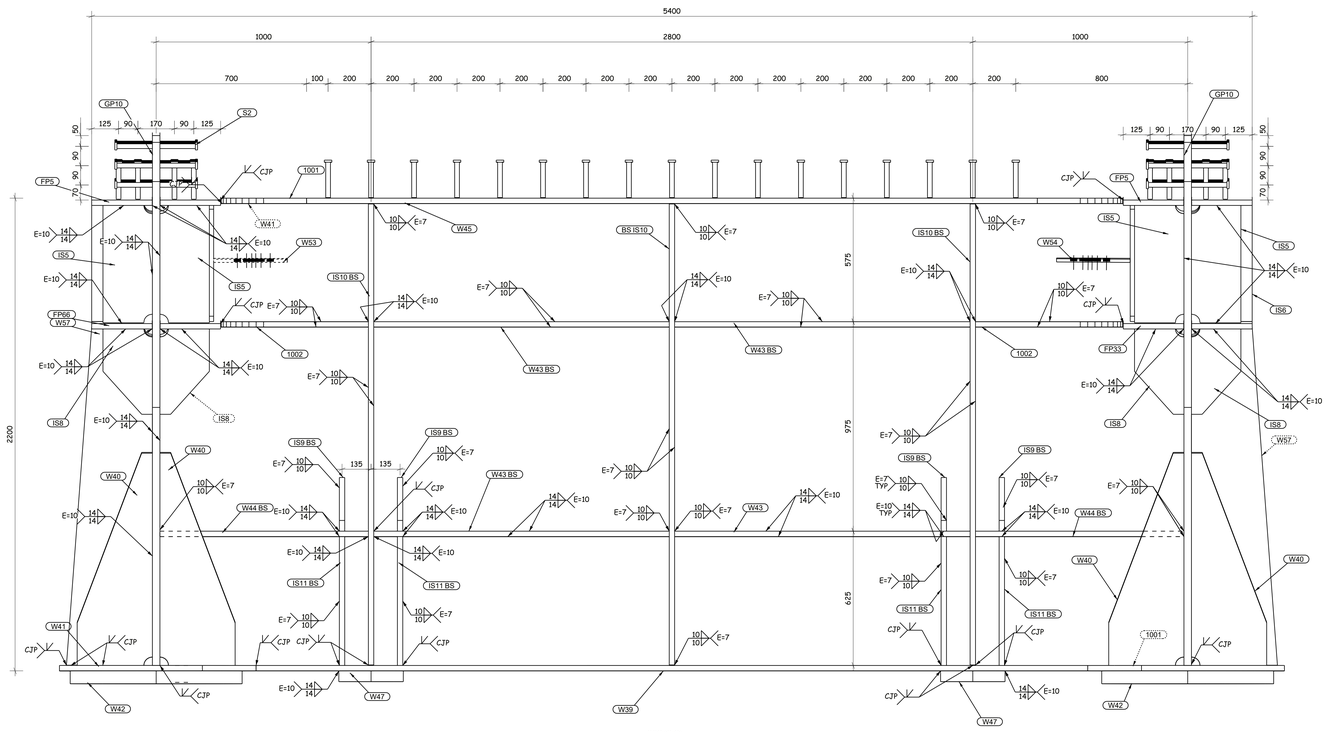

1 Nos. REQUIRED AS DRAWN TR2

GENERAL NOTES:

1. ALL DIMENSIONS ARE IN MILLIMETERS UNLESS OTHERWISE SPECIFIED.
2. LEVELS ARE IN METERS
3. DESIGN SERVICE LIFE OF 100 YEARS.
4. FLANGES OF TOP AND BOTTOM CHORDS TO BE SUPPLIED WITH IMPROVED THROUGH THICKNESS PROPERTIES Z25 ACCORDING TO EN10164.

REFERENCE DRAWINGS

1	93M-0407-SEN-6OL11-END-10118-B PAGE 01:17
2	
3	
4	
5	
6	
7	
8	
9	
10	
11	

6TH OF OCTOBER CITY RAIL TRANSIT MONORAIL &
NEW CAPITAL CITY RAIL TRANSIT MONORAIL

The Authority — Authority Consultant
Main Contractor
Designer

6 October Monorail Engineering Unit
Valid For Construction

CONTRACTOR
CONSULTANT
ENGINEERING HOUSE FOR CONSULTANCY

SCALE: AS SHOWN | SHOP DRAWING | DATE: 20.11.2024

REV	DATE	BY	DESCRIPTION	CHK	APD
A	20-11-24	E.SH	ISSUE FOR APPROVAL	A.SH	M.M

DRAWING TITLE:
6TH OF OCTOBER MONORAIL
SHOP DRAWING FOR BRIDGE 6OL11-37
STEEL TRUSS (II).
TR2.4

Project Code	Rubric	Initiator	Lot	Ref	Number	Revision
9 3 M	0 4 0 7	A A C	6 0 L 1 1	D W G	90199	A

-Drawing shall be updated according to the comments on the GA drawing.
-Approval is subjected to the approval of coordination package between multi-discipline.

REVIEWED WITH COMMENT
MONORAILS PROJECT

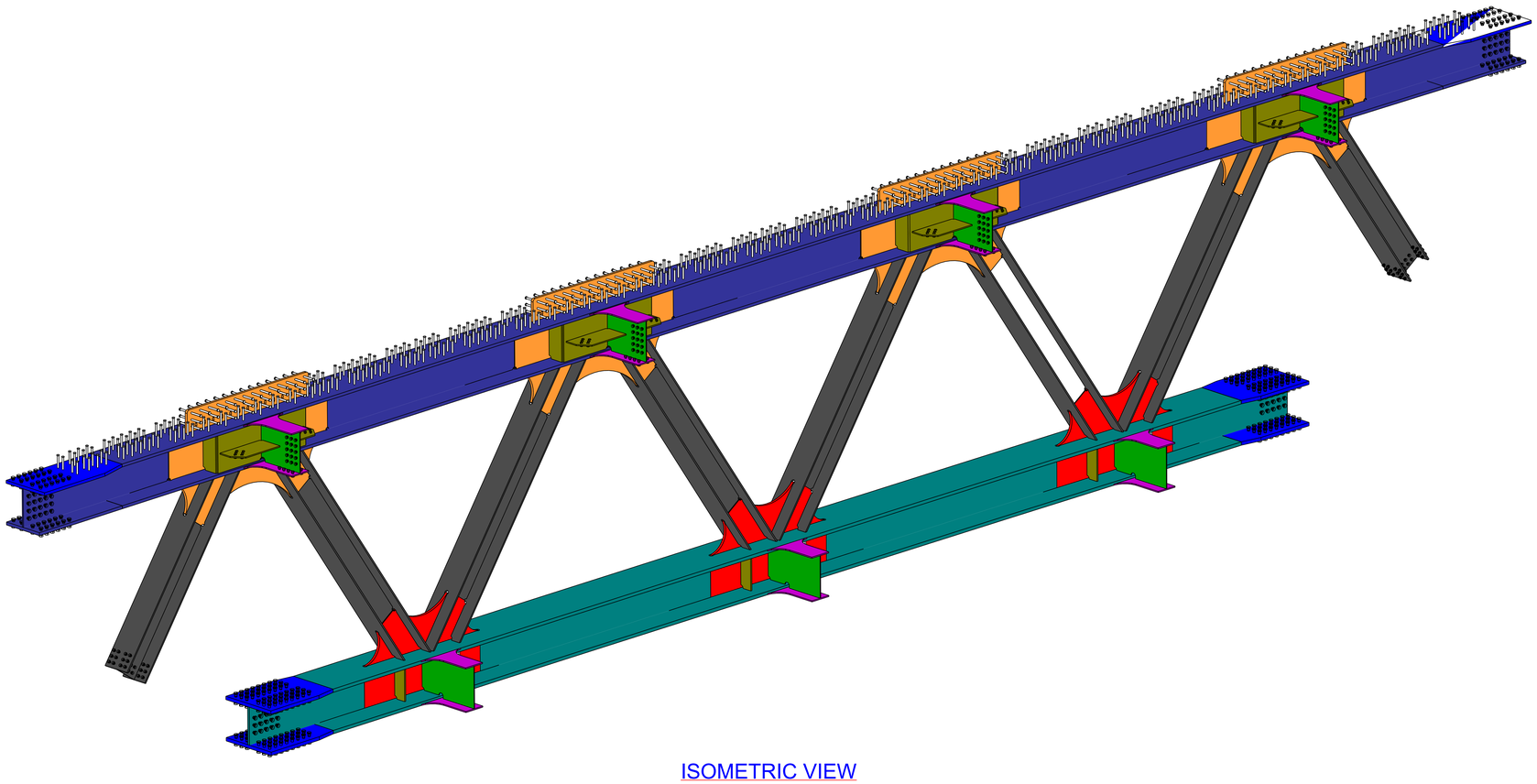

ISOMETRIC VIEW

ERECTION MARK : TR3 QTY : 1 NOS

POS NO.	QTY PER ASSLY	SECTION	LENGTH	UNIT WEIGHT (Kg)	TOTAL QTY	TOTAL WEIGHT	GRADE
WP11	1	PL12*360	2593	88	1	88.0	S355J2N
FP23	1	PL20*400.0	4022	242	1	242.0	S355J2N
FP24	1	PL20*400.0	4020	242	1	242.0	S355J2N
FP25	4	PL45*820.0	1151	328	4	1312.0	S355J2N
FP30	1	PL20*400.0	4025	243	1	243.0	S355J2N
FP31	1	PL20*400.0	4021	242	1	242.0	S355J2N
FP39	1	PL20*400.0	4021	242	1	242.0	S355J2N
FP41	1	PL40*600.0	23420	4308	1	4308.0	S355J2N
FP42	1	PL40*600.0	20913	3824	1	3824.0	S355J2N
FP43	1	PL40*600.0	2501	455	1	455.0	S355J2N
FP44	2	PL20*400.0	3036	185	2	370.0	S355J2N
FP45	2	PL20*400.0	2772	169	2	338.0	S355J2N
FP51	1	PL20*400.0	4032	243	1	243.0	S355J2N
FP54	1	PL20*400.0	4025	243	1	243.0	S355J2N
FP64	1	PL20*400.0	4025	243	1	243.0	S355J2N
FP71	1	PL45*720.0	16099	4095	1	4095.0	S355K2N
FP72	1	PL20*400.0	4025	243	1	243.0	S355J2N
FP73	1	PL20*400.0	4032	243	1	243.0	S355J2N
FP75	1	PL20*400.0	4031	243	1	243.0	S355J2N
FP77	1	PL20*400.0	4019	242	1	242.0	S355J2N
FP81	1	PL45*720.0	16104	4014	1	4014.0	S355K2N
IS1	13	PL20*180.0	508	14	13	182.0	S355J2N
IS3	16	PL25*230.0	518	23	16	368.0	S355J2N
IS4	4	PL25*283.0	518	28	4	112.0	S355J2N
S1	696	ROD22	175	1	696	696.0	S235J2G3
W2	1	PL35*1192.0	2051	537	1	537.0	S355J2N
W5	1	PL35*1192.0	2050	536	1	536.0	S355J2N
W6	4	PL20*518.0	774	63	4	252.0	S355J2N
W7	4	PL20*518.0	768	62	4	248.0	S355J2N
W8	2	PL20*518.0	766	62	2	124.0	S355J2N
W9	2	PL20*519.0	780	63	2	126.0	S355J2N
W10	2	PL20*518.0	769	62	2	124.0	S355J2N
W11	2	PL20*518.0	760	62	2	124.0	S355J2N
W23	1	PL35*1192.0	2050	536	1	536.0	S355J2N
W31	3	PL15*343.0	727	28	3	84.0	S355J2N
W34	2	PL15*343.0	732	28	2	56.0	S355J2N
W37	3	PL15*343.0	732	28	3	84.0	S355J2N
WP11	1	PL12*360.0	2593	88	1	88.0	S355J2N
WP12	2	PL12*360.0	2588	87	2	174.0	S355J2N
WP13	1	PL30*510.0	4088	491	1	491.0	S355J2N
WP17	2	PL30*510.0	2039	245	2	490.0	S355J2N
WP18	2	PL20*520.0	3324	271	2	542.0	S355J2N
WP19	2	PL20*520.0	2572	210	2	420.0	S355J2N
WP21	1	PL30*510.0	4088	491	1	491.0	S355J2N
WP22	1	PL20*520.0	3327	271	1	271.0	S355J2N
WP23	2	PL12*360.0	2145	73	2	146.0	S355J2N
WP24	1	PL12*360.0	2600	88	1	88.0	S355J2N
WP32	1	PL12*360.0	2600	88	1	88.0	S355J2N
XF2	3	PL15*603.0	700	23	3	69.0	S355J2N
XF3	3	PL15*603.0	700	23	3	69.0	S355J2N
XF5	8	PL15*670.0	700	26	8	208.0	S355J2N
XF7	2	PL10*550.0	952	40	2	80.0	S355J2N
XF8	1	PL10*550.0	952	40	1	40.0	S355J2N
XF10	1	PL10*550.0	952	40	1	40.0	S355J2N
XW2	2	PL10*570.0	945	40	2	80.0	S355J2N
XW6	1	PL10*570.0	945	40	1	40.0	S355J2N
pl41	2	PL40*600.0	1471	277	2	554.0	S355J2N
pl42	2	PL40*700.0	1471	317	2	634.0	S355J2N
w1	1	PL35*1614.0	2810	938	1	938.0	S355J2N
w6	2	PL35*1613.0	2810	937	2	1874.0	S355J2N
w7	1	PL35*1614.0	2810	937	1	937.0	S355J2N
				TOTAL WEIGHT :-		34756.0	

1 Nos. REQUIRED AS DRAWN TR3

GENERAL NOTES:

1. ALL DIMENSIONS ARE IN MILLIMETERS UNLESS OTHERWISE SPECIFIED.
2. LEVELS ARE IN METERS
3. DESIGN SERVICE LIFE OF 100 YEARS.
4. FLANGES OF TOP AND BOTTOM CHORDS TO BE SUPPLIED WITH IMPROVED THROUGH THICKNESS PROPERTIES Z25 ACCORDING TO EN10164.

REFERENCE DRAWINGS

1	93M-0407-SEN-6OL11-END-10118-B PAGE 01:17
2	
3	
4	
5	
6	
7	
8	
9	
10	
11	

6TH OF OCTOBER CITY RAIL TRANSIT MONORAIL &
NEW CAPITAL CITY RAIL TRANSIT MONORAIL

The Authority — Hill International Authority Consultant — ORASCOM CONSTRUCTION — BOMBARDIER — Main Contractor — SENER SHAKER CONSULTANCY GROUP — Designer

CONTRACTOR
CONSULTANT
ENGINEERING HOUSE FOR CONSULTANCY

6 October Monorail Engineering Unit
Valid For Construction

REV	DATE	BY	DESCRIPTION	CHK	APD
A	20-11-24	E.SH	ISSUE FOR APPROVAL	A.SH	M.M

SCALE: AS SHOWN | SHOP DRAWING | DATE: 20.11.2024

DRAWING TITLE:
6TH OF OCTOBER MONORAIL
SHOP DRAWING FOR BRIDGE 6OL11-37
STEEL TRUSS (II).
TR3.1

Project Code	Rubric	Initiator	Lot	Ref	Number	Revision
93M	0407	AAC	60L11	DWG	90200	A

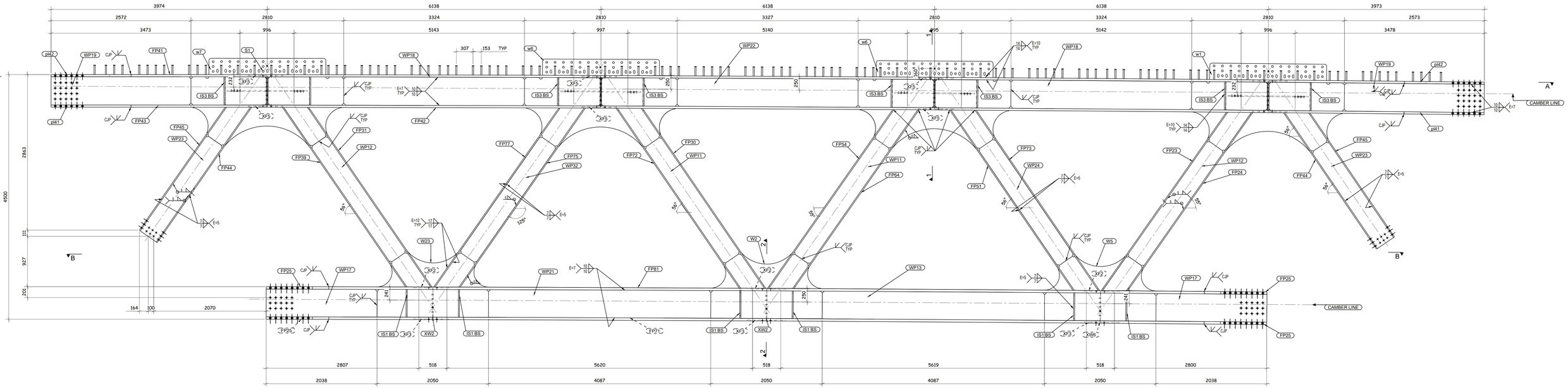

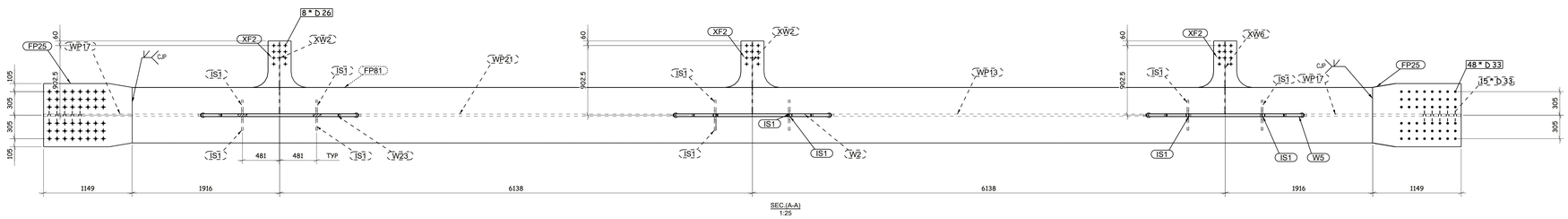

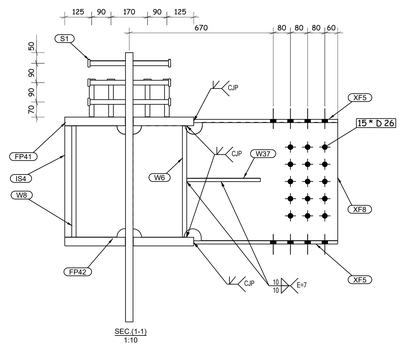

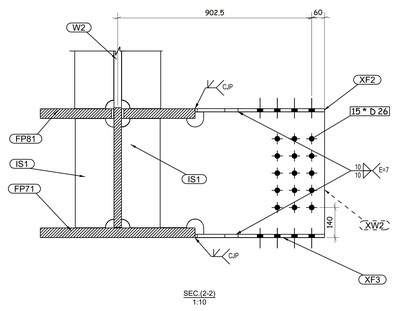

REVIEWED WITH COMMENT MONORAILS PROJECT

1 Nos. REQUIRED AS DRAWN TR3

Drawing should be cancelled and sent on a different package with GA drawings & Assemblies for this truss type.

6 October Monorail Engineering Unit Valid For Construction

GENERAL NOTES:

1. ALL DIMENSIONS ARE IN MILLIMETERS UNLESS OTHERWISE SPECIFIED.
2. LEVELS ARE IN METERS
3. DESIGN SERVICE LIFE OF 100 YEARS.
4. FLANGES OF TOP AND BOTTOM CHORDS TO BE SUPPLIED WITH IMPROVED THROUGH THICKNESS PROPERTIES Z25 ACCORDING TO EN10164.

REFERENCE DRAWINGS

1	93M-0407-SEN-6OL11-END-10118-B PAGE 01:17
2	
3	
4	
5	
6	
7	
8	
9	
10	
11	

6TH OF OCTOBER CITY RAIL TRANSIT MONORAIL &
NEW CAPITAL CITY RAIL TRANSIT MONORAIL

The Authority — Hill International Authority Consultant — Main Contractor — Designer

CONTRACTOR
CONSULTANT: ENGINEERING HOUSE FOR CONSULTANCY

SCALE: AS SHOWN | SHOP DRAWING | DATE: 20.11.2024

DRAWING TITLE:
6TH OF OCTOBER MONORAIL
SHOP DRAWING FOR BRIDGE 6OL11-37
STEEL TRUSS (II).
TR3.2

REV	DATE	BY	DESCRIPTION	CHK	APD
A	20-11-24	E.SH	ISSUE FOR APPROVAL	A.SH	M.M

Project Code	Rubric	Initiator	Lot	Ref	Number	Revision
9 3 M	0 4 0 7	A A C	6 0 L 1 1	D W G	90201	A

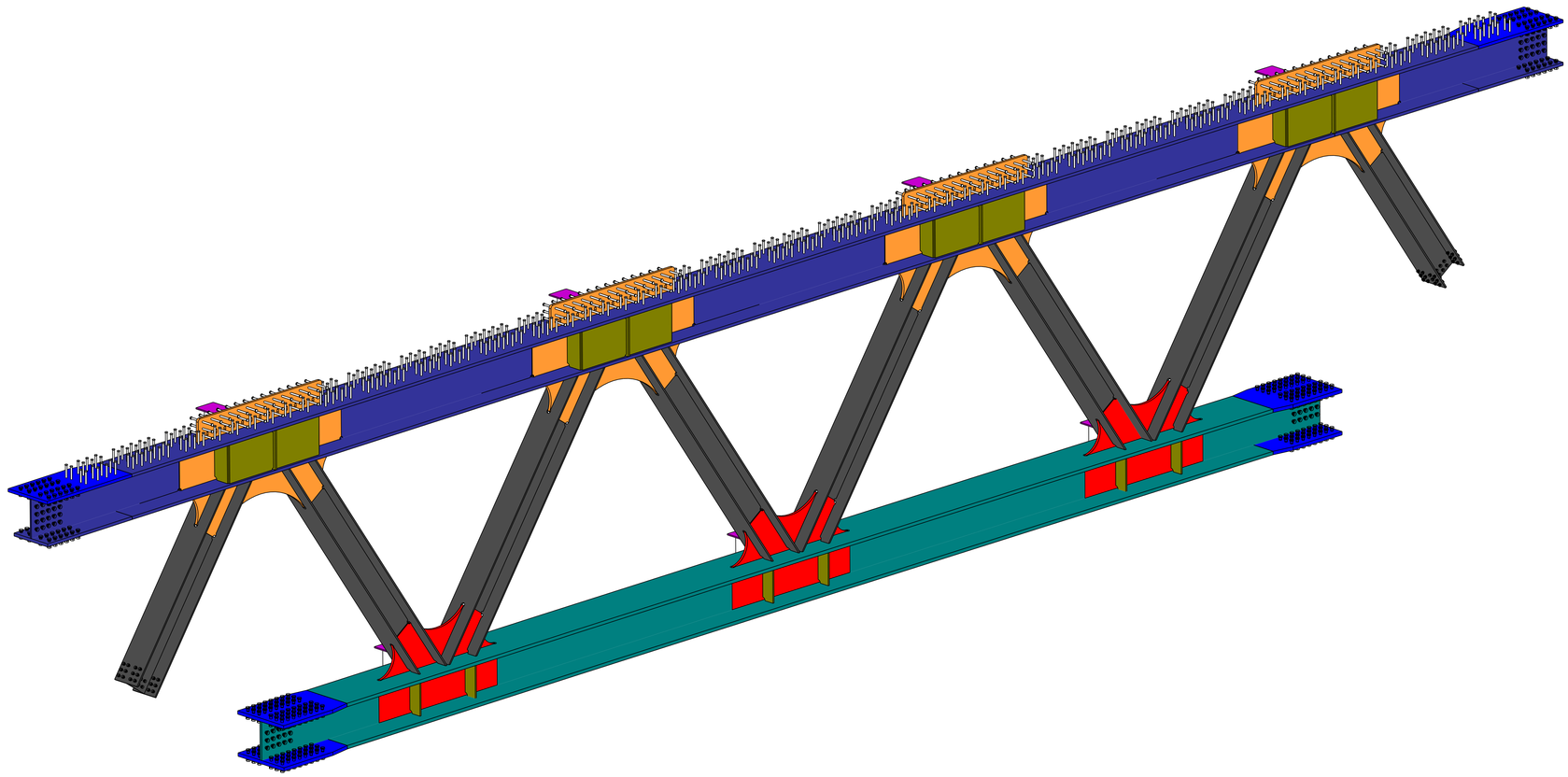

ISOMETRIC VIEW

ERECTION MARK :	TR4				QTY :	1	NOS
POS NO.	QTY PER ASSLY	SECTION	LENGTH	UNIT WEIGHT (Kg)	TOTAL QTY	TOTAL WEIGHT	GRADE
FP57	1	FLT20*400	4032	243	1	243.0	S355J2N
FP25	4	PL45*820.0	1151	328	4	1312.0	S355J2N
FP39	1	PL20*400.0	4021	242	1	242.0	S355J2N
FP43	1	PL40*600.0	2501	455	1	455.0	S355J2N
FP44	2	PL20*400.0	3036	185	2	370.0	S355J2N
FP45	2	PL20*400.0	2772	169	2	338.0	S355J2N
FP54	2	PL20*400.0	4025	243	2	486.0	S355J2N
FP55	1	PL20*400.0	4021	242	1	242.0	S355J2N
FP56	1	PL20*400.0	4021	242	1	242.0	S355J2N
FP58	1	PL20*400.0	4032	243	1	243.0	S355J2N
FP64	2	PL20*400.0	4025	243	2	486.0	S355J2N
FP65	1	PL20*400.0	4020	242	1	242.0	S355J2N
FP68	1	PL40*600.0	23420	4308	1	4308.0	S355J2N
FP69	1	PL40*600.0	20913	3824	1	3824.0	S355J2N
FP70	1	PL45*720.0	16104	4014	1	4014.0	S355K2N
FP71	1	PL45*720.0	16099	4095	1	4095.0	S355K2N
FP74	1	PL20*400.0	4032	243	1	243.0	S355J2N
FP76	1	PL20*400.0	4031	243	1	243.0	S355J2N
IS1	12	PL20*180.0	508	14	12	168.0	S355J2N
IS3	16	PL25*230.0	518	23	16	368.0	S355J2N
IS4	4	PL25*283.0	518	28	4	112.0	S355J2N
S1	696	ROD22	175	1	696	696.0	S235J2G3
W5	2	PL35*1192.0	2050	536	2	1072.0	S355J2N
W6	4	PL20*518.0	773	63	4	252.0	S355J2N
W7	4	PL20*518.0	768	62	4	248.0	S355J2N
W8	2	PL20*518.0	766	62	2	124.0	S355J2N
W9	2	PL20*519.0	780	63	2	126.0	S355J2N
W10	2	PL20*518.0	769	62	2	124.0	S355J2N
W11	2	PL20*518.0	760	62	2	124.0	S355J2N
W25	1	PL35*1192.0	2051	537	1	537.0	S355J2N
W31	3	PL15*343.0	727	28	3	84.0	S355J2N
W34	2	PL15*343.0	732	28	2	56.0	S355J2N
W37	3	PL15*343.0	732	28	3	84.0	S355J2N
WP11	2	PL12*360.0	2593	88	2	176.0	S355J2N
WP12	2	PL12*360.0	2588	87	2	174.0	S355J2N
WP13	1	PL30*510.0	4088	491	1	491.0	S355J2N
WP17	2	PL30*510.0	2039	245	2	490.0	S355J2N
WP18	2	PL20*520.0	3324	271	2	542.0	S355J2N
WP19	2	PL20*520.0	2573	210	2	420.0	S355J2N
WP21	1	PL30*510.0	4088	491	1	491.0	S355J2N
WP22	1	PL20*520.0	3327	271	1	271.0	S355J2N
WP23	2	PL12*360.0	2145	73	2	146.0	S355J2N
WP24	1	PL12*360.0	2600	88	1	88.0	S355J2N
XF2	3	PL15*602.0	700	23	3	69.0	S355J2N
XF3	3	PL15*603.0	700	23	3	69.0	S355J2N
XF5	8	PL15*670.0	700	26	8	208.0	S355J2N
XF7	2	PL10*550.0	952	40	2	80.0	S355J2N
XF8	1	PL10*550.0	952	40	1	40.0	S355J2N
XF10	1	PL10*550.0	952	40	1	40.0	S355J2N
XW2	2	PL10*570.0	945	40	2	80.0	S355J2N
XW6	1	PL10*570.0	945	40	1	40.0	S355J2N
b18	1	PL12*360.0	2600	88	1	88.0	S355J2N
pl41	2	PL40*600.0	1471	277	2	554.0	S355J2N
pl42	2	PL40*700.0	1471	317	2	634.0	S355J2N
w1	1	PL35*1614.0	2810	938	1	938.0	S355J2N
w6	2	PL35*1613.0	2810	937	2	1874.0	S355J2N
w7	1	PL35*1614.0	2810	937	1	937.0	S355J2N
				TOTAL WEIGHT :-		34743.0	

Drawing should be cancelled and sent on a different package with GA drawings & Assemblies for this truss type.

REVIEWED WITH COMMENT MONORAILS PROJECT

1 Nos. REQUIRED AS DRAWN TR4

6 October Monorail Engineering Unit Valid For Construction

GENERAL NOTES:

1. ALL DIMENSIONS ARE IN MILLIMETERS UNLESS OTHERWISE SPECIFIED.
2. LEVELS ARE IN METERS
3. DESIGN SERVICE LIFE OF 100 YEARS.
4. FLANGES OF TOP AND BOTTOM CHORDS TO BE SUPPLIED WITH IMPROVED THROUGH THICKNESS PROPERTIES Z25 ACCORDING TO EN10164.

REFERENCE DRAWINGS

1	93M-0407-SEN-6OL11-END-10118-B PAGE 01:17
2	
3	
4	
5	
6	
7	
8	
9	
10	
11	

6TH OF OCTOBER CITY RAIL TRANSIT MONORAIL & NEW CAPITAL CITY RAIL TRANSIT MONORAIL

The Authority — Hill International Authority Consultant — ORASCOM CONSTRUCTION — BOMBARDIER — Main Contractor — SENER — SHAKER CONSULTANCY GROUP — Designer

CONTRACTOR CONSULTANT: ENGINEERING HOUSE FOR CONSULTANCY

SCALE: AS SHOWN | SHOP DRAWING | DATE: 20.11.2024

DRAWING TITLE:
6TH OF OCTOBER MONORAIL
SHOP DRAWING FOR BRIDGE 6OL11-37
STEEL TRUSS (II):
TR4.1

REV	DATE	BY	DESCRIPTION	CHK	APD
A	20-11-24	E.SH	ISSUE FOR APPROVAL	A.SH	M.M

Project Code	Rubric	Initiator	Lot	Ref	Number	Revision
9 3 M	0 4 0 7	A A C	6 0 L 1 1	D W G	90202	A

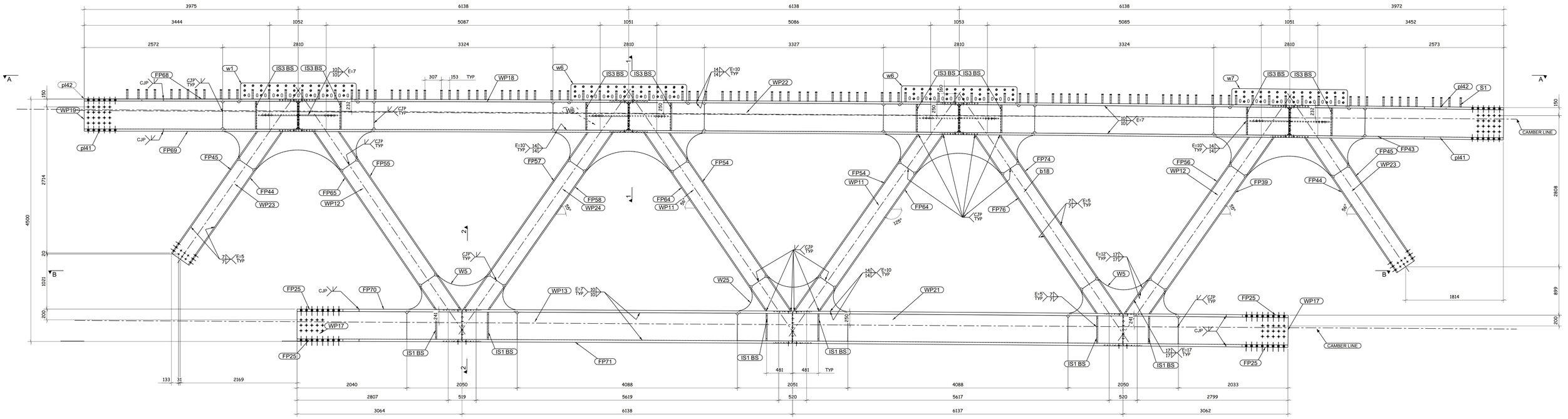

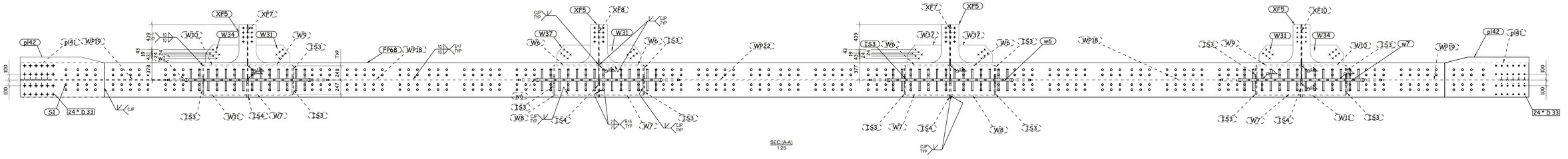

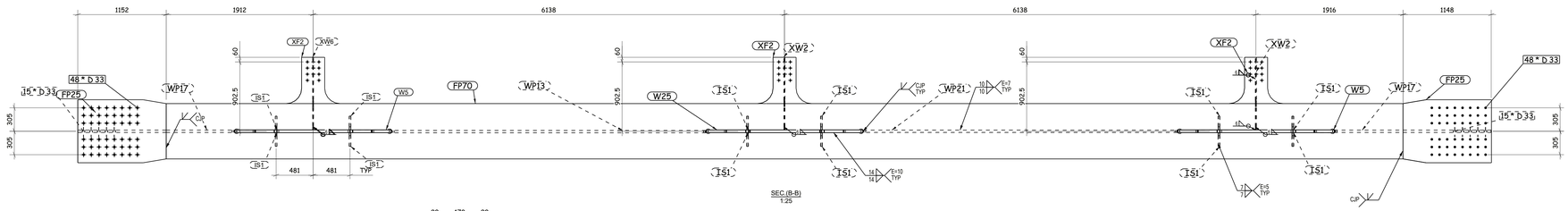

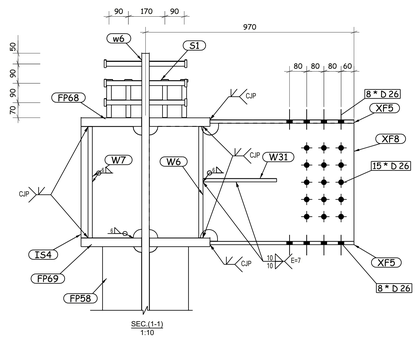

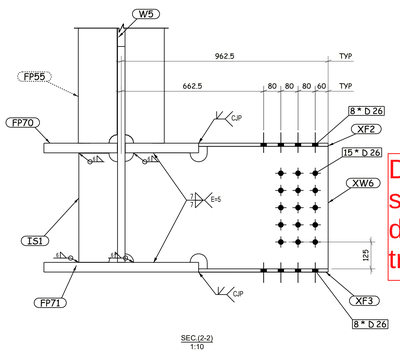

1 Nos. REQUIRED AS DRAWN TR4

Drawing should be cancelled and sent on a different package with GA drawings & Assemblies for this truss type.

REVIEWED WITH COMMENT
MONORAILS PROJECT

GENERAL NOTES:

1. ALL DIMENSIONS ARE IN MILLIMETERS UNLESS OTHERWISE SPECIFIED.
2. LEVELS ARE IN METERS
3. DESIGN SERVICE LIFE OF 100 YEARS.
4. FLANGES OF TOP AND BOTTOM CHORDS TO BE SUPPLIED WITH IMPROVED THROUGH THICKNESS PROPERTIES Z25 ACCORDING TO EN10164.

REFERENCE DRAWINGS

1	93M-0407-SEN-6OL11-END-10118-B PAGE 01:17
2	
3	
4	
5	
6	
7	
8	
9	
10	
11	

6TH OF OCTOBER CITY RAIL TRANSIT MONORAIL &
NEW CAPITAL CITY RAIL TRANSIT MONORAIL

The Authority — Hill International — Authority Consultant

Main Contractor

Designer

CONTRACTOR CONSULTANT:

ENGINEERING HOUSE FOR CONSULTANCY

SCALE	SHOPDRAWING	DATE
AS SHOWN		20.11.2024

REV	DATE	BY	DESCRIPTION	CHK	APD
A	20-11-24	E.SH	ISSUE FOR APPROVAL	A.SH	M.M

DRAWING TITLE:
6TH OF OCTOBER MONORAIL
SHOP DRAWING FOR BRIDGE 6OL11-37
STEEL TRUSS (II).
TR4.2

Project Code	Rubric	Initiator	Lot	Ref	Number	Revision
93M	0407	AAC	60L11	DWG	90203	A

ERECTION MARK :	XG1					QTY : 10 NOS	
POS NO.	QTY PER ASSLY	SECTION	LENGTH	UNIT WEIGHT (Kg)	TOTAL QTY	TOTAL WEIGHT	GRADE
XW3	1	PL10*550	2840	123	10	1226.0	S355J2N
XF6	2	PL15*300.0	2840	100	20	2006.0	S355J2N
				TOTAL WEIGHT :-		3232.0	

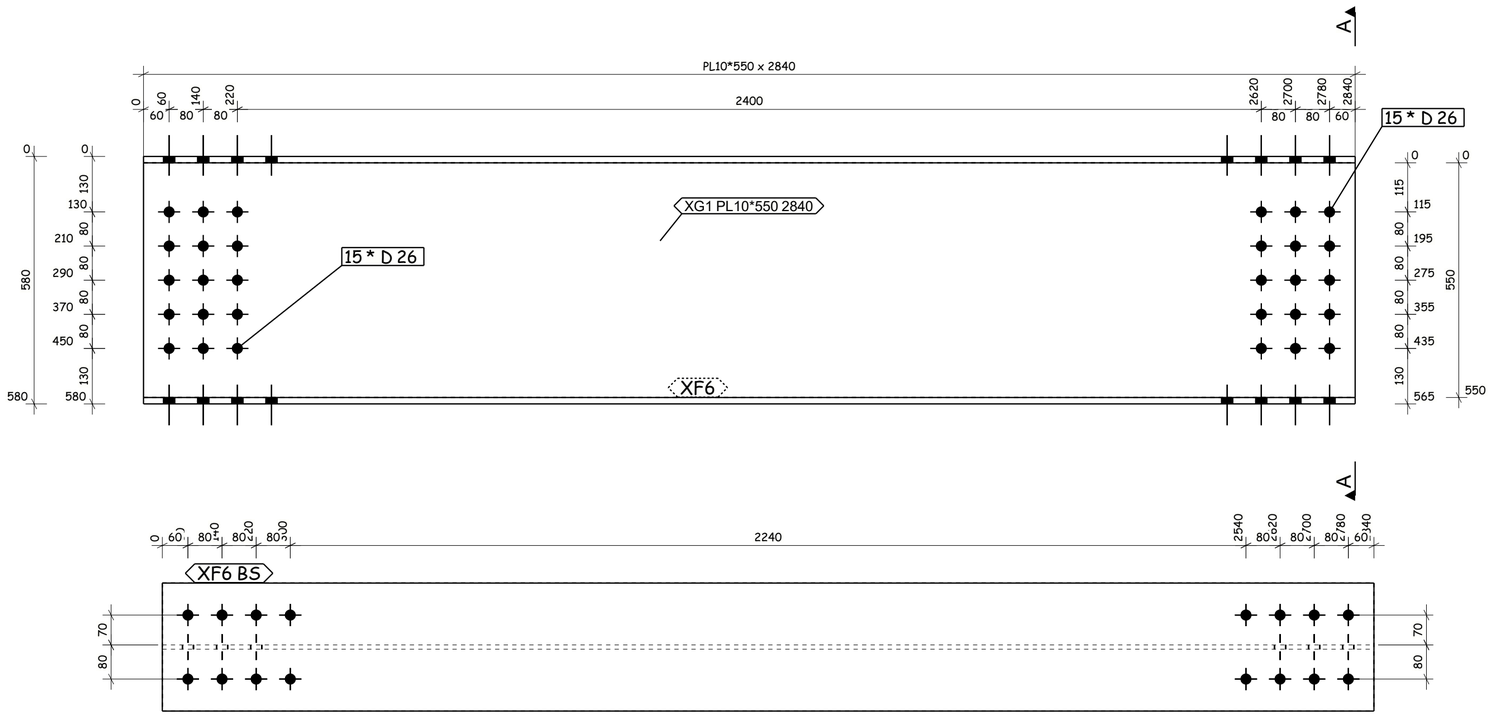

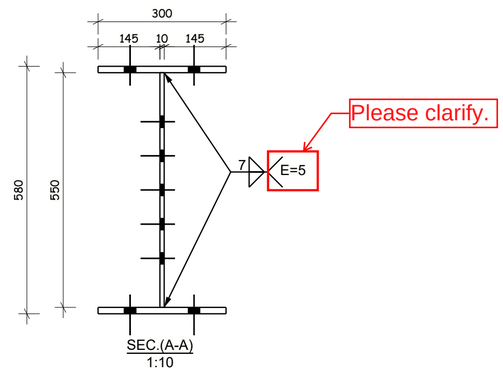

Drawing should be cancelled and sent on a different package with GA drawings & Assemblies for this truss type.

REVIEWED WITH COMMENT MONORAILS PROJECT

10 Nos. REQUIRED AS DRAWN XG1

6 October Monorail Engineering Unit Valid For Construction

GENERAL NOTES:

1. ALL DIMENSIONS ARE IN MILLIMETERS UNLESS OTHERWISE SPECIFIED.
2. LEVELS ARE IN METERS
3. DESIGN SERVICE LIFE OF 100 YEARS.
4. FLANGES OF TOP AND BOTTOM CHORDS TO BE SUPPLIED WITH IMPROVED THROUGH THICKNESS PROPERTIES Z25 ACCORDING TO EN10164.

REFERENCE DRAWINGS

1	93M-0407-SEN-6OL11-END-10118-B PAGE 01:17
2	
3	
4	
5	
6	
7	
8	
9	
10	
11	

6TH OF OCTOBER CITY RAIL TRANSIT MONORAIL & NEW CAPITAL CITY RAIL TRANSIT MONORAIL

The Authority — Hill International Authority Consultant — Main Contractor: ORASCOM CONSTRUCTION — BOMBARDIER — Designer: SENER, SHAKER CONSULTANCY GROUP

CONTRACTOR
CONSULTANT: ENGINEERING HOUSE FOR CONSULTANCY

SCALE	SHOP DRAWING	DATE
AS SHOWN		20.11.2024

REV	DATE	BY	DESCRIPTION	CHK	APD
A	20-11-24	E.SH	ISSUE FOR APPROVAL	A.SH	M.M

DRAWING TITLE:
6TH OF OCTOBER MONORAIL
SHOP DRAWING FOR BRIDGE 6OL11-37
STEEL TRUSS (II).
X.G.1

Project Code	Rubric	Initiator	Lot	Ref	Number	Revision
9 3 M	0 4 0 7	A A C	6 0 L 1 1	D W G	90204	A

Tekla structures

Same comments as 93M-0407-ACC-60L11-DWG-90204-A.

REVIEWED WITH COMMENT
MONORAILS PROJECT

ERECTION MARK : XG2							QTY : 11 NOS
POS NO.	QTY PER ASSLY	SECTION	LENGTH	UNIT WEIGHT (Kg)	TOTAL QTY	TOTAL WEIGHT	GRADE
XF9	1	FLT15*300	2855	101	11	1109.0	S355J2N
XF9	1	PL15*300.0	2855	101	11	1109.0	S355J2N
XW4	1	PL10*570.0	2855	128	11	1405.0	S355J2N
				TOTAL WEIGHT :-		3623.0	

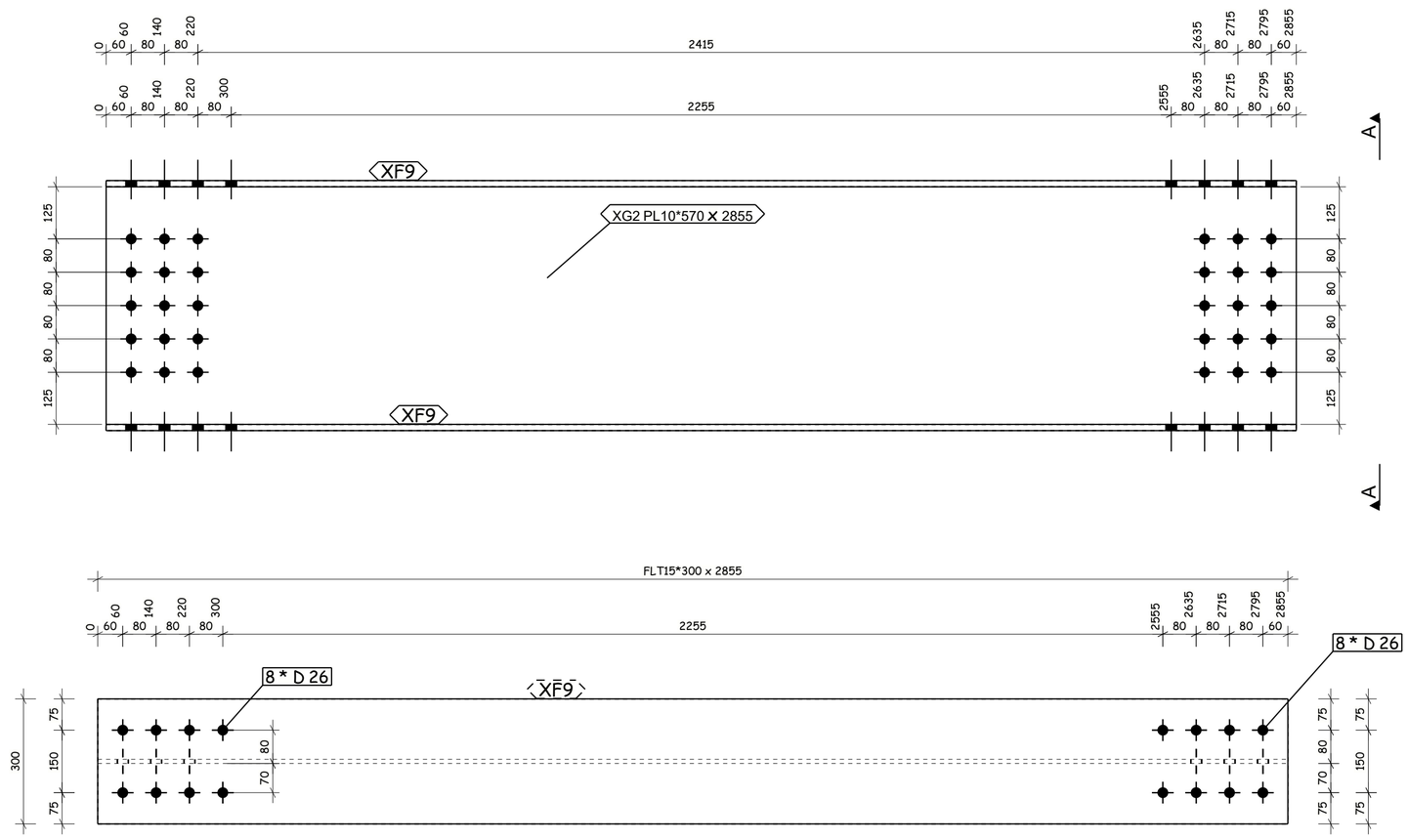

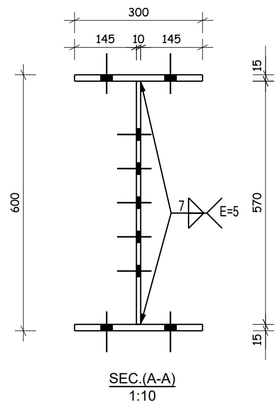

SEC.(A-A)
1:10

11 Nos. REQUIRED AS DRAWN XG2

GENERAL NOTES:

1. ALL DIMENSIONS ARE IN MILLIMETERS UNLESS OTHERWISE SPECIFIED.
2. LEVELS ARE IN METERS
3. DESIGN SERVICE LIFE OF 100 YEARS.
4. FLANGES OF TOP AND BOTTOM CHORDS TO BE SUPPLIED WITH IMPROVED THROUGH THICKNESS PROPERTIES Z25 ACCORDING TO EN10164.

REFERENCE DRAWINGS	
1	93M-0407-SEN-6OL11-END-10118-B PAGE 01:17
2	
3	
4	
5	
6	
7	
8	
9	
10	
11	

6TH OF OCTOBER CITY RAIL TRANSIT MONORAIL &
NEW CAPITAL CITY RAIL TRANSIT MONORAIL

The Authority — Hill International Authority Consultant — ORASCOM CONSTRUCTION — BOMBARDIER — Main Contractor — SENER — SHAKER CONSULTANCY GROUP — Designer

CONTRACTOR
CONSULTANT:
ENGINEERING HOUSE FOR CONSULTANCY

6 October Monorail
Engineering Unit
Valid For Construction

SCALE	SHOP DRAWING	DATE
NOT SHOWN		20.11.2024

REV	DATE	BY	DESCRIPTION	CHK	APD
A	20-11-24	E.SH	ISSUE FOR APPROVAL	A.SH	M.M

DRAWING TITLE:
6TH OF OCTOBER MONORAIL
SHOP DRAWING FOR BRIDGE 6OL11-37
STEEL TRUSS (II).
X.G.2

Project Code	Rubric	Initiator	Lot	Ref	Number	Revision
93M	0407	AAC	60L11	DWG	90205	A

Tekla structures

Same comments as 93M-0407-ACC-60L11-DWG-90204-A.

REVIEWED WITH COMMENT
MONORAILS PROJECT

ERECTION MARK :	BR1					QTY : 9 NOS	
POS NO.	QTY PER ASSLY	SECTION	LENGTH	UNIT WEIGHT (Kg)	TOTAL QTY	TOTAL WEIGHT	GRADE
L1	1	1/2IPE330	6557	160	9	1442.0	S355J0N
L2	1	1/2IPE330	6557	160	9	1442.0	S355J0N
W32	1	PL15*198.0	253	5	9	43.0	S355J2N
				TOTAL WEIGHT :-		2927.0	

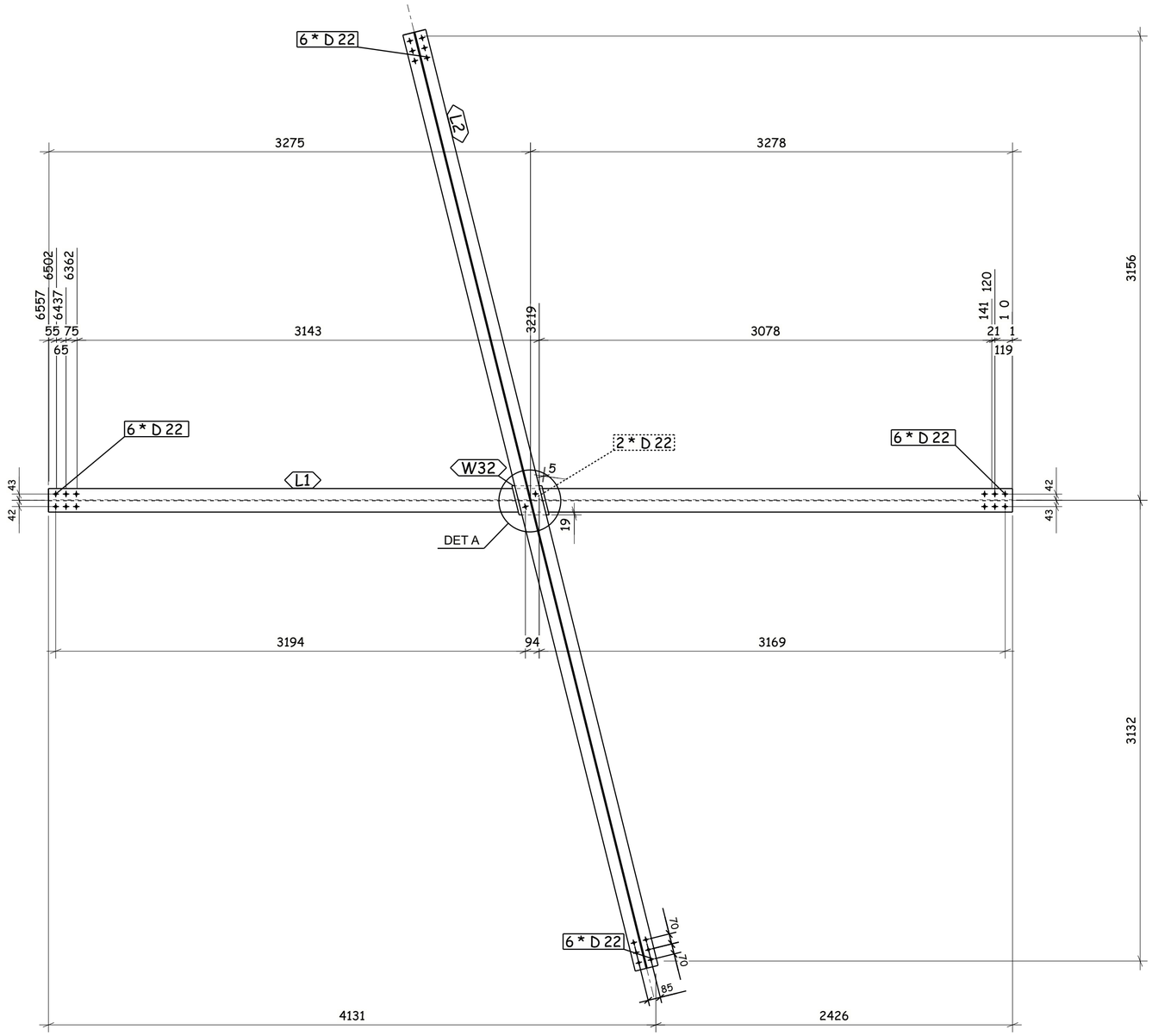

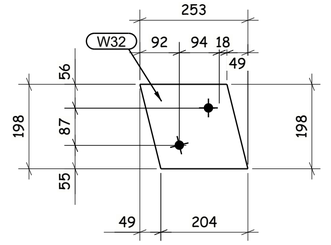

DETAIL A

9 Nos. REQUIRED AS DRAWN BR1

6 October Monorail
Engineering Unit
Valid For Construction

GENERAL NOTES:

1. ALL DIMENSIONS ARE IN MILLIMETERS UNLESS OTHERWISE SPECIFIED.
2. LEVELS ARE IN METERS
3. DESIGN SERVICE LIFE OF 100 YEARS.
4. FLANGES OF TOP AND BOTTOM CHORDS TO BE SUPPLIED WITH IMPROVED THROUGH THICKNESS PROPERTIES Z25 ACCORDING TO EN10164.

REFERENCE DRAWINGS

1	93M-0407-SEN-6OL11-END-10118-B PAGE 01:17
2	
3	
4	
5	
6	
7	
8	
9	
10	
11	

6TH OF OCTOBER CITY RAIL TRANSIT MONORAIL &
NEW CAPITAL CITY RAIL TRANSIT MONORAIL

The Authority — Hill International Authority Consultant

Main Contractor

Designer

CONTRACTOR
CONSULTANT: ENGINEERING HOUSE FOR CONSULTANCY

SCALE: AS SHOWN | SHOP DRAWING | DATE: 20.11.2024

REV	DATE	BY	DESCRIPTION	CHK	APD
A	20-11-24	E.SH	ISSUE FOR APPROVAL	A.SH	M.M

DRAWING TITLE:
6TH OF OCTOBER MONORAIL
SHOP DRAWING FOR BRIDGE 6OL11-37
STEEL TRUSS (II).
BR.1

Project Code	Rubric	Initiator	Lot	Ref	Number	Revision
93M	0407	AAC	60L11	DWG	90206	A

Tekla structures

Same comments as 93M-0407-ACC-60L11-DWG-90204-A.

REVIEWED WITH COMMENT MONORAILS PROJECT

ERECTION MARK : BR2							QTY : 2 NOS
POS NO.	QTY PER ASSLY	SECTION	LENGTH	UNIT WEIGHT (Kg)	TOTAL QTY	TOTAL WEIGHT	GRADE
L3	1	1/2IPE330	6602	161	2	323.0	S355J0N
L4	1	1/2IPE330	6598	161	2	322.0	S355J0N
p2	1	PL10*197.0	254	3	2	6.0	S355J2N
				TOTAL WEIGHT :-		651.0	

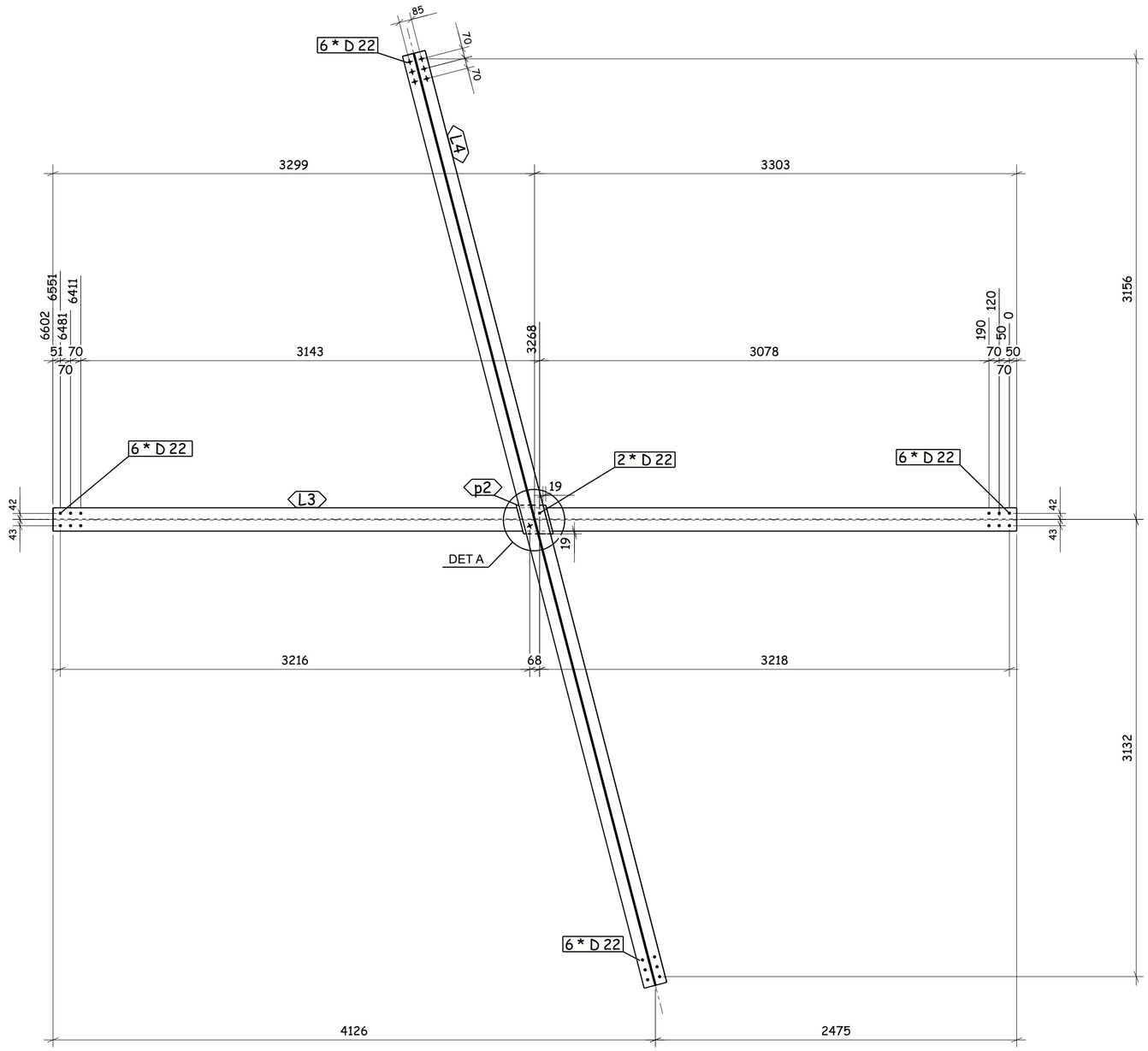

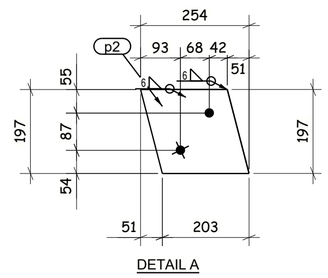

DETAIL A

2 Nos. REQUIRED AS DRAWN BR2

GENERAL NOTES:

1. ALL DIMENSIONS ARE IN MILLIMETERS UNLESS OTHERWISE SPECIFIED.
2. LEVELS ARE IN METERS
3. DESIGN SERVICE LIFE OF 100 YEARS.
4. FLANGES OF TOP AND BOTTOM CHORDS TO BE SUPPLIED WITH IMPROVED THROUGH THICKNESS PROPERTIES Z25 ACCORDING TO EN10164.

REFERENCE DRAWINGS

1	93M-0407-SEN-6OL11-END-10118-B PAGE 01:17
2	
3	
4	
5	
6	
7	
8	
9	
10	
11	

6TH OF OCTOBER CITY RAIL TRANSIT MONORAIL & NEW CAPITAL CITY RAIL TRANSIT MONORAIL

The Authority — Hill International — Authority Consultant

Main Contractor

Designer

CONTRACTOR CONSULTANT:

ENGINEERING HOUSE FOR CONSULTANCY

REV	DATE	BY	DESCRIPTION	CHK	APD
A	20-11-24	E.SH	ISSUE FOR APPROVAL	A.SH	M.M

SCALE AS SHOWN | SHOPDRAWING | DATE 20.11.2024

6 October Monorail — Engineering Unit — Valid For Construction

DRAWING TITLE:
6TH OF OCTOBER MONORAIL
SHOP DRAWING FOR BRIDGE 6OL11-37
STEEL TRUSS (II).
BR.2

Project Code	Rubric	Initiator	Lot	Ref	Number	Revision
93M	0407	AAC	60L11	DWG	90207	A

Tekla structures

Same comments as 93M-0407-ACC-60L11-DWG-90204-A.

REVIEWED WITH COMMENT
MONORAILS PROJECT

ERECTION MARK :	LP3					QTY : 1 NOS	
POS NO.	QTY PER ASSLY	SECTION	LENGTH	UNIT WEIGHT (Kg)	TOTAL QTY	TOTAL WEIGHT	GRADE
LP1	1	PL35*710	1710	334	1	334.0	S355J2N
LP1	1	PL35*710.0	1710	334	1	334.0	S355J2N
LP2	4	PL35*300.0	1710	141	4	564.0	S355J2N
LP3	2	PL20*350.0	1110	61	2	122.0	S355J2N
				TOTAL WEIGHT :-		1354.0	

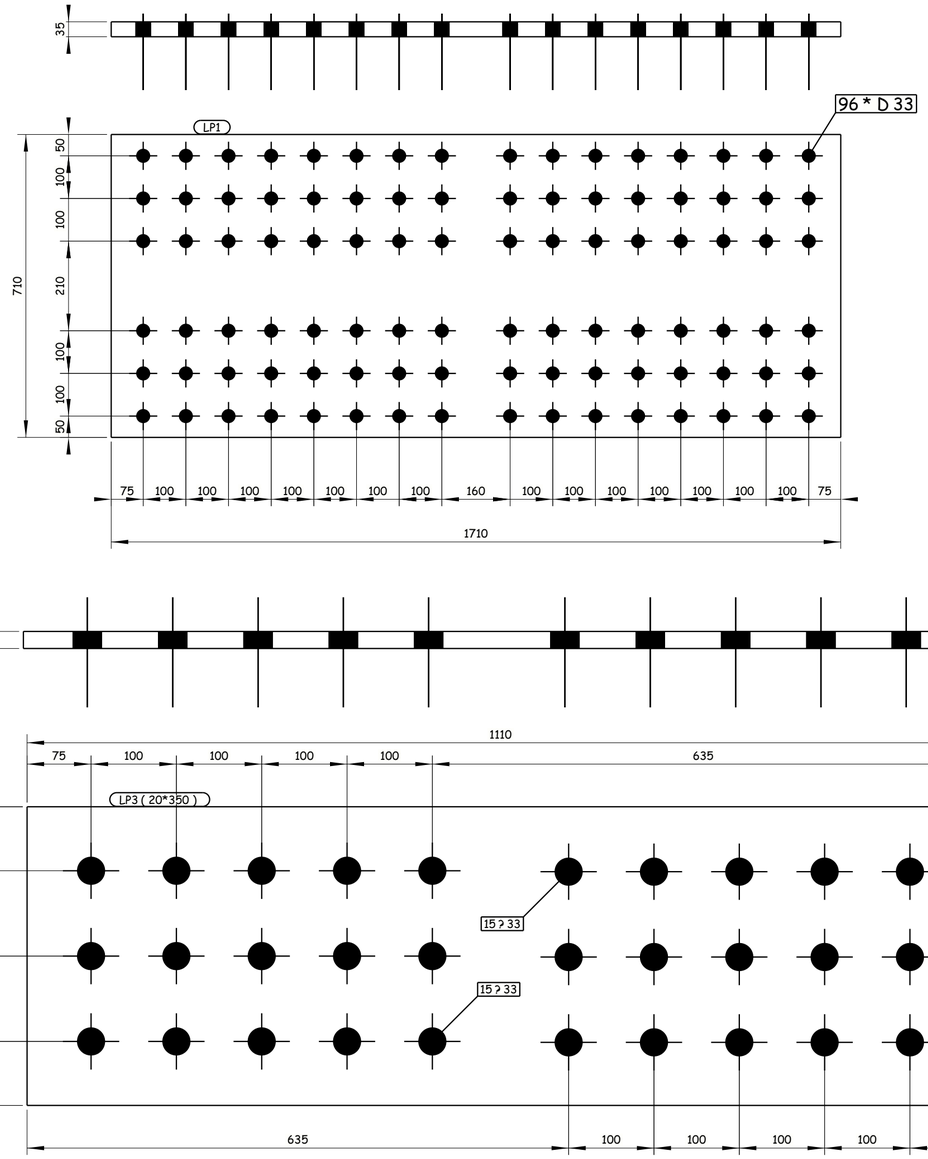

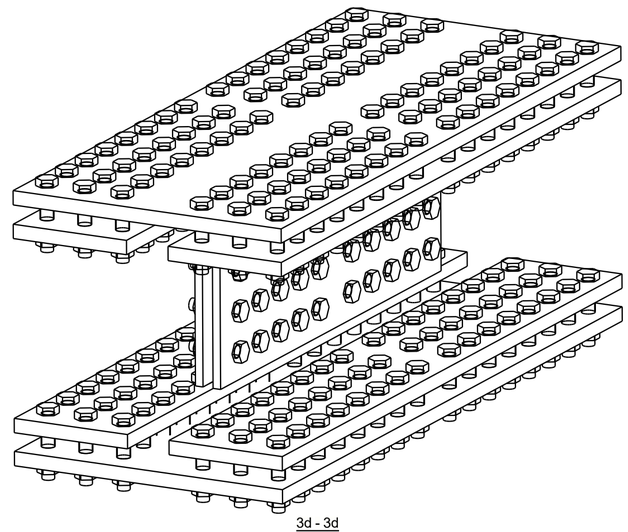

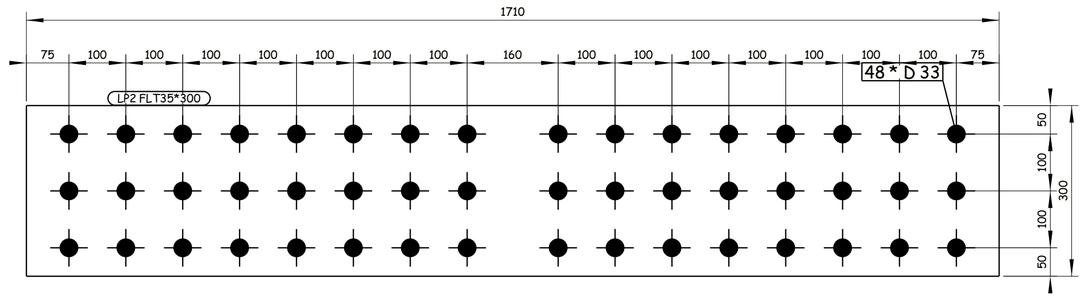

1 Nos. REQUIRED AS DRAWN LP3

GENERAL NOTES:

1. ALL DIMENSIONS ARE IN MILLIMETERS UNLESS OTHERWISE SPECIFIED.
2. LEVELS ARE IN METERS
3. DESIGN SERVICE LIFE OF 100 YEARS.
4. FLANGES OF TOP AND BOTTOM CHORDS TO BE SUPPLIED WITH IMPROVED THROUGH THICKNESS PROPERTIES Z25 ACCORDING TO EN10164.

REFERENCE DRAWINGS	
1	93M-0407-SEN-6OL11-END-10118-B PAGE 01:17
2	
3	
4	
5	
6	
7	
8	
9	
10	
11	

6TH OF OCTOBER CITY RAIL TRANSIT MONORAIL &
NEW CAPITAL CITY RAIL TRANSIT MONORAIL

The Authority — Hill International Authority Consultant — ORASCOM CONSTRUCTION — BOMBARDIER Main Contractor — SENER SHAKER CONSULTANCY GROUP Designer

CONTRACTOR CONSULTANT: ENGINEERING HOUSE FOR CONSULTANCY

6 October Monorail Engineering Unit
Valid For Construction

SCALE	SHOP DRAWING	DATE
NOT SHOWN		20.11.2024

REV	DATE	BY	DESCRIPTION	CHK	APD
A	20-11-24	E.SH	ISSUE FOR APPROVAL	A.SH	M.M

DRAWING TITLE:
6TH OF OCTOBER MONORAIL
SHOP DRAWING FOR BRIDGE 6OL11-37
STEEL TRUSS (II).
SPLICE CONNECTION.1

Project Code	Rubric	Initiator	Lot	Ref	Number	Revision
9 3 M	0 4 0 7	A A C	6 0 L 1 1	D W G	90208	A

Tekla structures

Same comments as 93M-0407-ACC-60L11-DWG-90204-A.

REVIEWED WITH COMMENT MONORAILS PROJECT

ERECTION MARK :	LP7				QTY :	1	NOS
POS NO.	QTY PER ASSLY	SECTION	LENGTH	UNIT WEIGHT (Kg)	TOTAL QTY	TOTAL WEIGHT	GRADE
LP4	1	PL20*600	1310	123	1	123.0	S355J2N
LP4	1	PL19*600.0	1310	123	1	123.0	S355J2N
LP5	4	PL20*250.0	1310	51	4	204.0	S355J2N
LP6	1	PL20*450.0	1110	78	1	78.0	S355J2N
LP7	1	PL20*450.0	1110	78	1	78.0	S355J2N
S1	18	ROD22	175	1	18	18.0	S235J2G3
				TOTAL WEIGHT :-		624.0	

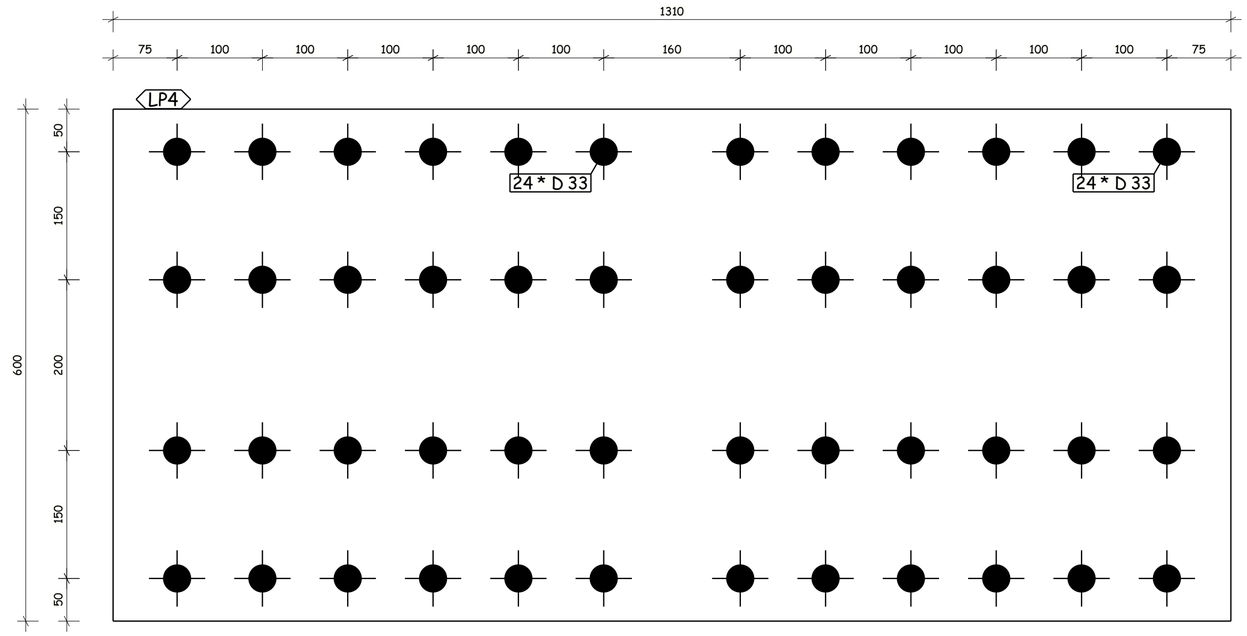

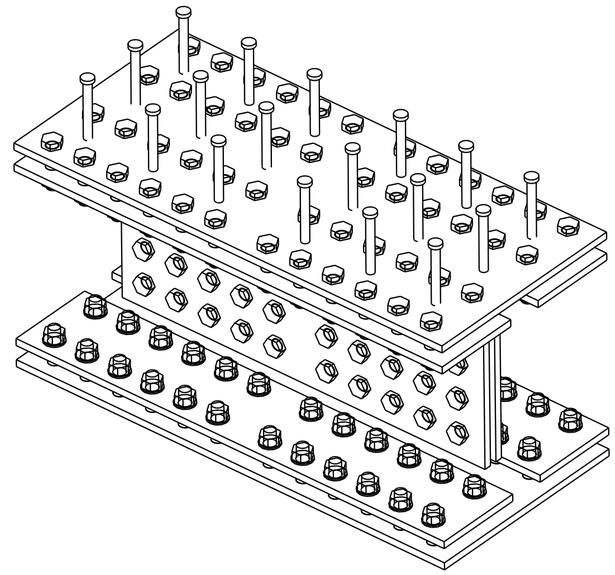

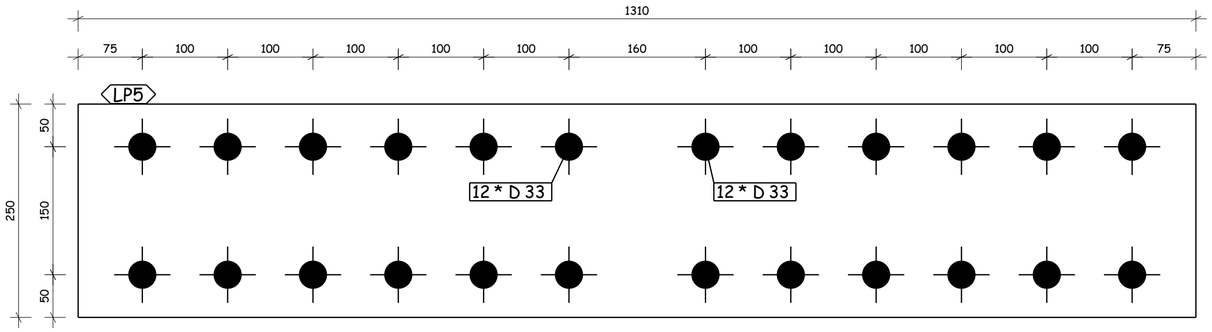

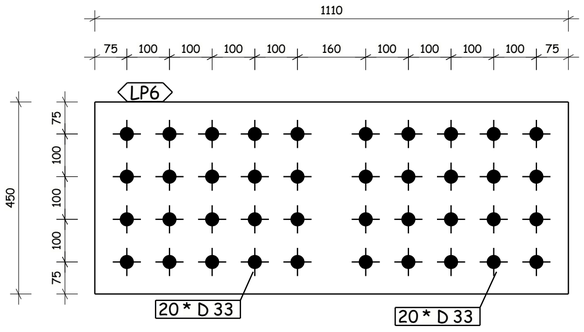

1 Nos. REQUIRED AS DRAWN LP7

GENERAL NOTES:

1. ALL DIMENSIONS ARE IN MILLIMETERS UNLESS OTHERWISE SPECIFIED.
2. LEVELS ARE IN METERS
3. DESIGN SERVICE LIFE OF 100 YEARS.
4. FLANGES OF TOP AND BOTTOM CHORDS TO BE SUPPLIED WITH IMPROVED THROUGH THICKNESS PROPERTIES Z25 ACCORDING TO EN10164.

REFERENCE DRAWINGS

1	93M-0407-SEN-6OL11-END-10118-B PAGE 01:17
2	
3	
4	
5	
6	
7	
8	
9	
10	
11	

6TH OF OCTOBER CITY RAIL TRANSIT MONORAIL & NEW CAPITAL CITY RAIL TRANSIT MONORAIL

The Authority — Hill International Authority Consultant — ORASCOM CONSTRUCTION — BOMBARDIER Main Contractor — SENER SHAKER Designer

CONTRACTOR CONSULTANT: ENGINEERING HOUSE FOR CONSULTANCY

6 October Monorail Engineering Unit Valid For Construction

REV	DATE	BY	DESCRIPTION	CHK	APD
A	20-11-24	E.SH	ISSUE FOR APPROVAL	A.SH	M.M

SCALE AS SHOWN | SHOP DRAWING | DATE 20.11.2024

DRAWING TITLE:
6TH OF OCTOBER MONORAIL
SHOP DRAWING FOR BRIDGE 6OL11-37
STEEL TRUSS (II).
SPLICE CONNECTION.2

Project Code	Rubric	Initiator	Lot	Ref	Number	Revision
9 3 M	0 4 0 7	A A C	6 0 L 1 1	D W G	90209	A

Tekla structures

Same comments as 93M-0407-ACC-60L11-DWG-90204-A.

REVIEWED WITH COMMENT MONORAILS PROJECT

ERECTION MARK : LP15							QTY : 1 NOS
POS NO.	QTY PER ASSLY	SECTION	LENGTH	UNIT WEIGHT (Kg)	TOTAL QTY	TOTAL WEIGHT	GRADE
LP11	1	PL15*370	570	25	1	25.0	S355J2N
LP11	1	PL15*370.0	570	25	1	25.0	S355J2N
LP12	4	PL15*160.0	570	11	4	44.0	S355J2N
LP13	2	PL10*280.0	410	9	2	18.0	S355J2N
				TOTAL WEIGHT :-		112.0	

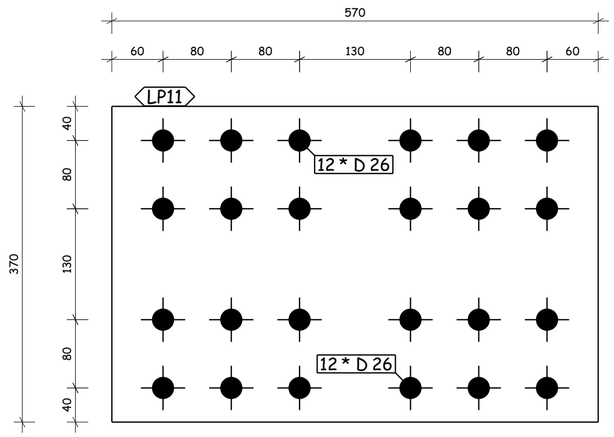

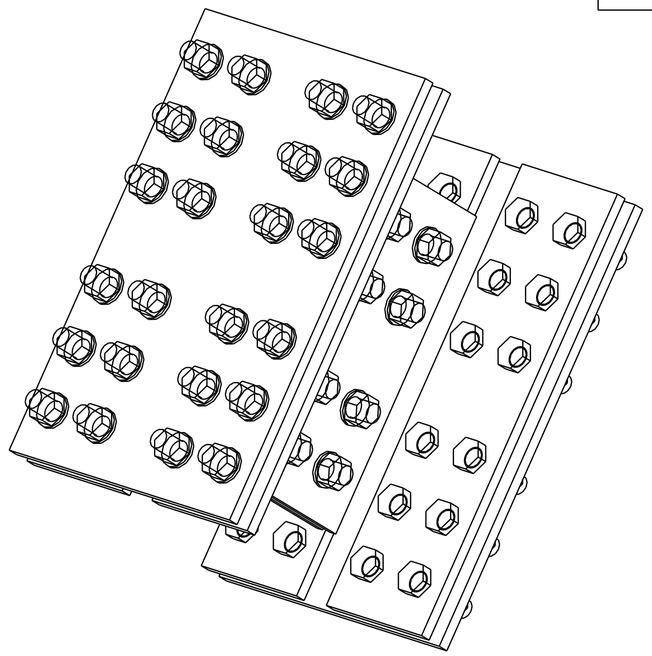

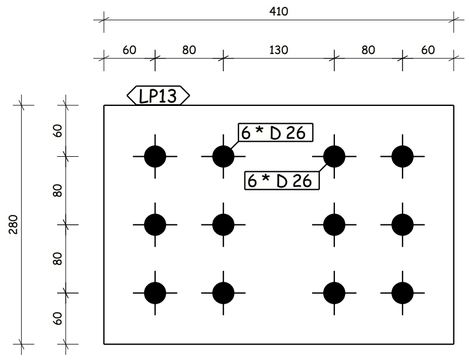

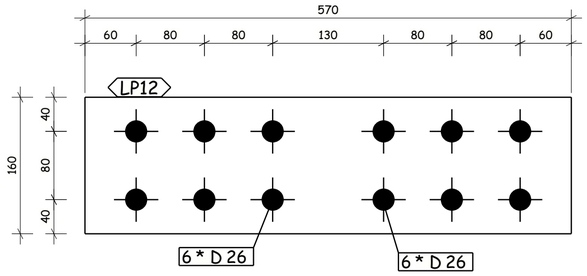

1 Nos. REQUIRED AS DRAWN LP15

GENERAL NOTES:

1. ALL DIMENSIONS ARE IN MILLIMETERS UNLESS OTHERWISE SPECIFIED.
2. LEVELS ARE IN METERS
3. DESIGN SERVICE LIFE OF 100 YEARS.
4. FLANGES OF TOP AND BOTTOM CHORDS TO BE SUPPLIED WITH IMPROVED THROUGH THICKNESS PROPERTIES Z25 ACCORDING TO EN10164.

REFERENCE DRAWINGS

1	93M-0407-SEN-6OL11-END-10118-B PAGE 01:17
2	
3	
4	
5	
6	
7	
8	
9	
10	
11	

6TH OF OCTOBER CITY RAIL TRANSIT MONORAIL & NEW CAPITAL CITY RAIL TRANSIT MONORAIL

The Authority — Hill International Authority Consultant — ORASCOM CONSTRUCTION — BOMBARDIER Main Contractor — SENER SHAKER CONSULTANCY GROUP Designer

CONTRACTOR CONSULTANT: ENGINEERING HOUSE FOR CONSULTANCY

6 October Monorail Engineering Unit Valid For Construction

SCALE	SHOP DRAWING	DATE
AS SHOWN		20.11.2024

REV	DATE	BY	DESCRIPTION	CHK	APD
A	20-11-24	E.SH	ISSUE FOR APPROVAL	A.SH	M.M

DRAWING TITLE:
6TH OF OCTOBER MONORAIL
SHOP DRAWING FOR BRIDGE 6OL11-37
STEEL TRUSS (II).
SPLICE CONNECTION.3

Project Code	Rubric	Initiator	Lot	Ref	Number	Revision
93M	0407	AAC	60L11	DWG	90210	A

Tekla structures

Same comments as 93M-0407-ACC-60L11-DWG-90204-A.

REVIEWED WITH COMMENT
MONORAILS PROJECT

ERECTION MARK :	LP23					QTY :	1	NOS
POS NO.	QTY PER ASSLY	SECTION	LENGTH	UNIT WEIGHT (Kg)	TOTAL QTY	TOTAL WEIGHT	GRADE	
LP8	1	PL15*240	730	21	1	21.0	S355J2N	
LP8	1	PL15*240.0	730	21	1	21.0	S355J2N	
LP9	4	PL15*90.0	730	8	4	32.0	S355J2N	
LP10	2	PL10*440.0	570	20	2	40.0	S355J2N	
				TOTAL WEIGHT :-		114.0		

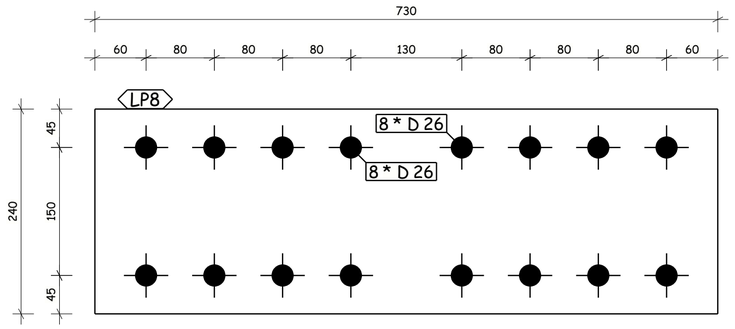

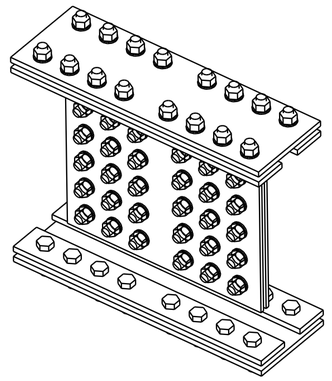

3d - 3d
1:10

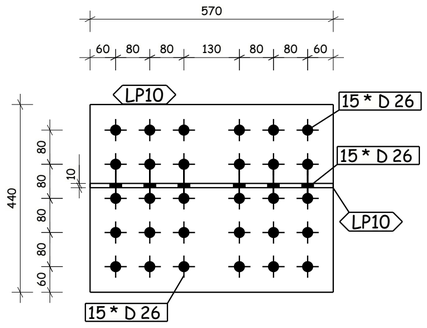

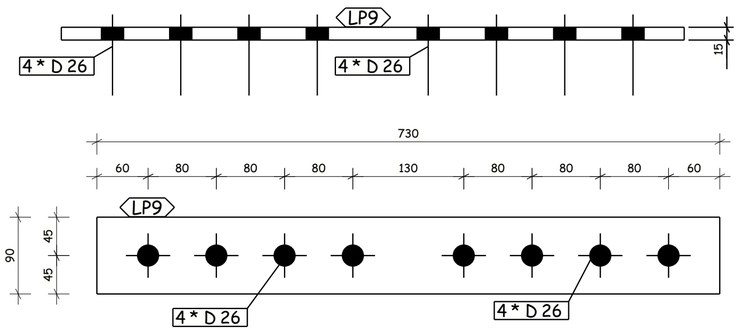

1 Nos. REQUIRED AS DRAWN LP23

6 October: Monorail
Engineering Unit
Valid For Construction

GENERAL NOTES:

1. ALL DIMENSIONS ARE IN MILLIMETERS UNLESS OTHERWISE SPECIFIED.
2. LEVELS ARE IN METERS
3. DESIGN SERVICE LIFE OF 100 YEARS.
4. FLANGES OF TOP AND BOTTOM CHORDS TO BE SUPPLIED WITH IMPROVED THROUGH THICKNESS PROPERTIES Z25 ACCORDING TO EN10164.

REFERENCE DRAWINGS

1	93M-0407-SEN-6OL11-END-10118-B PAGE 01:17
2	
3	
4	
5	
6	
7	
8	
9	
10	
11	

6TH OF OCTOBER CITY RAIL TRANSIT MONORAIL &
NEW CAPITAL CITY RAIL TRANSIT MONORAIL

The Authority — Hill International Authority Consultant — ORASCOM CONSTRUCTION — BOMBARDIER — Main Contractor — SENER — SHAKER CONSULTANCY GROUP — Designer

CONTRACTOR CONSULTANT: ENGINEERING HOUSE FOR CONSULTANCY

SCALE	SHOP DRAWING	DATE
AS SHOWN		20.11.2024

REV	DATE	BY	DESCRIPTION	CHK	APD
A	20-11-24	E.SH	ISSUE FOR APPROVAL	A.SH	M.M

DRAWING TITLE:
6TH OF OCTOBER MONORAIL
SHOP DRAWING FOR BRIDGE 6OL11-37
STEEL TRUSS (II).
SPLICE CONNECTION.4

Project Code	Rubric	Initiator	Lot	Ref	Number	Revision
93M	0407	AAC	60L11	DWG	90211	A

Tekla structures

Same comments as 93M-0407-ACC-60L11-DWG-90204-A.

REVIEWED WITH COMMENT
MONORAILS PROJECT

ERECTION MARK :	LP24				QTY :	1	NOS
POS NO.	QTY PER ASSLY	SECTION	LENGTH	UNIT WEIGHT (Kg)	TOTAL QTY	TOTAL WEIGHT	GRADE
LP8	1	PL15*240	730	21	1	21.0	S355J2N
LP8	1	PL15*240.0	730	21	1	21.0	S355J2N
LP9	4	PL15*90.0	730	8	4	32.0	S355J2N
LP10	2	PL10*440.0	570	20	2	40.0	S355J2N
				TOTAL WEIGHT :-		114.0	

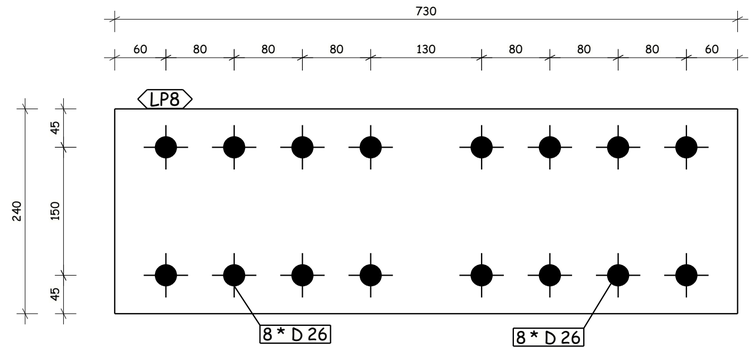

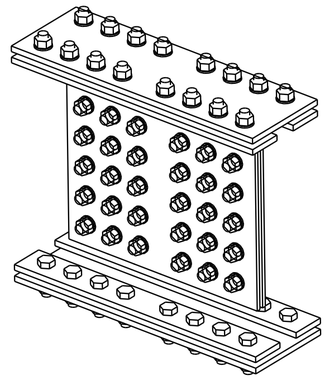

3d - 3d
1:10

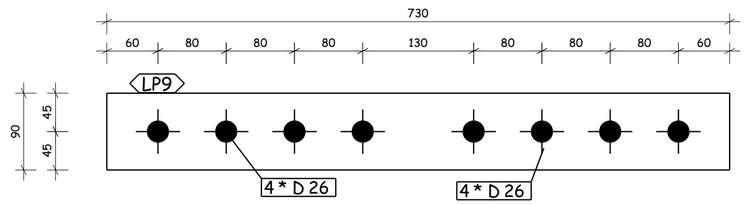

1 Nos. REQUIRED AS DRAWN LP24

6 October: Monorail
Engineering Unit
Valid For Construction

GENERAL NOTES:

1. ALL DIMENSIONS ARE IN MILLIMETERS UNLESS OTHERWISE SPECIFIED.
2. LEVELS ARE IN METERS
3. DESIGN SERVICE LIFE OF 100 YEARS.
4. FLANGES OF TOP AND BOTTOM CHORDS TO BE SUPPLIED WITH IMPROVED THROUGH THICKNESS PROPERTIES Z25 ACCORDING TO EN10164.

REFERENCE DRAWINGS

1	93M-0407-SEN-6OL11-END-10118-B PAGE 01:17
2	
3	
4	
5	
6	
7	
8	
9	
10	
11	

6TH OF OCTOBER CITY RAIL TRANSIT MONORAIL &
NEW CAPITAL CITY RAIL TRANSIT MONORAIL

The Authority — Hill International Authority Consultant — Main Contractor — Designer

CONTRACTOR CONSULTANT:
ENGINEERING HOUSE FOR CONSULTANCY

SCALE	SHOP DRAWING	DATE
AS SHOWN		20.11.2024

REV	DATE	BY	DESCRIPTION	CHK	APD
A	20-11-24	E.SH	ISSUE FOR APPROVAL	A.SH	M.M

DRAWING TITLE:
6TH OF OCTOBER MONORAIL
SHOP DRAWING FOR BRIDGE 6OL11-37
STEEL TRUSS (II).
SPLICE CONNECTION.5

Project Code	Rubric	Initiator	Lot	Ref	Number	Revision
93M	0407	AAC	60L11	DWG	90212	A

Tekla structures

-Drawing shall be updated according to the comments on the GA drawing.
-Approval is subjected to the approval of coordination package between multi-discipline.

REVIEWED WITH COMMENT
MONORAILS PROJECT

All holes are 22mm U.N.O Length & Area & Weight per piece						
1001	FLT25*400	S355J2N	4	800.0	0.41	34.9
Mark	Profile	Grade	QTY	Length	Area	Weight

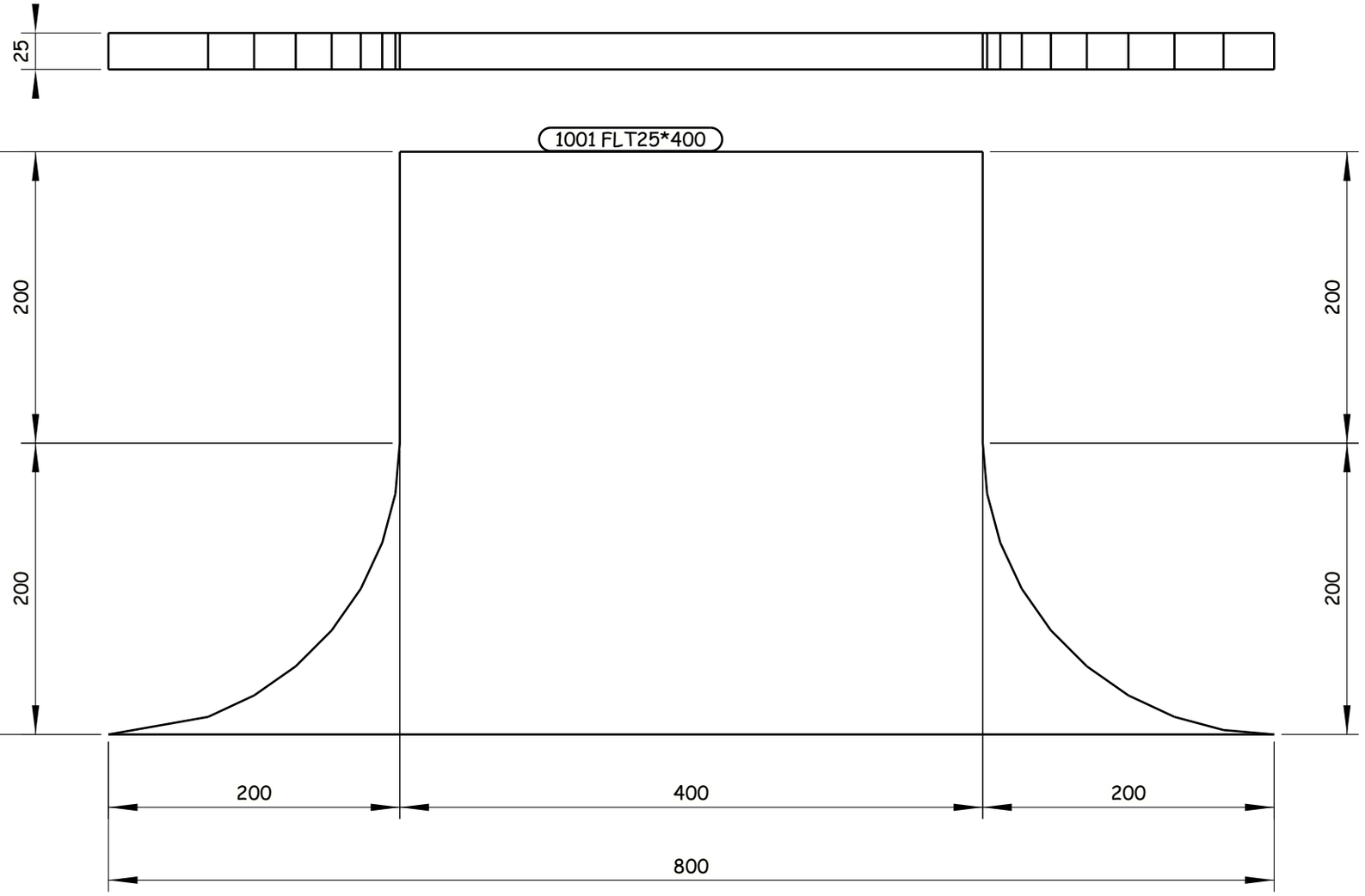

4 REQUIRED AS DRAWN E.SH 1001

6 October Monorail
Engineering Unit
Valid For Construction

GENERAL NOTES:

1. ALL DIMENSIONS ARE IN MILLIMETERS UNLESS OTHERWISE SPECIFIED.
2. LEVELS ARE IN METERS
3. DESIGN SERVICE LIFE OF 100 YEARS.
4. FLANGES OF TOP AND BOTTOM CHORDS TO BE SUPPLIED WITH IMPROVED THROUGH THICKNESS PROPERTIES Z25 ACCORDING TO EN10164.

REFERENCE DRAWINGS

1	93M-0407-SEN-6OL11-END-10118-B PAGE 01:17
2	
3	
4	
5	
6	
7	
8	
9	
10	
11	

6TH OF OCTOBER CITY RAIL TRANSIT MONORAIL &
NEW CAPITAL CITY RAIL TRANSIT MONORAIL

The Authority
Hill International
Authority Consultant

ORASCOM CONSTRUCTION
BOMBARDIER
Main Contractor

SENER
SHAKER CONSULTANCY GROUP
Designer

CONTRACTOR / CONSULTANT :
ENGINEERING HOUSE FOR CONSULTANCY

REV	DATE	BY	DESCRIPTION	CHK	APD
A	20-11-24	E.SH	ISSUE FOR APPROVAL	A.SH	M.M

SCALE: AS SHOWN | CHD DRAWING | DATE: 20.11.2024

DRAWING TITLE:
6TH OF OCTOBER MONORAIL
SHOP DRAWING FOR BRIDGE 6OL11-37
STEEL TRUSS (II).
1001

Project Code	Rubric	Initiator	Lot	Ref	Number	Revision
93M	0407	AAC	60L11	DWG	90213	A

Tekla structures

-Drawing shall be updated according to the comments on the GA drawing.
-Approval is subjected to the approval of coordination package between multi-discipline.

REVIEWED WITH COMMENT
MONORAILS PROJECT

All holes are 22mm U.N.O Length & Area & Weight per piece						
1002	FLT25*400	S355J2N	8	687.5	0.34	28.7
Mark	Profile	Grade	QTY	Length	Area	Weight

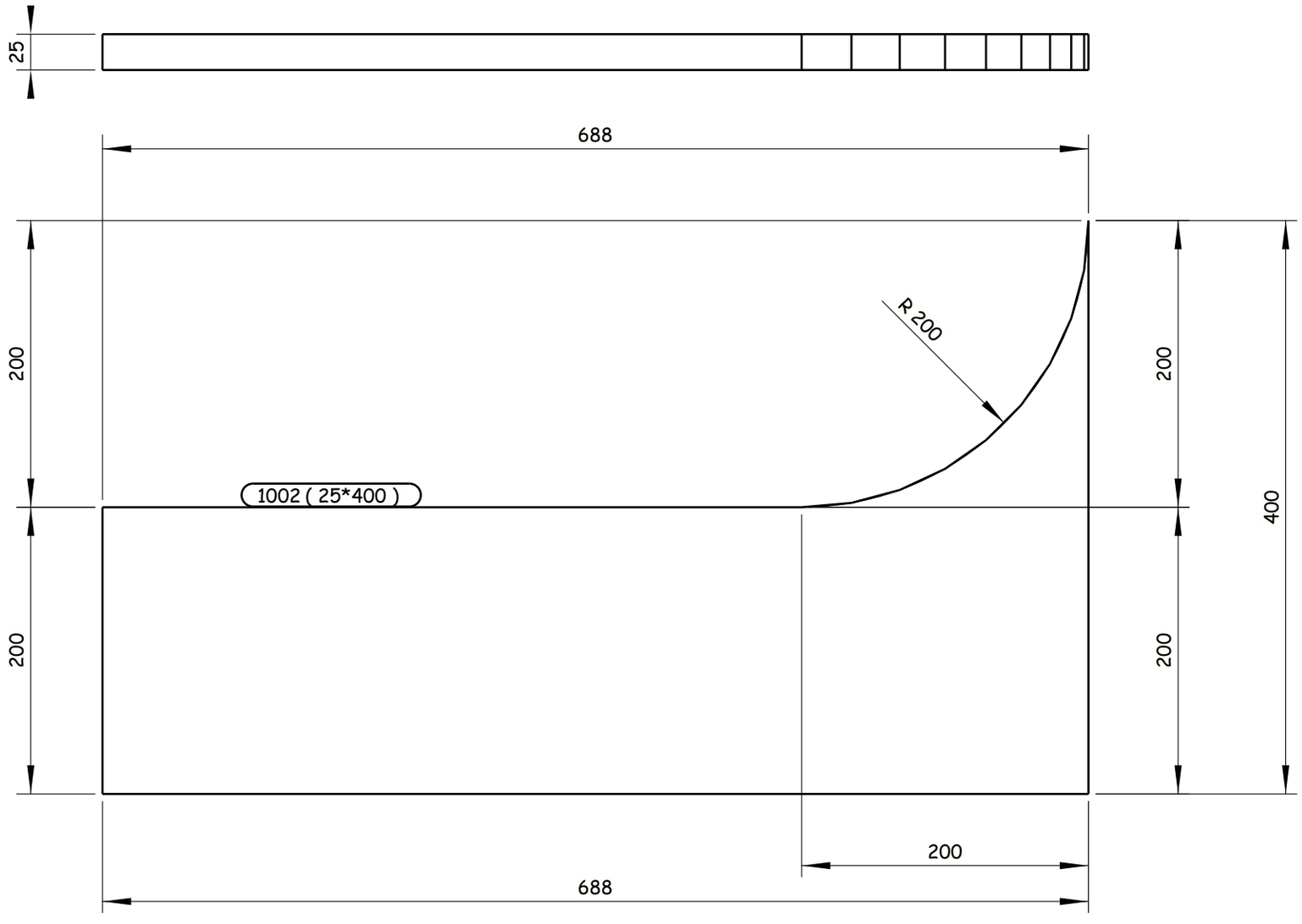

8 REQUIRED AS DRAWN E.SH 1002

GENERAL NOTES:

1. ALL DIMENSIONS ARE IN MILLIMETERS UNLESS OTHERWISE SPECIFIED.
2. LEVELS ARE IN METERS
3. DESIGN SERVICE LIFE OF 100 YEARS.
4. FLANGES OF TOP AND BOTTOM CHORDS TO BE SUPPLIED WITH IMPROVED THROUGH THICKNESS PROPERTIES Z25 ACCORDING TO EN10164.

REFERENCE DRAWINGS

1	93M-0407-SEN-6OL11-END-10118-B PAGE 01:17
2	
3	
4	
5	
6	
7	
8	
9	
10	
11	

6TH OF OCTOBER CITY RAIL TRANSIT MONORAIL &
NEW CAPITAL CITY RAIL TRANSIT MONORAIL

The Authority
Hill International
Authority Consultant

ORASCOM CONSTRUCTION
Main Contractor

BOMBARDIER
SENER
SHAKER CONSULTANCY GROUP
Designer

CONTRACTOR & CONSULTANT:
ENGINEERING HOUSE FOR CONSULTANCY

6 October Monorail
Engineering Unit
Valid For Construction

SCALE	SHOP DRAWING	DATE
AS SHOWN		20.11.2024

REV	DATE	BY	DESCRIPTION	CHK	APD
A	20-11-24	E.SH	ISSUE FOR APPROVAL	A.SH	M.M

DRAWING TITLE:
6TH OF OCTOBER MONORAIL
SHOP DRAWING FOR BRIDGE 6OL11-37
STEEL TRUSS (II).
1002

Project Code	Rubric	Initiator	Lot	Ref	Number	Revision
93M	0407	AAC	60L11	DWG	90214	A

Tekla structures

-Drawing shall be updated according to the comments on the GA drawing.
-Approval is subjected to the approval of coordination package between multi-discipline.

REVIEWED WITH COMMENT
MONORAILS PROJECT

All holes are 22mm U.N.O Length & Area & Weight per piece

Mark	Profile	Grade	QTY	Length	Area	Weight
FL1	FLT20*400	S355J2N	4	3000.0	2.54	188.4

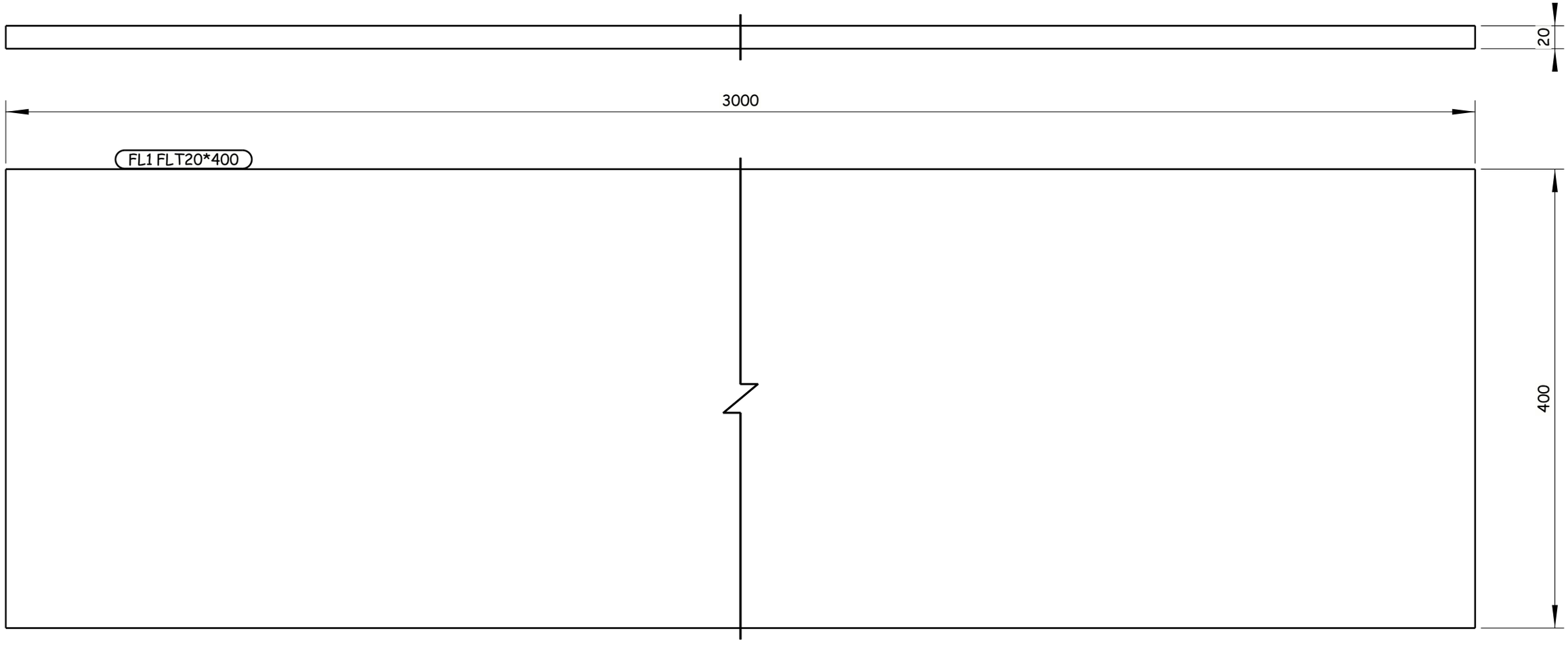

4 REQUIRED AS DRAWN E.SH FL1

GENERAL NOTES:

1. ALL DIMENSIONS ARE IN MILLIMETERS UNLESS OTHERWISE SPECIFIED.
2. LEVELS ARE IN METERS
3. DESIGN SERVICE LIFE OF 100 YEARS.
4. FLANGES OF TOP AND BOTTOM CHORDS TO BE SUPPLIED WITH IMPROVED THROUGH THICKNESS PROPERTIES Z25 ACCORDING TO EN10164.

REFERENCE DRAWINGS

1	93M-0407-SEN-6OL11-END-10118-B PAGE 01:17
2	
3	
4	
5	
6	
7	
8	
9	
10	
11	

6TH OF OCTOBER CITY RAIL TRANSIT MONORAIL &
NEW CAPITAL CITY RAIL TRANSIT MONORAIL

The Authority
Hill International
Authority Consultant

ORASCOM CONSTRUCTION
Main Contractor

BOMBARDIER
SENER
SHAKER CONSULTANCY GROUP
Designer

CONTRACTOR & CONSULTANT:
ENGINEERING HOUSE FOR CONSULTANCY

SCALE: AS SHOWN | CHK'D DRAWING | DATE: 20.11.2024

REV	DATE	BY	DESCRIPTION	CHK	APD
A	20-11-24	E.SH	ISSUE FOR APPROVAL	A.SH	M.M

6 October: Monorail
Engineering Unit
Valid For Construction

DRAWING TITLE:
6TH OF OCTOBER MONORAIL
SHOP DRAWING FOR BRIDGE 6OL11-37
STEEL TRUSS (II).
FL1

Project Code	Rubric	Initiator	Lot	Ref	Number	Revision
93M	0407	AAC	60L11	DWG	90215	A

Tekla structures

-Drawing shall be updated according to the comments on the GA drawing.
-Approval is subjected to the approval of coordination package between multi-discipline.

REVIEWED WITH COMMENT
MONORAILS PROJECT

All holes are 22mm U.N.O Length & Area & Weight per piece

Mark	Profile	Grade	QTY	Length	Area	Weight
FL2	PL20*700	S355J2N	8	800.0	0.65	46.7

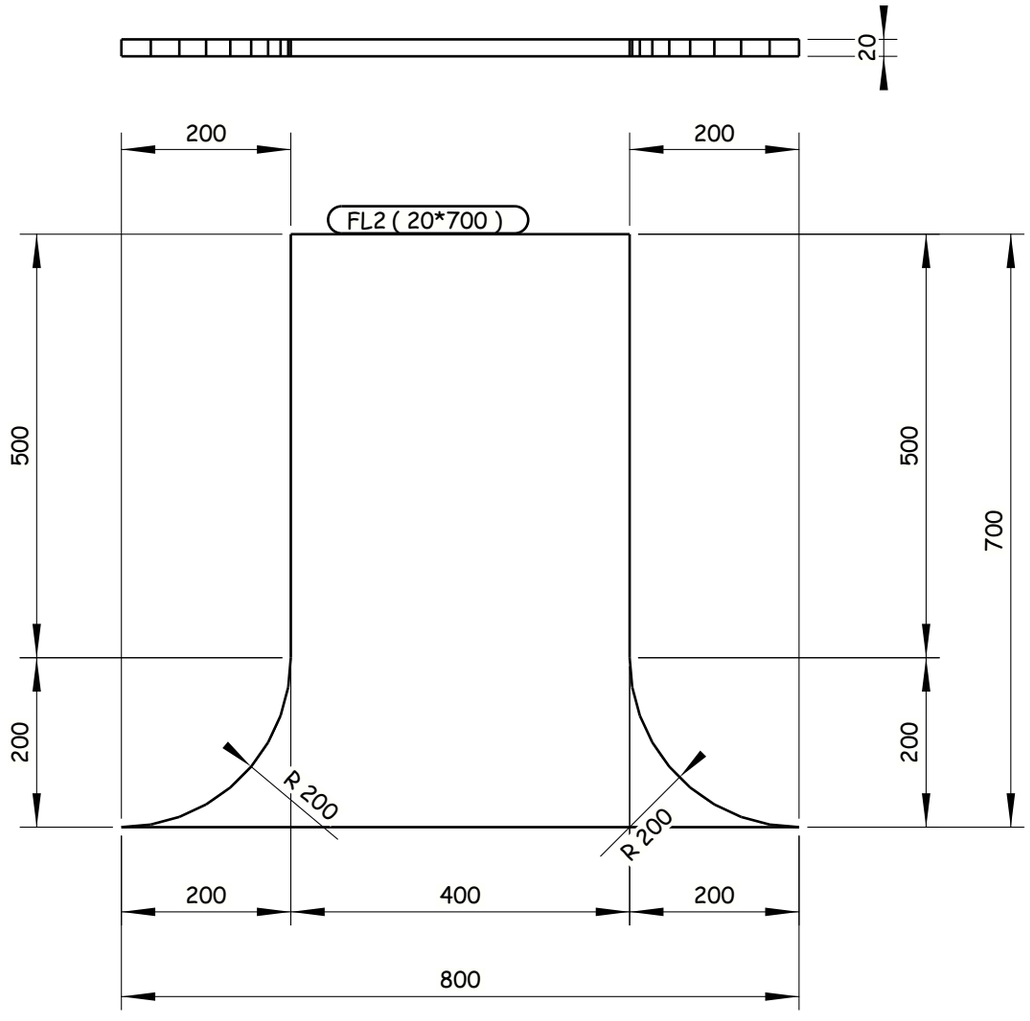

8 REQUIRED AS DRAWN E.SH FL2

Tekla structures

GENERAL NOTES:

1. ALL DIMENSIONS ARE IN MILLIMETERS UNLESS OTHERWISE SPECIFIED.
2. LEVELS ARE IN METERS
3. DESIGN SERVICE LIFE OF 100 YEARS.
4. FLANGES OF TOP AND BOTTOM CHORDS TO BE SUPPLIED WITH IMPROVED THROUGH THICKNESS PROPERTIES Z25 ACCORDING TO EN10164.

REFERENCE DRAWINGS

1	93M-0407-SEN-6OL11-END-10118-B PAGE 01:17
2	
3	
4	
5	
6	
7	
8	
9	
10	
11	

6TH OF OCTOBER CITY RAIL TRANSIT MONORAIL &
NEW CAPITAL CITY RAIL TRANSIT MONORAIL

The Authority — Authority Consultant
Hill International — Authority Consultant
ORASCOM CONSTRUCTION — Main Contractor
BOMBARDIER — Main Contractor
SENER — Designer
SHAKER CONSULTANCY GROUP — Designer

CONTRACTOR & CONSULTANT: ENGINEERING HOUSE FOR CONSULTANCY

SCALE: AS SHOWN | CHK'D DRAWING | DATE: 20.11.2024

REV	DATE	BY	DESCRIPTION	CHK	APD
A	20-11-24	E.SH	ISSUE FOR APPROVAL	A.SH	M.M

6 October: Monorail
Engineering Unit
Valid For Construction

DRAWING TITLE:
6TH OF OCTOBER MONORAIL
SHOP DRAWING FOR BRIDGE 6OL11-37
STEEL TRUSS (II).
FL2

Project Code	Rubric	Initiator	Lot	Ref	Number	Revision
93M	0407	AAC	60L11	DWG	90216	A

-Drawing shall be updated according to the comments on the GA drawing.
-Approval is subjected to the approval of coordination package between multi-discipline.

REVIEWED WITH COMMENT
MONORAILS PROJECT

All holes are 22mm U.N.O Length & Area & Weight per piece

Mark	Profile	Grade	QTY	Length	Area	Weight
FP1	PL45*820	S355J2N	7	1148.7	2.03	327.4

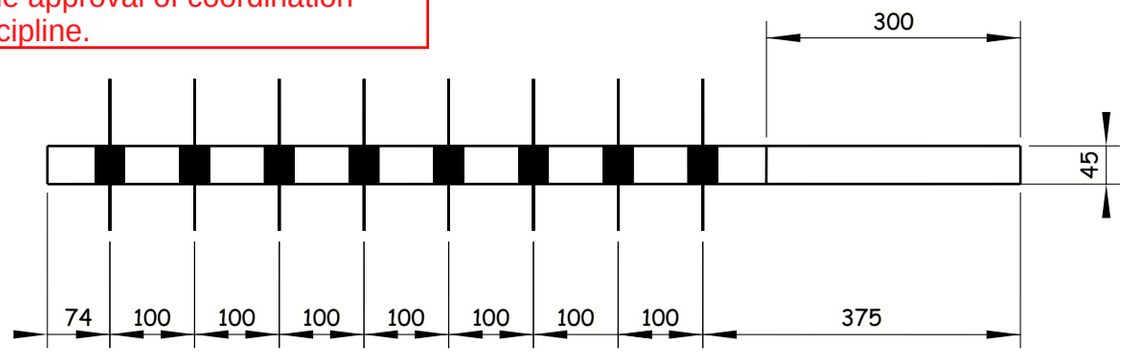

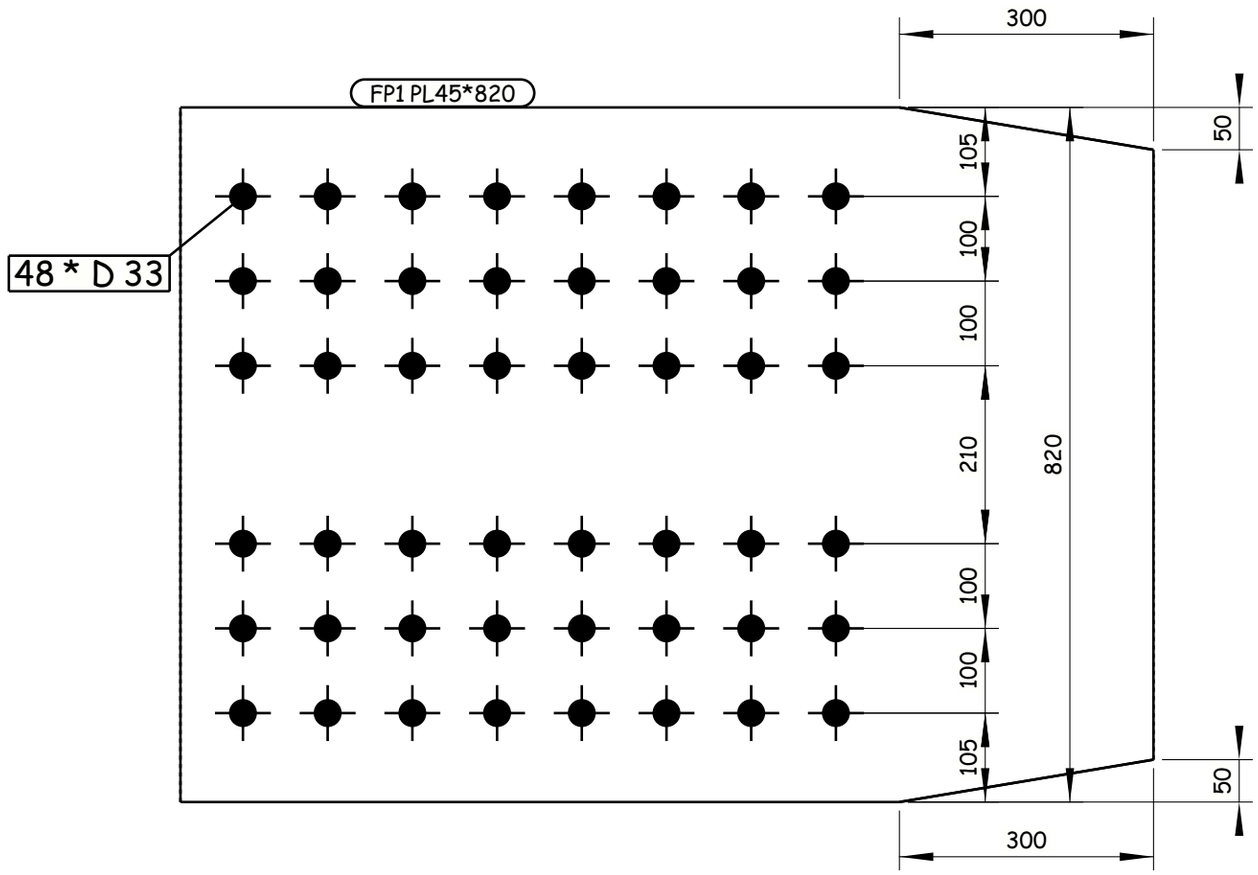

7 REQUIRED AS DRAWN E.SH FP1

Tekla structures

GENERAL NOTES:

1. ALL DIMENSIONS ARE IN MILLIMETERS UNLESS OTHERWISE SPECIFIED.
2. LEVELS ARE IN METERS
3. DESIGN SERVICE LIFE OF 100 YEARS.
4. FLANGES OF TOP AND BOTTOM CHORDS TO BE SUPPLIED WITH IMPROVED THROUGH THICKNESS PROPERTIES Z25 ACCORDING TO EN10164.

REFERENCE DRAWINGS

1	93M-0407-SEN-6OL11-END-10118-B PAGE 01:17
2	
3	
4	
5	
6	
7	
8	
9	
10	
11	

6TH OF OCTOBER CITY RAIL TRANSIT MONORAIL &
NEW CAPITAL CITY RAIL TRANSIT MONORAIL

The Authority
Hill International
Authority Consultant

Main Contractor

Designer

CONTRACTOR/ CONSULTANT:

ENGINEERING HOUSE FOR CONSULTANCY

6 October Monorail
Engineering Unit
Valid For Construction

REV	DATE	BY	DESCRIPTION	CHK	APD
A	20-11-24	E.SH	ISSUE FOR APPROVAL	A.SH	M.M

SCALE: AS SHOWN | SHOP DRAWING | DATE: 20.11.2024

DRAWING TITLE:
6TH OF OCTOBER MONORAIL
SHOP DRAWING FOR BRIDGE 6OL11-37
STEEL TRUSS (II).
FP1

Project Code	Rubric	Initiator	Lot	Ref	Number	Revision
93M	0407	AAC	60L11	DWG	90217	A

-Drawing shall be updated according to the comments on the GA drawing.
-Approval is subjected to the approval of coordination package between multi-discipline.

REVIEWED WITH COMMENT
MONORAILS PROJECT

All holes are 22mm U.N.O Length & Area & Weight per piece

Mark	Profile	Grade	QTY	Length	Area	Weight
FP2	PL45*820	S355J2N	1	1148.8	2.03	327.5

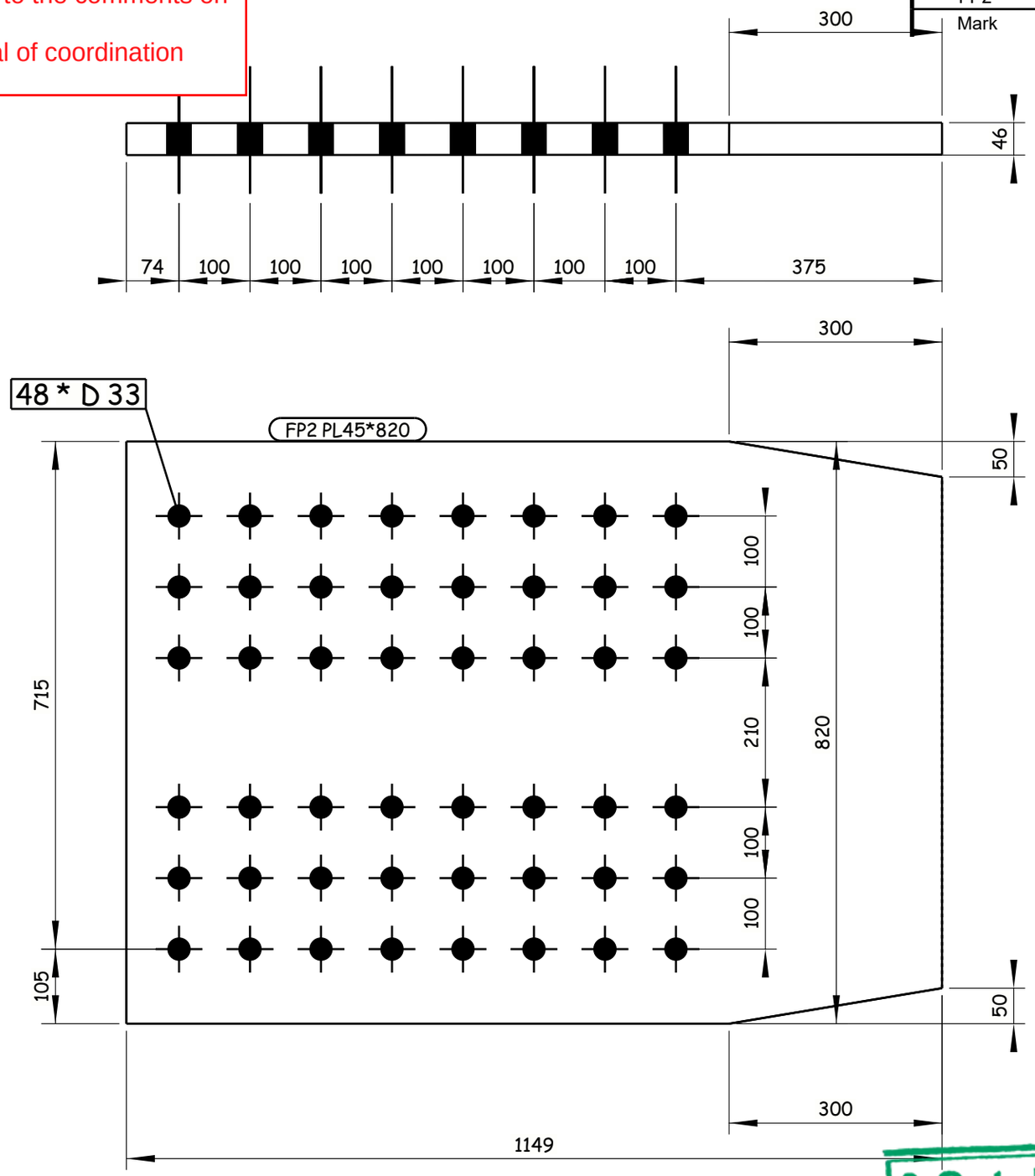

1 REQUIRED AS DRAWN E.SH FP2

GENERAL NOTES:

1. ALL DIMENSIONS ARE IN MILLIMETERS UNLESS OTHERWISE SPECIFIED.
2. LEVELS ARE IN METERS
3. DESIGN SERVICE LIFE OF 100 YEARS.
4. FLANGES OF TOP AND BOTTOM CHORDS TO BE SUPPLIED WITH IMPROVED THROUGH THICKNESS PROPERTIES Z25 ACCORDING TO EN10164.

REFERENCE DRAWINGS

1	93M-0407-SEN-6OL11-END-10118-B PAGE 01:17
2	
3	
4	
5	
6	
7	
8	
9	
10	
11	

6TH OF OCTOBER CITY RAIL TRANSIT MONORAIL &
NEW CAPITAL CITY RAIL TRANSIT MONORAIL

The Authority — Hill International Authority Consultant

ORASCOM CONSTRUCTION — BOMBARDIER — Main Contractor

SENER — SHAKER CONSULTANCY GROUP — Designer

CONTRACTOR & CONSULTANT:
ENGINEERING HOUSE FOR CONSULTANCY

SCALE	CHD DRAWING	DATE
AS SHOWN		20.11.2024

REV	DATE	BY	DESCRIPTION	CHK	APD
A	20-11-24	E.SH	ISSUE FOR APPROVAL	A.SH	M.M

6 October Monorail
Engineering Unit
Valid For Construction

DRAWING TITLE:
6TH OF OCTOBER MONORAIL
SHOP DRAWING FOR BRIDGE 6OL11-37
STEEL TRUSS (II).
FP2

Project Code	Rubric	Initiator	Lot	Ref	Number	Revision
93M	0407	AAC	60L11	DWG	90218	A

Tekla structures

-Drawing shall be updated according to the comments on the GA drawing.
-Approval is subjected to the approval of coordination package between multi-discipline.

REVIEWED WITH COMMENT
MONORAILS PROJECT

All holes are 22mm U.N.O Length & Area & Weight per piece

Mark	Profile	Grade	QTY	Length	Area	Weight
FP3	FLT30*600	S355J2N	2	12504.5	15.73	1730.6

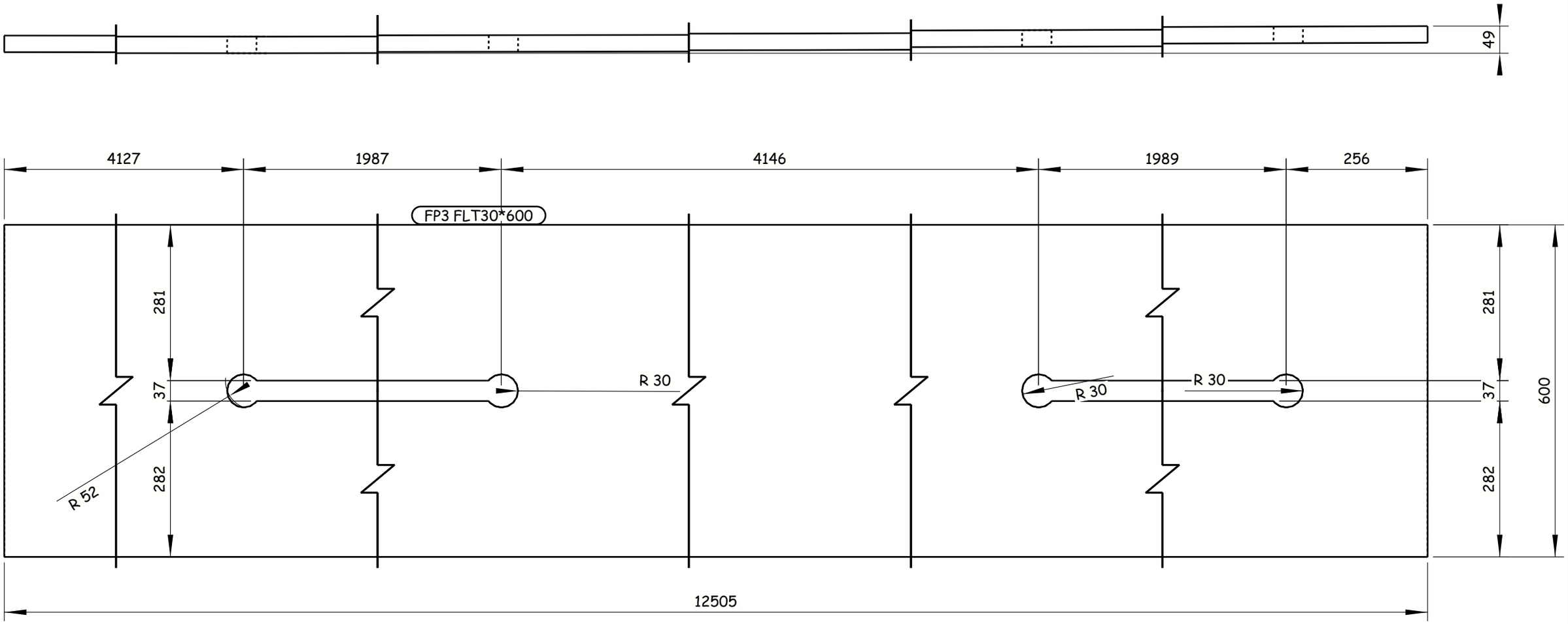

2 REQUIRED AS DRAWN E.SH FP3

GENERAL NOTES:
1. ALL DIMENSIONS ARE IN MILLIMETERS UNLESS OTHERWISE SPECIFIED.
2. LEVELS ARE IN METERS
3. DESIGN SERVICE LIFE OF 100 YEARS.
4. FLANGES OF TOP AND BOTTOM CHORDS TO BE SUPPLIED WITH IMPROVED THROUGH THICKNESS PROPERTIES Z25 ACCORDING TO EN10164.

REFERENCE DRAWINGS

1	93M-0407-SEN-6OL11-END-10118-B PAGE 01:17
2	
3	
4	
5	
6	
7	
8	
9	
10	
11	

6TH OF OCTOBER CITY RAIL TRANSIT MONORAIL &
NEW CAPITAL CITY RAIL TRANSIT MONORAIL

The Authority
Hill International
Authority Consultant

Main Contractor

Designer

CONTRACTOR / CONSULTANT:
ENGINEERING HOUSE FOR CONSULTANCY

SCALE: AS SHOWN | CHD DRAWING | DATE: 20.11.2024

REV	DATE	BY	DESCRIPTION	CHK	APD
A	20-11-24	E.SH	ISSUE FOR APPROVAL	A.SH	M.M

6 October Monorail
Engineering Unit
Valid For Construction

DRAWING TITLE:
6TH OF OCTOBER MONORAIL
SHOP DRAWING FOR BRIDGE 6OL11-37
STEEL TRUSS (II).
FP3

Project Code	Rubric	Initiator	Lot	Ref	Number	Revision
9 3 M	0 4 0 7	A A C	6 0 L 1 1	D W G	90219	A

Tekla structures

-Drawing shall be updated according to the comments on the GA drawing.
-Approval is subjected to the approval of coordination package between multi-discipline.

REVIEWED WITH COMMENT
MONORAILS PROJECT

All holes are 22mm U.N.O Length & Area & Weight per piece

Mark	Profile	Grade	QTY	Length	Area	Weight
FP4	FLT30*600	S355J2N	4	12500.6	15.79	1766.3

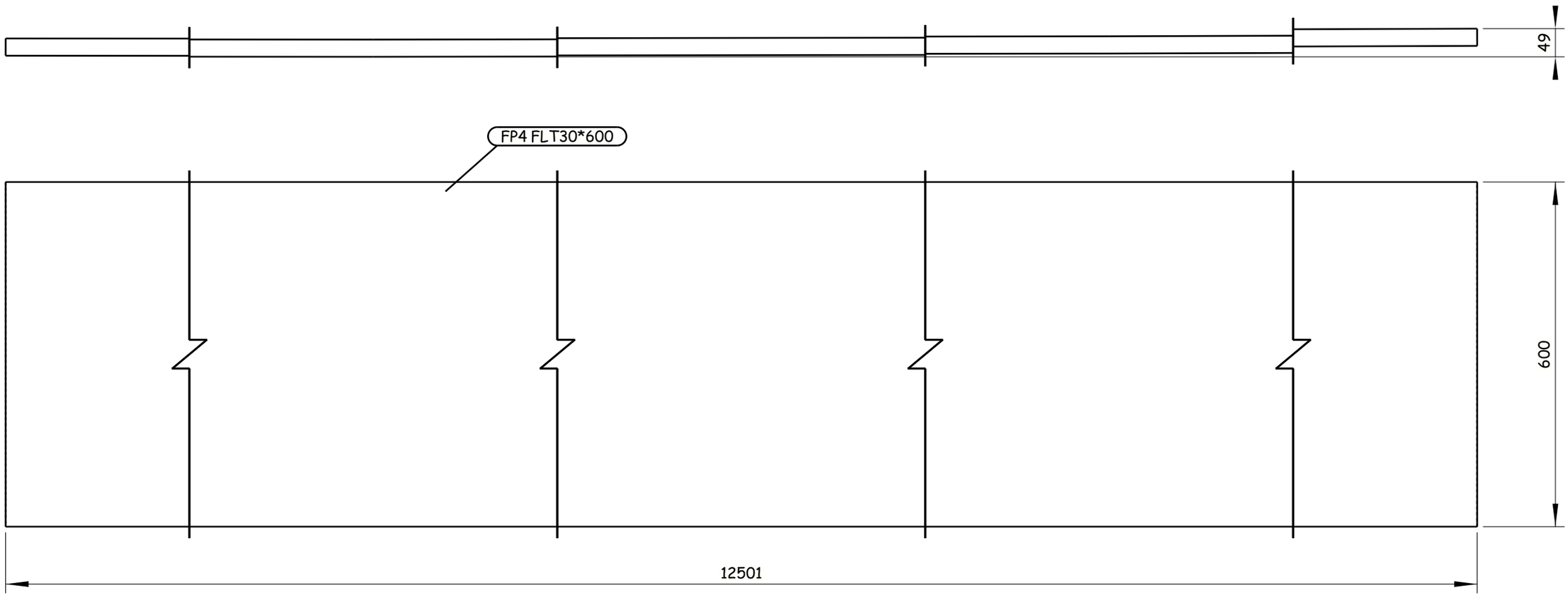

4 REQUIRED AS DRAWN E.SH FP4

GENERAL NOTES:

1. ALL DIMENSIONS ARE IN MILLIMETERS UNLESS OTHERWISE SPECIFIED.
2. LEVELS ARE IN METERS
3. DESIGN SERVICE LIFE OF 100 YEARS.
4. FLANGES OF TOP AND BOTTOM CHORDS TO BE SUPPLIED WITH IMPROVED THROUGH THICKNESS PROPERTIES Z25 ACCORDING TO EN10164.

REFERENCE DRAWINGS

1	93M-0407-SEN-6OL11-END-10118-B PAGE 01:17
2	
3	
4	
5	
6	
7	
8	
9	
10	
11	

6TH OF OCTOBER CITY RAIL TRANSIT MONORAIL &
NEW CAPITAL CITY RAIL TRANSIT MONORAIL

The Authority — Authority Consultant: Hill International — Main Contractor: ORASCOM CONSTRUCTION — Designer: BOMBARDIER / SENER / SHAKER CONSULTANCY GROUP

CONTRACTOR / CONSULTANT: ENGINEERING HOUSE FOR CONSULTANCY

6 October Monorail
Engineering Unit
Valid For Construction

SCALE: AS SHOWN | SHD DRAWING | DATE: 20.11.2024

REV	DATE	BY	DESCRIPTION	CHK	APD
A	20-11-24	E.SH	ISSUE FOR APPROVAL	A.SH	M.M

DRAWING TITLE:
6TH OF OCTOBER MONORAIL
SHOP DRAWING FOR BRIDGE 6OL11-37
STEEL TRUSS (II).
FP4

Project Code	Rubric	Initiator	Lot	Ref	Number	Revision
93M	0407	AAC	60L11	DWG	90220	A

Tekla structures

-Drawing shall be updated according to the comments on the GA drawing.
-Approval is subjected to the approval of coordination package between multi-discipline.

REVIEWED WITH COMMENT
MONORAILS PROJECT

All holes are 22mm U.N.O Length & Area & Weight per piece

Mark	Profile	Grade	QTY	Length	Area	Weight
FP5	FLT25*600	S355J2N	4	18326.2	22.77	2108.1

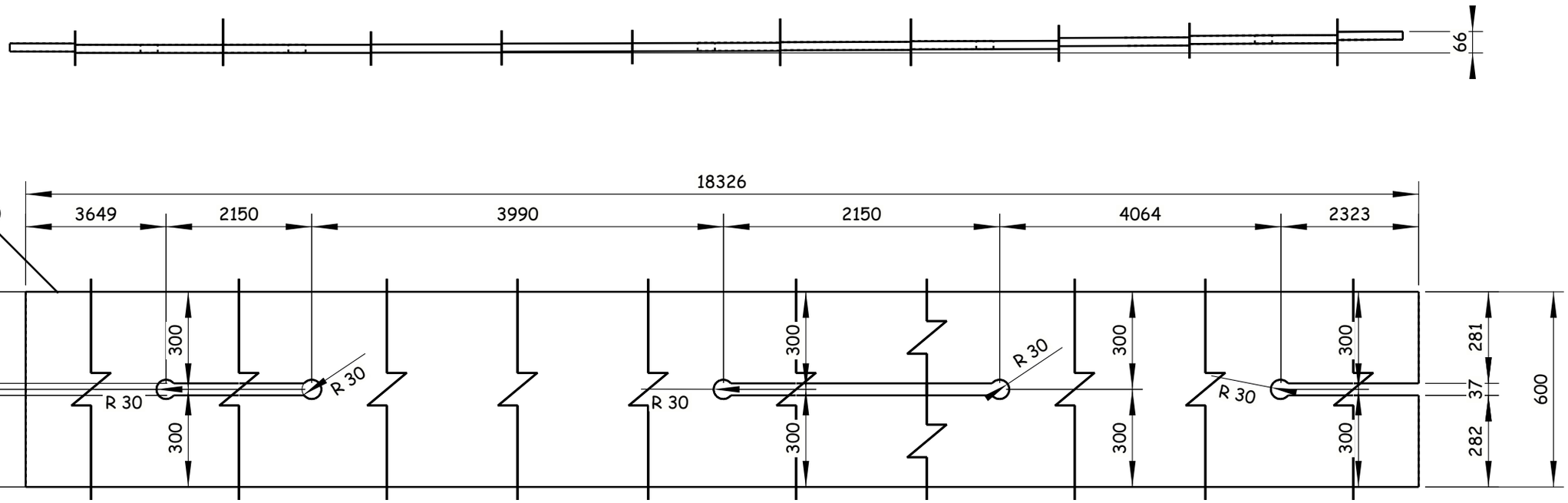

4 REQUIRED AS DRAWN E.SH FP5

GENERAL NOTES:

1. ALL DIMENSIONS ARE IN MILLIMETERS UNLESS OTHERWISE SPECIFIED.
2. LEVELS ARE IN METERS
3. DESIGN SERVICE LIFE OF 100 YEARS.
4. FLANGES OF TOP AND BOTTOM CHORDS TO BE SUPPLIED WITH IMPROVED THROUGH THICKNESS PROPERTIES Z25 ACCORDING TO EN10164.

REFERENCE DRAWINGS

1	93M-0407-SEN-6OL11-END-10118-B PAGE 01:17
2	
3	
4	
5	
6	
7	
8	
9	
10	
11	

6TH OF OCTOBER CITY RAIL TRANSIT MONORAIL &
NEW CAPITAL CITY RAIL TRANSIT MONORAIL

The Authority — Hill International — Authority Consultant
ORASCOM CONSTRUCTION — Main Contractor
BOMBARDIER — SENER — SHAKER CONSULTANCY GROUP — Designer

CONTRACTOR / CONSULTANT :
ENGINEERING HOUSE FOR CONSULTANCY

6 October Monorail
Engineering Unit
Valid For Construction

REV	DATE	BY	DESCRIPTION	CHK	APD
A	20-11-24	E.SH	ISSUE FOR APPROVAL	A.SH	M.M

SCALE: AS SHOWN | SHOP DRAWING | DATE: 20.11.2024

DRAWING TITLE:
6TH OF OCTOBER MONORAIL
SHOP DRAWING FOR BRIDGE 6OL11-37
STEEL TRUSS (II).
FP5

Project Code	Rubric	Initiator	Lot	Ref	Number	Revision
93M	0407	AAC	60L11	DWG	90221	A

Tekla structures

-Drawing shall be updated according to the comments on the GA drawing.
-Approval is subjected to the approval of coordination package between multi-discipline.

REVIEWED WITH COMMENT
MONORAILS PROJECT

All holes are 22mm U.N.O Length & Area & Weight per piece

Mark	Profile	Grade	QTY	Length	Area	Weight
FP6	FLT25*600	S355J2N	1	18321.3	22.73	2095.8

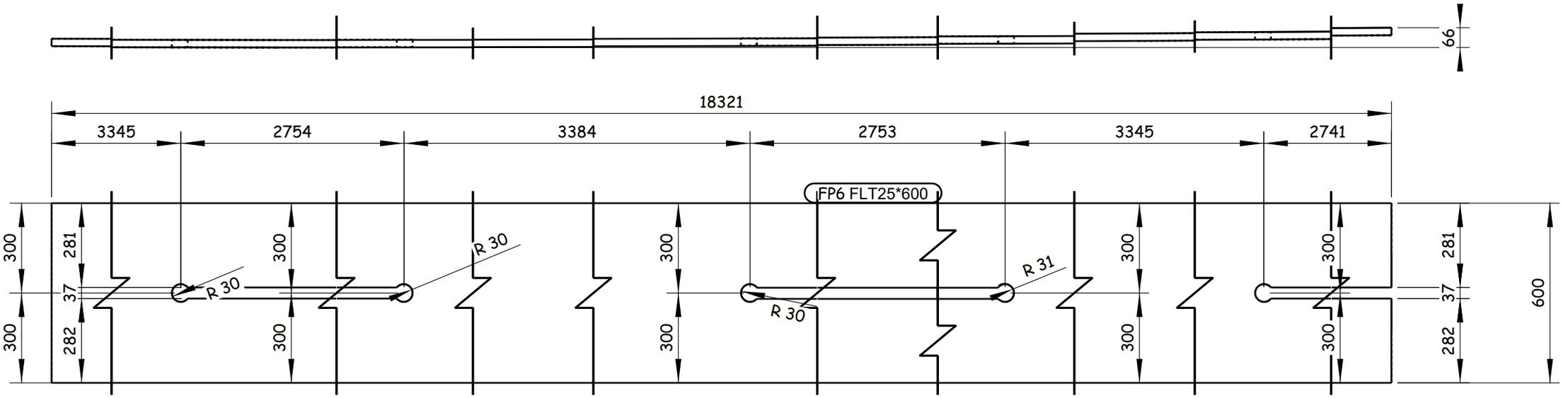

1 REQUIRED AS DRAWN E.SH FP6

GENERAL NOTES:

1. ALL DIMENSIONS ARE IN MILLIMETERS UNLESS OTHERWISE SPECIFIED.
2. LEVELS ARE IN METERS
3. DESIGN SERVICE LIFE OF 100 YEARS.
4. FLANGES OF TOP AND BOTTOM CHORDS TO BE SUPPLIED WITH IMPROVED THROUGH THICKNESS PROPERTIES Z25 ACCORDING TO EN10164.

REFERENCE DRAWINGS

1	93M-0407-SEN-6OL11-END-10118-B PAGE 01:17
2	
3	
4	
5	
6	
7	
8	
9	
10	
11	

6TH OF OCTOBER CITY RAIL TRANSIT MONORAIL &
NEW CAPITAL CITY RAIL TRANSIT MONORAIL

The Authority — Hill International — Authority Consultant
ORASCOM CONSTRUCTION — Main Contractor
BOMBARDIER
SENER — SHAKER CONSULTANCY GROUP — Designer

CONTRACTOR & CONSULTANT:
EHC — ENGINEERING HOUSE FOR CONSULTANCY

6 October Monorail
Engineering Unit
Valid For Cönstruction

REV.	DATE	BY	DESCRIPTION	CHK	APD
A	20-11-24	E.SH	ISSUE FOR APPROVAL	A.SH	M.M

SCALE: AS SHOWN | SHOP DRAWING | DATE: 20.11.2024

DRAWING TITLE:
6TH OF OCTOBER MONORAIL
SHOP DRAWING FOR BRIDGE 6OL11-37
STEEL TRUSS (II).
FP6

Project Code	Rubric	Initiator	Lot	Ref	Number	Revision
93M	0407	AAC	60L11	DWG	90222	A

Tekla structures

-Drawing shall be updated according to the comments on the GA drawing.
-Approval is subjected to the approval of coordination package between multi-discipline.

REVIEWED WITH COMMENT
MONORAILS PROJECT

All holes are 22mm U.N.O Length & Area & Weight per piece

Mark	Profile	Grade	QTY	Length	Area	Weight
FP7	PL40*700	S355J2N	1	1467.4	2.19	311.2

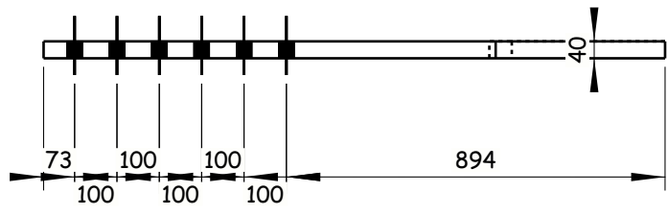

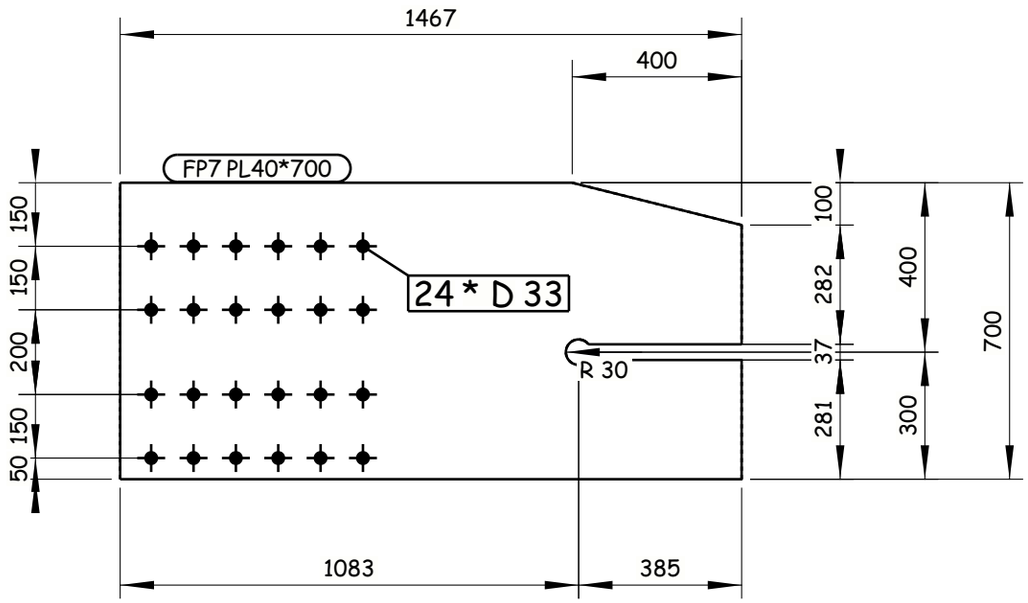

1 REQUIRED AS DRAWN E.SH FP7

GENERAL NOTES:

1. ALL DIMENSIONS ARE IN MILLIMETERS UNLESS OTHERWISE SPECIFIED.
2. LEVELS ARE IN METERS
3. DESIGN SERVICE LIFE OF 100 YEARS.
4. FLANGES OF TOP AND BOTTOM CHORDS TO BE SUPPLIED WITH IMPROVED THROUGH THICKNESS PROPERTIES Z25 ACCORDING TO EN10164.

REFERENCE DRAWINGS

1	93M-0407-SEN-6OL11-END-10118-B PAGE 01:17
2	
3	
4	
5	
6	
7	
8	
9	
10	
11	

6TH OF OCTOBER CITY RAIL TRANSIT MONORAIL &
NEW CAPITAL CITY RAIL TRANSIT MONORAIL

The Authority — Hill International — Authority Consultant
ORASCOM CONSTRUCTION — BOMBARDIER — Main Contractor
SENER — SHAKER CONSULTANCY GROUP — Designer

CONTRACTOR & CONSULTANT:
ENGINEERING HOUSE FOR CONSULTANCY

6 October Monorail
Engineering Unit
Valid For Construction

SCALE: AS SHOWN | CHD DRAWING | DATE: 20.11.2024

DRAWING TITLE:
6TH OF OCTOBER MONORAIL
SHOP DRAWING FOR BRIDGE 6OL11-37
STEEL TRUSS (II).
FP7

REV	DATE	BY	DESCRIPTION	CHK	APD
A	20-11-24	E.SH	ISSUE FOR APPROVAL	A.SH	M.M

Project Code	Rubric	Initiator	Lot	Ref	Number	Revision
93M	0407	AAC	6OL111	DWG	90223	A

Tekla structures

-Drawing shall be updated according to the comments on the GA drawing.
-Approval is subjected to the approval of coordination package between multi-discipline.

REVIEWED WITH COMMENT
MONORAILS PROJECT

All holes are 22mm U.N.O Length & Area & Weight per piece

Mark	Profile	Grade	QTY	Length	Area	Weight
FP8	FLT40*600	S355J2N	1	1467.4	1.93	267.9

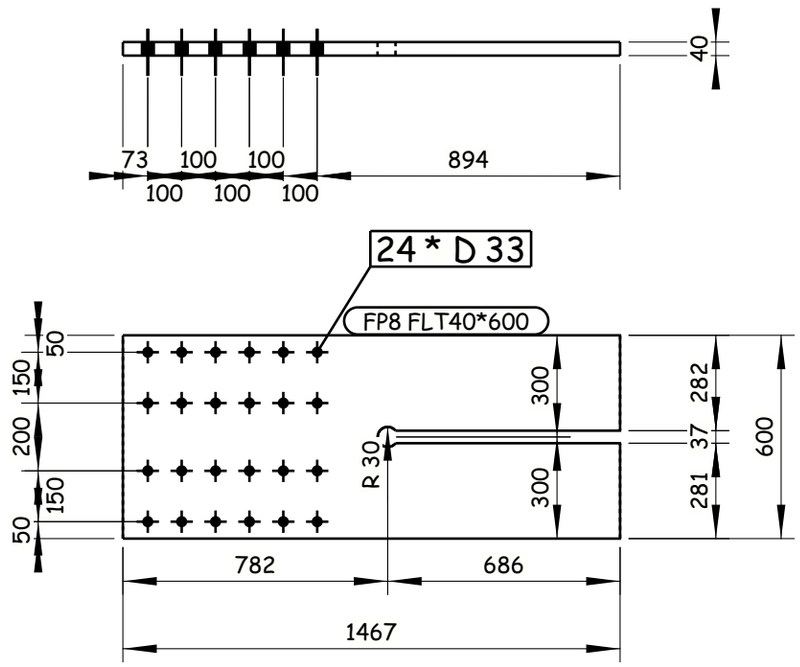

1 REQUIRED AS DRAWN E.SH FP8

GENERAL NOTES:

1. ALL DIMENSIONS ARE IN MILLIMETERS UNLESS OTHERWISE SPECIFIED.
2. LEVELS ARE IN METERS
3. DESIGN SERVICE LIFE OF 100 YEARS.
4. FLANGES OF TOP AND BOTTOM CHORDS TO BE SUPPLIED WITH IMPROVED THROUGH THICKNESS PROPERTIES Z25 ACCORDING TO EN10164.

REFERENCE DRAWINGS

1	93M-0407-SEN-6OL11-END-10118-B PAGE 01:17
2	
3	
4	
5	
6	
7	
8	
9	
10	
11	

6TH OF OCTOBER CITY RAIL TRANSIT MONORAIL &
NEW CAPITAL CITY RAIL TRANSIT MONORAIL

The Authority
Hill International
Authority Consultant

ORASCOM CONSTRUCTION
Main Contractor

BOMBARDIER
SENER
SHAKER CONSULTANCY GROUP
Designer

CONTRACTOR / CONSULTANT :
ENGINEERING HOUSE FOR CONSULTANCY

SCALE: AS SHOWN | SHD DRAWING | DATE: 20.11.2024

REV	DATE	BY	DESCRIPTION	CHK	APD
A	20-11-24	E.SH	ISSUE FOR APPROVAL	A.SH	M.M

6 October Monorail
Engineering Unit
Valid For Construction

DRAWING TITLE:
6TH OF OCTOBER MONORAIL
SHOP DRAWING FOR BRIDGE 6OL11-37
STEEL TRUSS (II).
FP8

Project Code	Rubric	Initiator	Lot	Ref	Number	Revision
93M	0407	AAC	60L11	DWG	90224	A

Tekla structures

-Drawing shall be updated according to the comments on the GA drawing.
-Approval is subjected to the approval of coordination package between multi-discipline.

REVIEWED WITH COMMENT
MONORAILS PROJECT

All holes are 22mm U.N.O Length & Area & Weight per piece

Mark	Profile	Grade	QTY	Length	Area	Weight
FP9	FLT20*400	S355J2N	4	1257.2	1.03	73.3

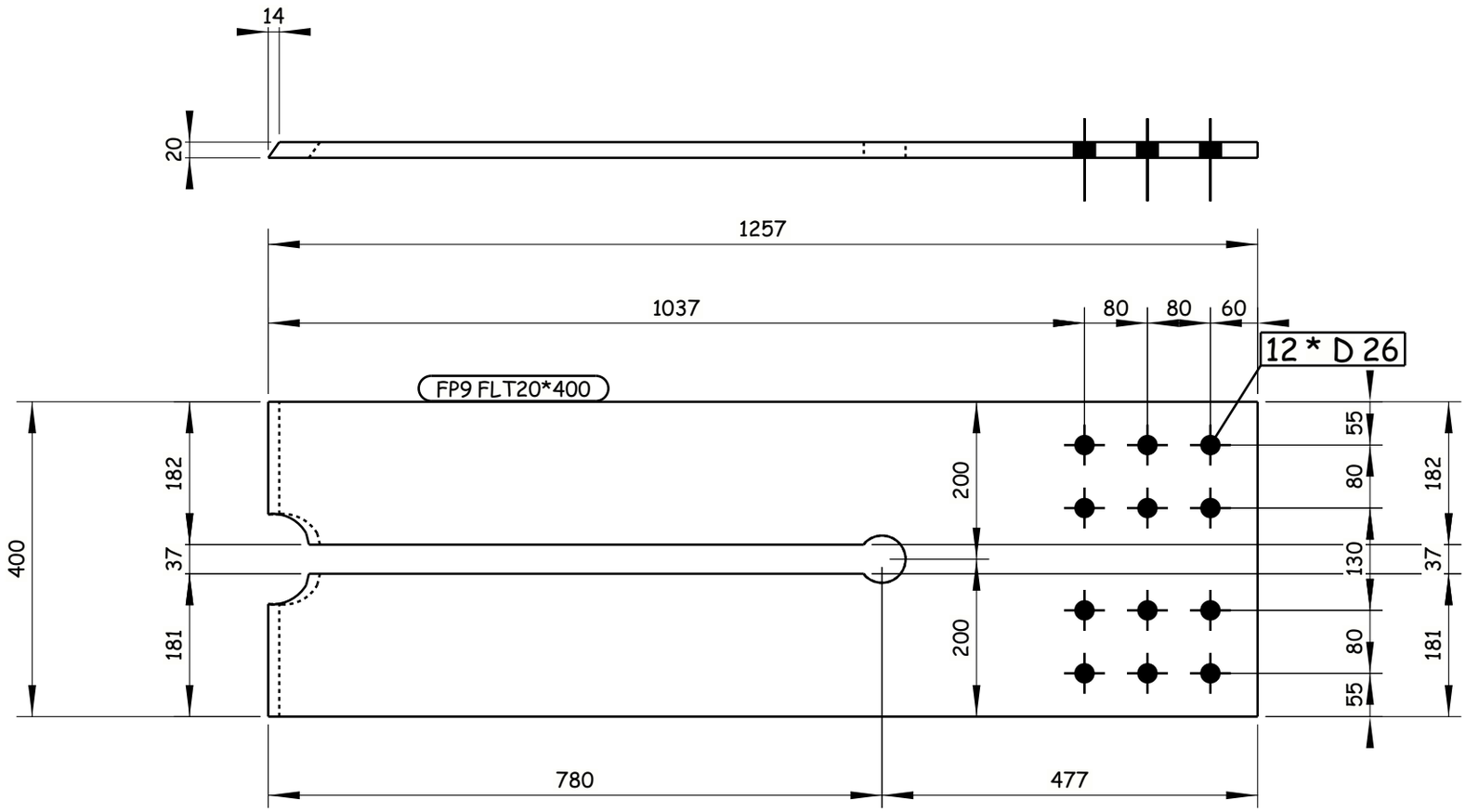

4 REQUIRED AS DRAWN E.SH FP9

GENERAL NOTES:

1. ALL DIMENSIONS ARE IN MILLIMETERS UNLESS OTHERWISE SPECIFIED.
2. LEVELS ARE IN METERS
3. DESIGN SERVICE LIFE OF 100 YEARS.
4. FLANGES OF TOP AND BOTTOM CHORDS TO BE SUPPLIED WITH IMPROVED THROUGH THICKNESS PROPERTIES Z25 ACCORDING TO EN10164.

REFERENCE DRAWINGS

1	93M-0407-SEN-6OL11-END-10118-B PAGE 01:17
2	
3	
4	
5	
6	
7	
8	
9	
10	
11	

6TH OF OCTOBER CITY RAIL TRANSIT MONORAIL &
NEW CAPITAL CITY RAIL TRANSIT MONORAIL

The Authority
Hill International
Authority Consultant

Main Contractor

Designer

CONTRACTOR
CONSULTANT :

ENGINEERING HOUSE FOR CONSULTANCY

SCALE
AS SHOWN

SHD DRAWING

DATE
20.11.2024

6 October Monorail
Engineering Unit
Valid For Construction

DRAWING TITLE:
6TH OF OCTOBER MONORAIL
SHOP DRAWING FOR BRIDGE 6OL11-37
STEEL TRUSS (II).
FP9

REV	DATE	BY	DESCRIPTION	CHK	APD
A	20-11-24	E.SH	ISSUE FOR APPROVAL	A.SH	M.M

Project Code	Rubric	Initiator	Lot	Ref	Number	Revision
93M	0407	AAC	60L11	DWG	90225	A

Tekla structures

-Drawing shall be updated according to the comments on the GA drawing.
-Approval is subjected to the approval of coordination package between multi-discipline.

REVIEWED WITH COMMENT MONORAILS PROJECT

All holes are 22mm U.N.O Length & Area & Weight per piece

Mark	Profile	Grade	QTY	Length	Area	Weight
FP10	FLT20*400	S355J2N	4	991.4	0.82	58.1

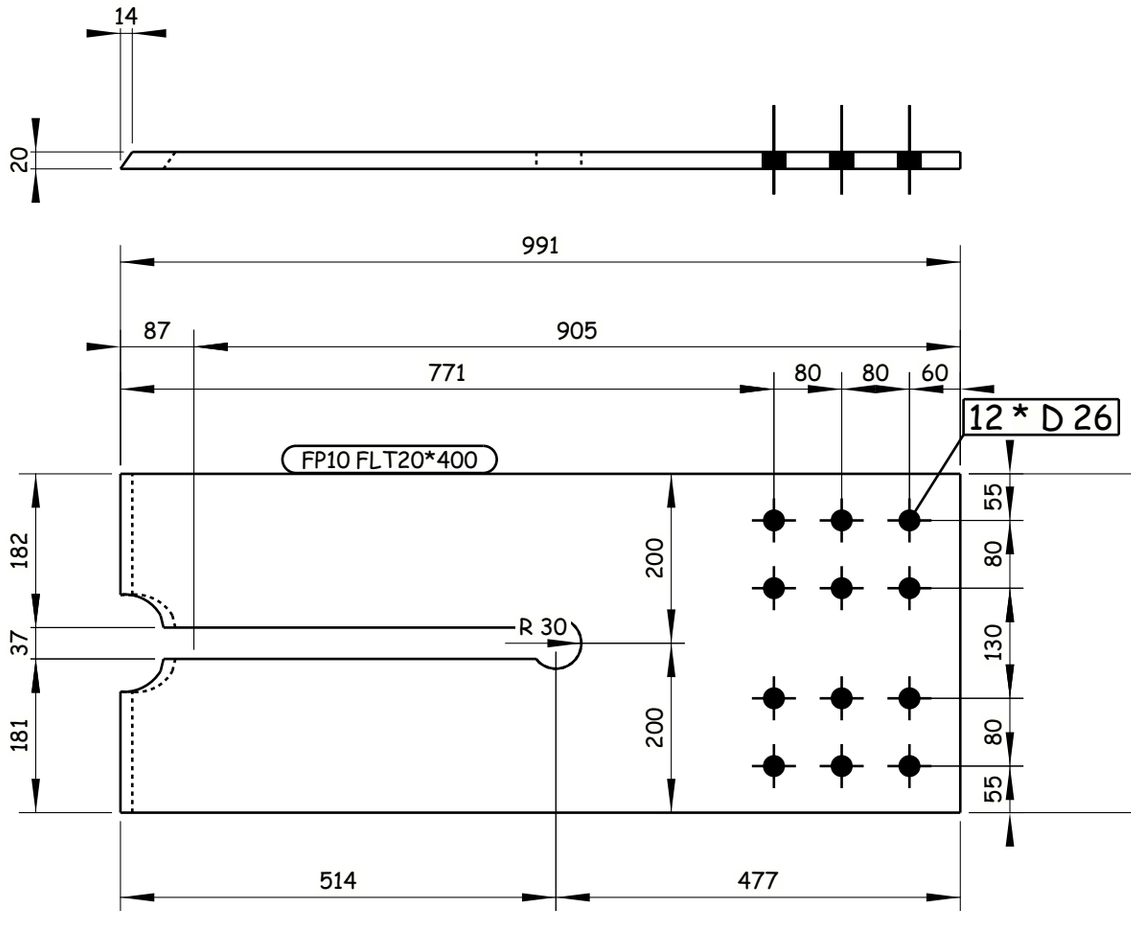

4 REQUIRED AS DRAWN E.SH FP10

6 October Monorail Engineering Unit
Valid For Construction

GENERAL NOTES:
1. ALL DIMENSIONS ARE IN MILLIMETERS UNLESS OTHERWISE SPECIFIED.
2. LEVELS ARE IN METERS
3. DESIGN SERVICE LIFE OF 100 YEARS.
4. FLANGES OF TOP AND BOTTOM CHORDS TO BE SUPPLIED WITH IMPROVED THROUGH THICKNESS PROPERTIES Z25 ACCORDING TO EN10164.

REFERENCE DRAWINGS

1	93M-0407-SEN-6OL11-END-10118-B PAGE 01:17
2	
3	
4	
5	
6	
7	
8	
9	
10	
11	

6TH OF OCTOBER CITY RAIL TRANSIT MONORAIL & NEW CAPITAL CITY RAIL TRANSIT MONORAIL

وزارة النقل MINISTRY OF TRANSPORT
The Authority
Hill International
Authority Consultant

ORASCOM CONSTRUCTION
BOMBARDIER
Main Contractor

SENER
SHAKER CONSULTANCY GROUP
Designer

CONTRACTOR CONSULTANT:
EHC
ENGINEERING HOUSE FOR CONSULTANCY

SCALE AS SHOWN	SHOP DRAWING	DATE 20.11.2024

REV	DATE	BY	DESCRIPTION	CHK	APD
A	20-11-24	E.SH	ISSUE FOR APPROVAL	A.SH	M.M

DRAWING TITLE:
6TH OF OCTOBER MONORAIL
SHOP DRAWING FOR BRIDGE 6OL11-37
STEEL TRUSS (II).
FP10

Project Code	Rubric	Initiator	Lot	Ref	Number	Revision
93M	0407	AAC	6OL11	DWG	90226	A

Tekla structures

-Drawing shall be updated according to the comments on the GA drawing.
-Approval is subjected to the approval of coordination package between multi-discipline.

REVIEWED WITH COMMENT
MONORAILS PROJECT

All holes are 22mm U.N.O Length & Area & Weight per piece

Mark	Profile	Grade	QTY	Length	Area	Weight
FP11	FLT30*400	S355J2N	4	4012.9	3.43	362.1

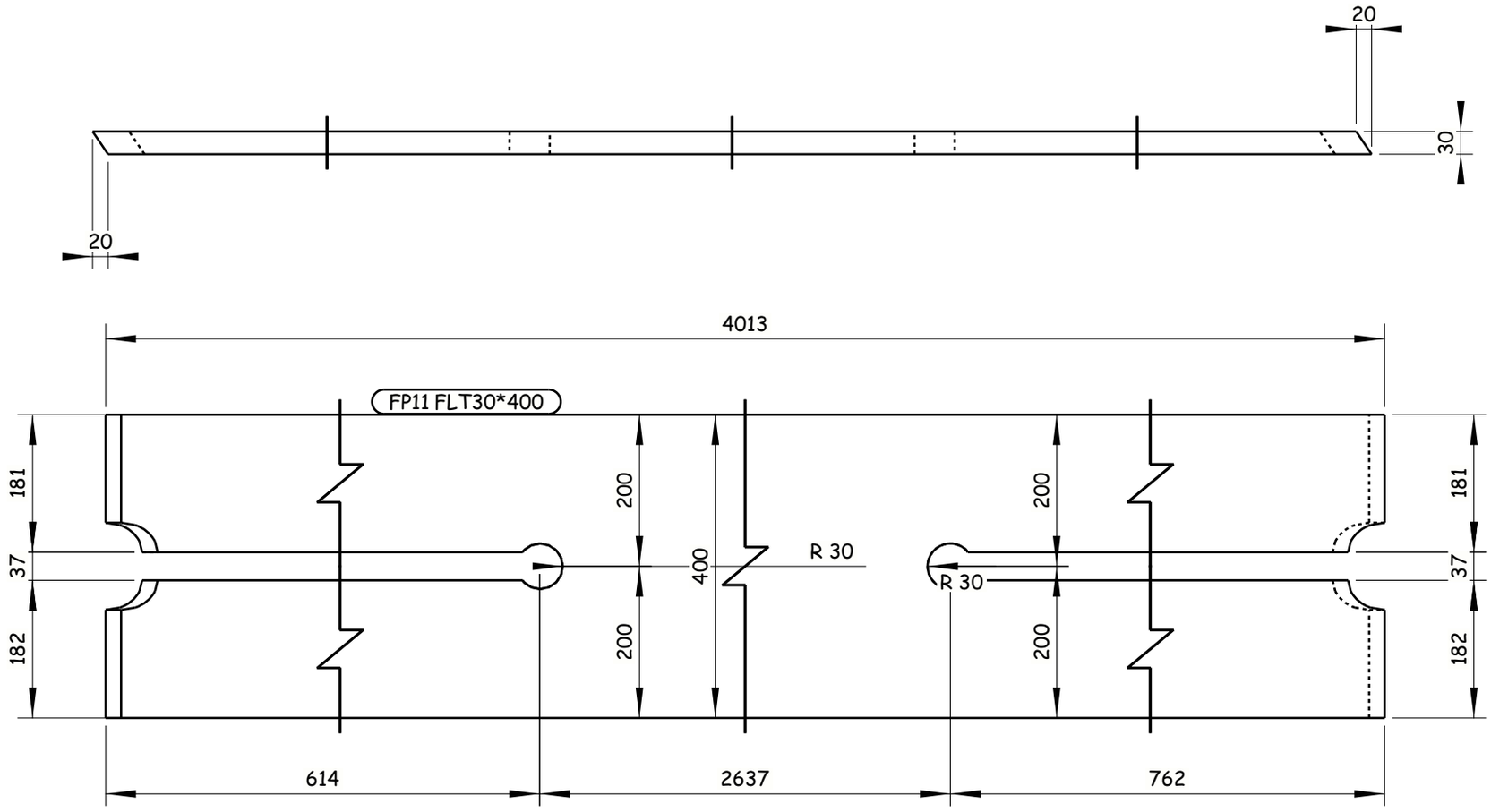

4 REQUIRED AS DRAWN E.SH FP11

6 October Monorail
Engineering Unit
Valid For Construction

GENERAL NOTES:

1. ALL DIMENSIONS ARE IN MILLIMETERS UNLESS OTHERWISE SPECIFIED.
2. LEVELS ARE IN METERS
3. DESIGN SERVICE LIFE OF 100 YEARS.
4. FLANGES OF TOP AND BOTTOM CHORDS TO BE SUPPLIED WITH IMPROVED THROUGH THICKNESS PROPERTIES Z25 ACCORDING TO EN10164.

REFERENCE DRAWINGS

1	93M-0407-SEN-6OL11-END-10118-B PAGE 01:17
2	
3	
4	
5	
6	
7	
8	
9	
10	
11	

6TH OF OCTOBER CITY RAIL TRANSIT MONORAIL &
NEW CAPITAL CITY RAIL TRANSIT MONORAIL

The Authority
Hill International
Authority Consultant

Main Contractor

Designer

CONTRACTOR CONSULTANT:
ENGINEERING HOUSE FOR CONSULTANCY

SCALE: AS SHOWN | CHD DRAWING | DATE: 20.11.2024

REV	DATE	BY	DESCRIPTION	CHK	APD
A	20-11-24	E.SH	ISSUE FOR APPROVAL	A.SH	M.M

DRAWING TITLE:
6TH OF OCTOBER MONORAIL
SHOP DRAWING FOR BRIDGE 6OL11-37
STEEL TRUSS (II).
FP11

Project Code	Rubric	Initiator	Lot	Ref	Number	Revision
9 3 M	0 4 0 7	A A C	6 0 L 1 1	D W G	90227	A

Tekla structures

-Drawing shall be updated according to the comments on the GA drawing.
-Approval is subjected to the approval of coordination package between multi-discipline.

REVIEWED WITH COMMENT
MONORAILS PROJECT

All holes are 22mm U.N.O Length & Area & Weight per piece

Mark	Profile	Grade	QTY	Length	Area	Weight
FP12	FLT30*400	S355J2N	4	4012.7	3.43	362.0

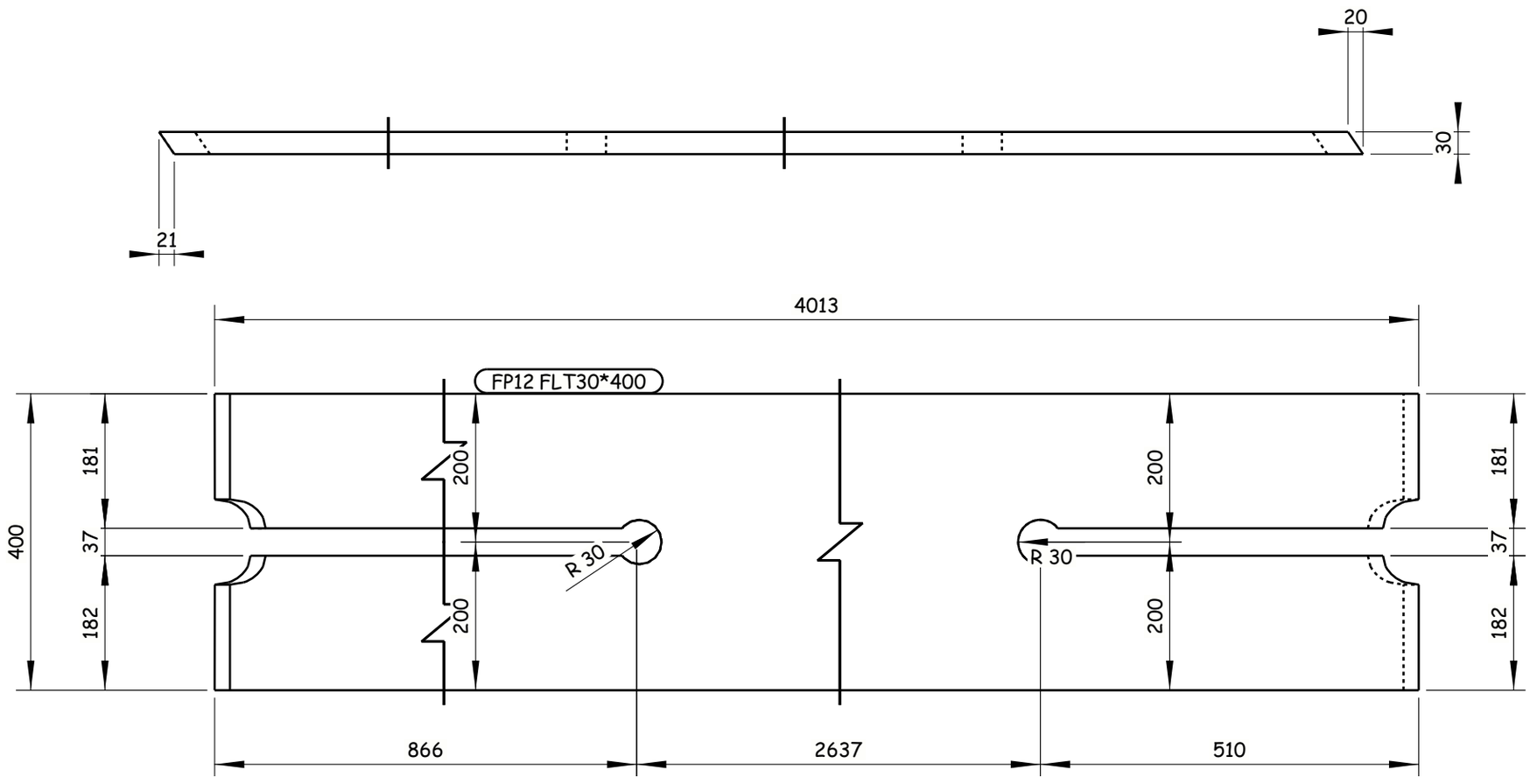

4 REQUIRED AS DRAWN E.SH FP12

GENERAL NOTES:

1. ALL DIMENSIONS ARE IN MILLIMETERS UNLESS OTHERWISE SPECIFIED.
2. LEVELS ARE IN METERS
3. DESIGN SERVICE LIFE OF 100 YEARS.
4. FLANGES OF TOP AND BOTTOM CHORDS TO BE SUPPLIED WITH IMPROVED THROUGH THICKNESS PROPERTIES Z25 ACCORDING TO EN10164.

REFERENCE DRAWINGS

1	93M-0407-SEN-6OL11-END-10118-B PAGE 01:17
2	
3	
4	
5	
6	
7	
8	
9	
10	
11	

6TH OF OCTOBER CITY RAIL TRANSIT MONORAIL &
NEW CAPITAL CITY RAIL TRANSIT MONORAIL

The Authority
Hill International
Authority Consultant

Main Contractor

Designer

CONTRACTOR CONSULTANT :
ENGINEERING HOUSE FOR CONSULTANCY

SCALE: AS SHOWN | SHOP DRAWING | DATE: 20.11.2024

REV	DATE	BY	DESCRIPTION	CHK	APD
A	20-11-24	E.SH	ISSUE FOR APPROVAL	A.SH	M.M

6 October Monorail
Engineering Unit
Valid For Construction

DRAWING TITLE:
6TH OF OCTOBER MONORAIL
SHOP DRAWING FOR BRIDGE 6OL11-37
STEEL TRUSS (II).
FP12

Project Code	Rubric	Initiator	Lot	Ref	Number	Revision
9 3 M 0	4 0 7	A A C	6 0 L 1 1	D W G	90228	A

Tekla structures

-Drawing shall be updated according to the comments on the GA drawing.
-Approval is subjected to the approval of coordination package between multi-discipline.

REVIEWED WITH COMMENT
MONORAILS PROJECT

All holes are 22mm U.N.O Length & Area & Weight per piece

Mark	Profile	Grade	QTY	Length	Area	Weight
FP13	FLT35*400	S355J2N	4	4062.8	3.52	427.5

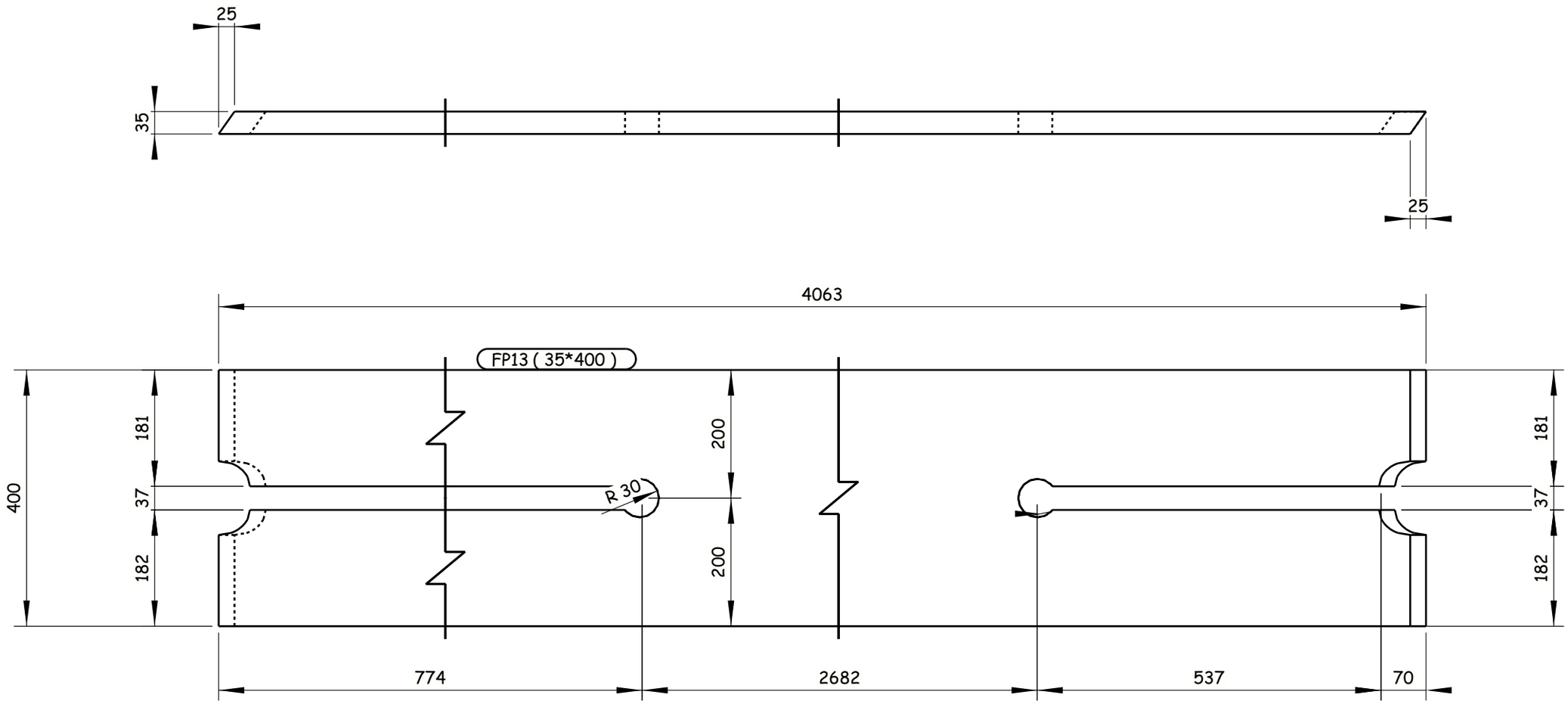

4 REQUIRED AS DRAWN E.SH FP13

6 October Monorail
Engineering Unit
Valid For Construction

GENERAL NOTES:

1. ALL DIMENSIONS ARE IN MILLIMETERS UNLESS OTHERWISE SPECIFIED.
2. LEVELS ARE IN METERS
3. DESIGN SERVICE LIFE OF 100 YEARS.
4. FLANGES OF TOP AND BOTTOM CHORDS TO BE SUPPLIED WITH IMPROVED THROUGH THICKNESS PROPERTIES Z25 ACCORDING TO EN10164.

REFERENCE DRAWINGS

1	93M-0407-SEN-6OL11-END-10118-B PAGE 01:17
2	
3	
4	
5	
6	
7	
8	
9	
10	
11	

6TH OF OCTOBER CITY RAIL TRANSIT MONORAIL &
NEW CAPITAL CITY RAIL TRANSIT MONORAIL

The Authority
Hill International
Authority Consultant

ORASCOM CONSTRUCTION
Main Contractor

BOMBARDIER
SENER
SHAKER CONSULTANCY GROUP
Designer

CONTRACTOR & CONSULTANT:
ENGINEERING HOUSE FOR CONSULTANCY

SCALE	SHD/DRAWING	DATE
AS SHOWN		20.11.2024

REV.	DATE	BY	DESCRIPTION	CHK	APD
A	20-11-24	E.SH	ISSUE FOR APPROVAL	A.SH	M.M

DRAWING TITLE:
6TH OF OCTOBER MONORAIL
SHOP DRAWING FOR BRIDGE 6OL11-37
STEEL TRUSS (II).
FP13

Project Code	Rubric	Initiator	Lot	Ref	Number	Revision
93M	407	AAC	60L11	DWG	90229	A

Tekla structures

-Drawing shall be updated according to the comments on the GA drawing.
-Approval is subjected to the approval of coordination package between multi-discipline.

REVIEWED WITH COMMENT
MONORAILS PROJECT

All holes are 22mm U.N.O Length & Area & Weight per piece

Mark	Profile	Grade	QTY	Length	Area	Weight
FP14	FLT35*400	S355J2N	2	4062.5	3.52	427.5

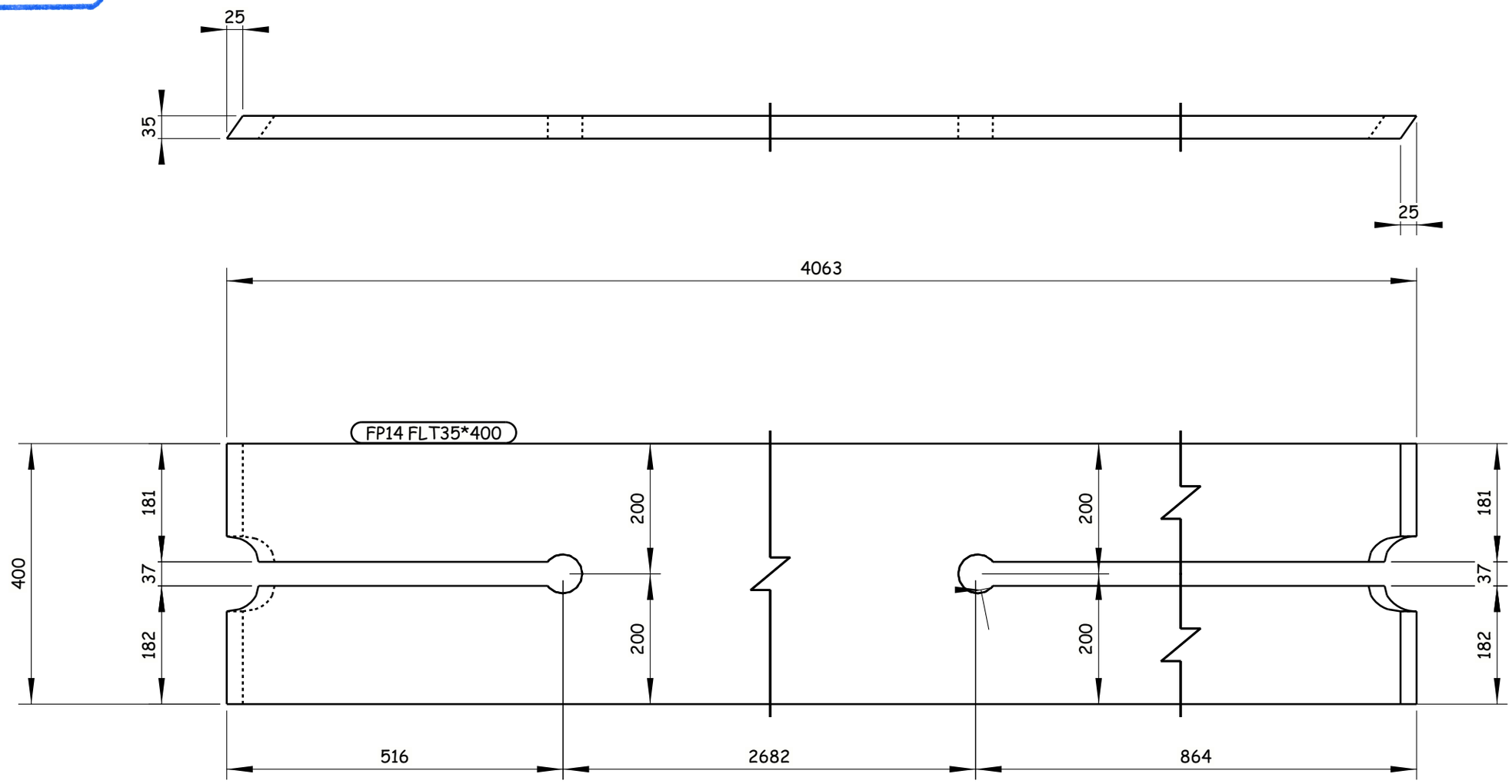

2 REQUIRED AS DRAWN E.SH FP14

6 October Monorail
Engineering Unit
Valid For Construction

GENERAL NOTES:

1. ALL DIMENSIONS ARE IN MILLIMETERS UNLESS OTHERWISE SPECIFIED.
2. LEVELS ARE IN METERS
3. DESIGN SERVICE LIFE OF 100 YEARS.
4. FLANGES OF TOP AND BOTTOM CHORDS TO BE SUPPLIED WITH IMPROVED THROUGH THICKNESS PROPERTIES Z25 ACCORDING TO EN10164.

REFERENCE DRAWINGS

1	93M-0407-SEN-6OL11-END-10118-B PAGE 01:17
2	
3	
4	
5	
6	
7	
8	
9	
10	
11	

6TH OF OCTOBER CITY RAIL TRANSIT MONORAIL &
NEW CAPITAL CITY RAIL TRANSIT MONORAIL

The Authority
Hill International
Authority Consultant

Main Contractor

Designer

CONTRACTOR CONSULTANT :
ENGINEERING HOUSE FOR CONSULTANCY

SCALE: AS SHOWN | SHOP DRAWING | DATE: 20.11.2024

REV	DATE	BY	DESCRIPTION	CHK	APD
A	20-11-24	E.SH	ISSUE FOR APPROVAL	A.SH	M.M

DRAWING TITLE:
6TH OF OCTOBER MONORAIL
SHOP DRAWING FOR BRIDGE 6OL11-37
STEEL TRUSS (II).
FP14

Project Code	Rubric	Initiator	Lot	Ref	Number	Revision
93M	0407	AAC	60L11	DWG	90230	A

Tekla structures

-Drawing shall be updated according to the comments on the GA drawing.
-Approval is subjected to the approval of coordination package between multi-discipline.

REVIEWED WITH COMMENT
MONORAILS PROJECT

All holes are 22mm U.N.O Length & Area & Weight per piece

Mark	Profile	Grade	QTY	Length	Area	Weight
FP15	FLT30*400	S355J2N	2	4018.0	3.43	362.6

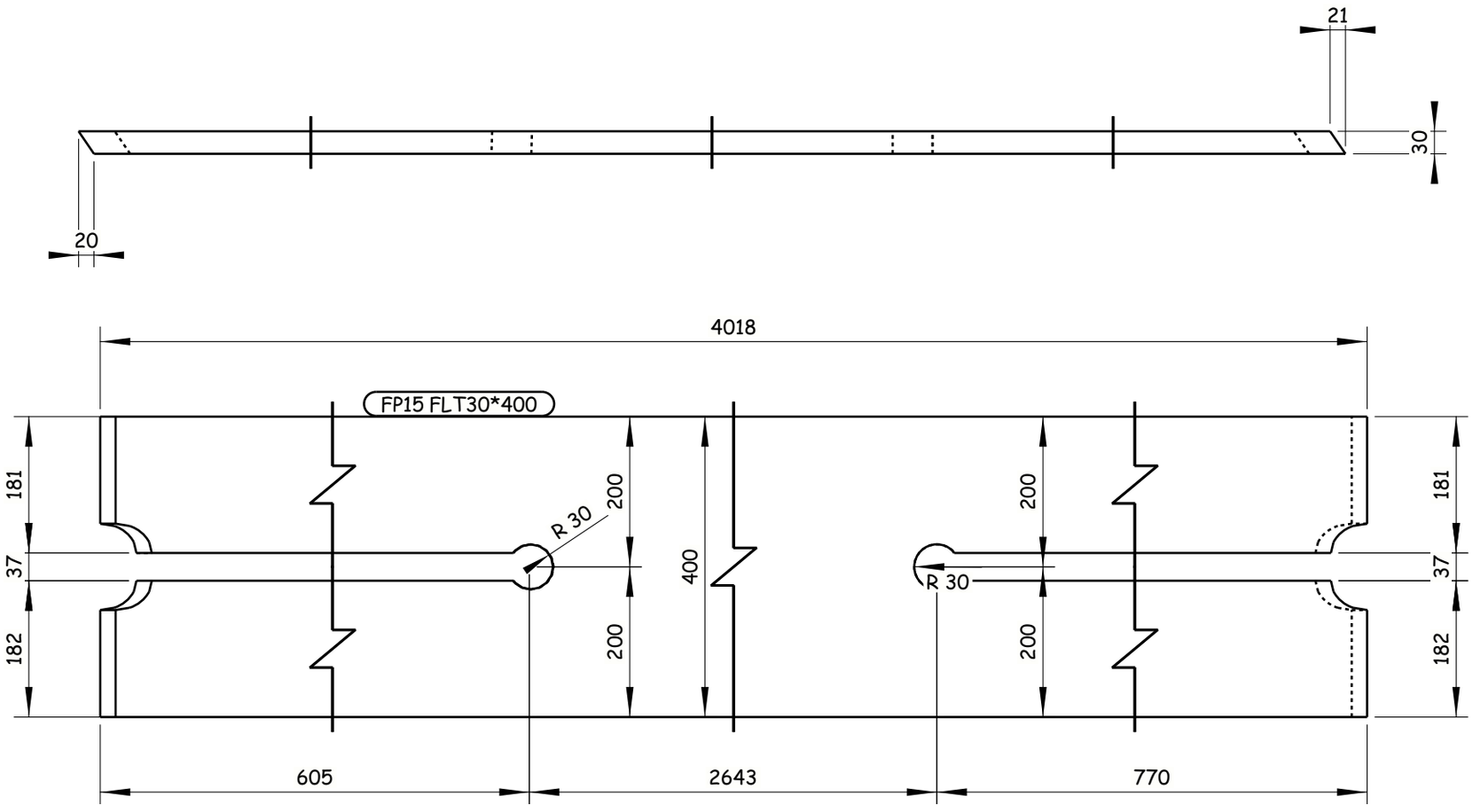

2 REQUIRED AS DRAWN E.SH FP15

GENERAL NOTES:

1. ALL DIMENSIONS ARE IN MILLIMETERS UNLESS OTHERWISE SPECIFIED.
2. LEVELS ARE IN METERS
3. DESIGN SERVICE LIFE OF 100 YEARS.
4. FLANGES OF TOP AND BOTTOM CHORDS TO BE SUPPLIED WITH IMPROVED THROUGH THICKNESS PROPERTIES Z25 ACCORDING TO EN10164.

REFERENCE DRAWINGS

1	93M-0407-SEN-6OL11-END-10118-B PAGE 01:17
2	
3	
4	
5	
6	
7	
8	
9	
10	
11	

6TH OF OCTOBER CITY RAIL TRANSIT MONORAIL &
NEW CAPITAL CITY RAIL TRANSIT MONORAIL

The Authority
Hill International
Authority Consultant

ORASCOM CONSTRUCTION
BOMBARDIER
Main Contractor

SENER
SHAKER CONSULTANCY GROUP
Designer

CONTRACTOR:
CONSULTANT:
ENGINEERING HOUSE FOR CONSULTANCY

REV	DATE	BY	DESCRIPTION	CHK	APD
A	20-11-24	E.SH	ISSUE FOR APPROVAL	A.SH	M.M

SCALE: AS SHOWN | CHD DRAWING | DATE: 20.11.2024

6 October Monorail
Engineering Unit
Valid For Construction

DRAWING TITLE:
6TH OF OCTOBER MONORAIL
SHOP DRAWING FOR BRIDGE 6OL11-37
STEEL TRUSS (II).
FP15

Project Code	Rubric	Initiator	Lot	Ref	Number	Revision
9 3 M	0 4 0 7	A A C	6 0 L 1 1	D W G	90231	A

Tekla structures

-Drawing shall be updated according to the comments on the GA drawing.
-Approval is subjected to the approval of coordination package between multi-discipline.

REVIEWED WITH COMMENT
MONORAILS PROJECT

All holes are 22mm U.N.O Length & Area & Weight per piece

Mark	Profile	Grade	QTY	Length	Area	Weight
FP16	FLT30*400	S355J2N	2	4016.9	3.43	362.4

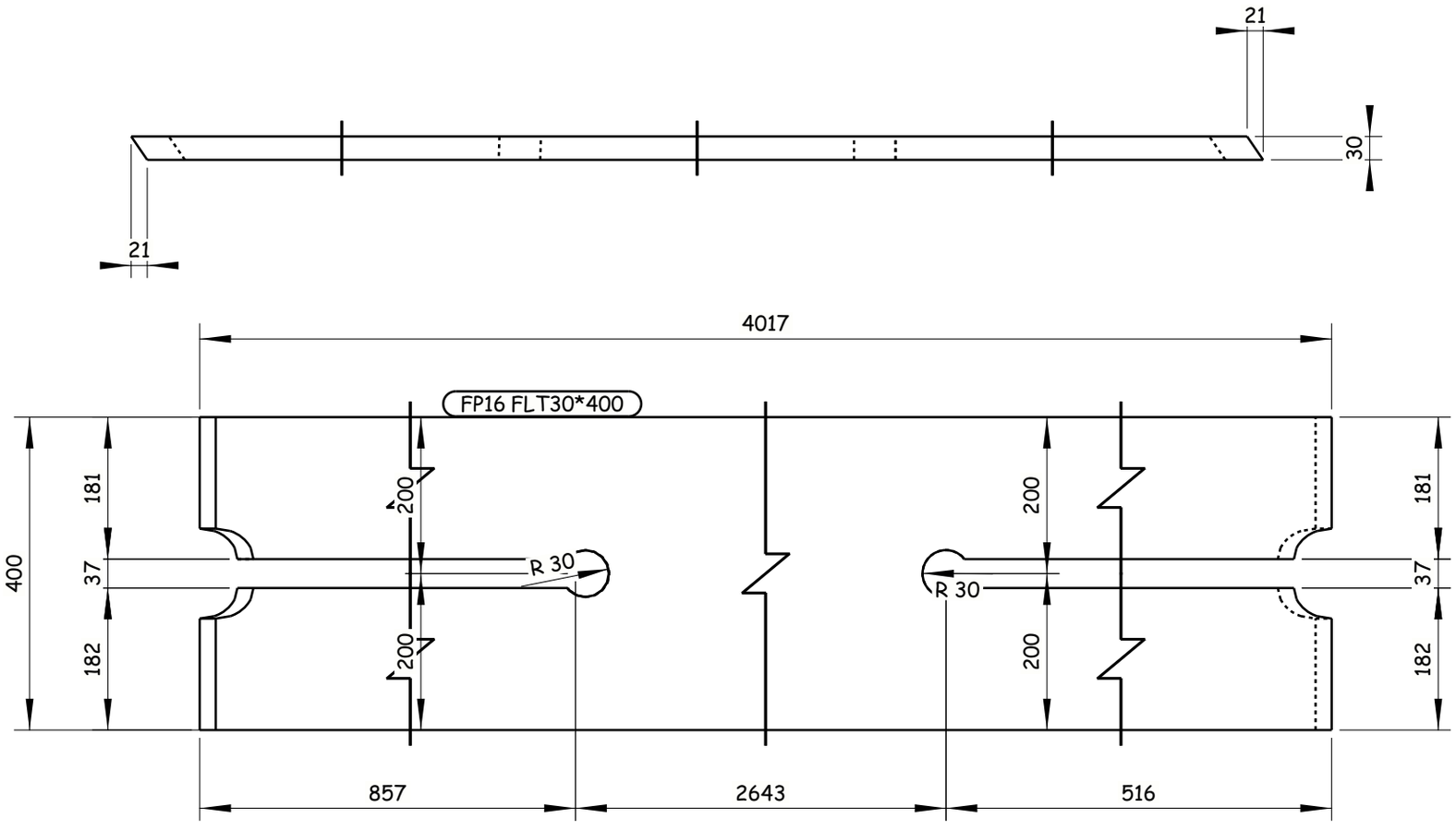

2 REQUIRED AS DRAWN E.SH FP16

6 October Monorail
Engineering Unit
Valid For Construction

GENERAL NOTES:

1. ALL DIMENSIONS ARE IN MILLIMETERS UNLESS OTHERWISE SPECIFIED.
2. LEVELS ARE IN METERS
3. DESIGN SERVICE LIFE OF 100 YEARS.
4. FLANGES OF TOP AND BOTTOM CHORDS TO BE SUPPLIED WITH IMPROVED THROUGH THICKNESS PROPERTIES Z25 ACCORDING TO EN10164.

REFERENCE DRAWINGS

1	93M-0407-SEN-6OL11-END-10118-B PAGE 01:17
2	
3	
4	
5	
6	
7	
8	
9	
10	
11	

6TH OF OCTOBER CITY RAIL TRANSIT MONORAIL &
NEW CAPITAL CITY RAIL TRANSIT MONORAIL

The Authority
Hill International
Authority Consultant

ORASCOM CONSTRUCTION
Main Contractor

BOMBARDIER
SENER
SHAKER
Designer

CONTRACTOR & CONSULTANT:
ENGINEERING HOUSE FOR CONSULTANCY

SCALE: AS SHOWN | CHK'D DRAWING | DATE: 20.11.2024

REV	DATE	BY	DESCRIPTION	CHK	APD
A	20-11-24	E.SH	ISSUE FOR APPROVAL	A.SH	M.M

DRAWING TITLE:
6TH OF OCTOBER MONORAIL
SHOP DRAWING FOR BRIDGE 6OL11-37
STEEL TRUSS (II).
FP16

Project Code	Rubric	Initiator	Lot	Ref	Number	Revision
93M	0407	AAC	60L11	DWG	90232	A

Tekla structures

-Drawing shall be updated according to the comments on the GA drawing.
-Approval is subjected to the approval of coordination package between multi-discipline.

REVIEWED WITH COMMENT
MONORAILS PROJECT

All holes are 22mm U.N.O Length & Area & Weight per piece

Mark	Profile	Grade	QTY	Length	Area	Weight
FP17	FLT30*400	S355J2N	4	4053.4	3.46	366.0

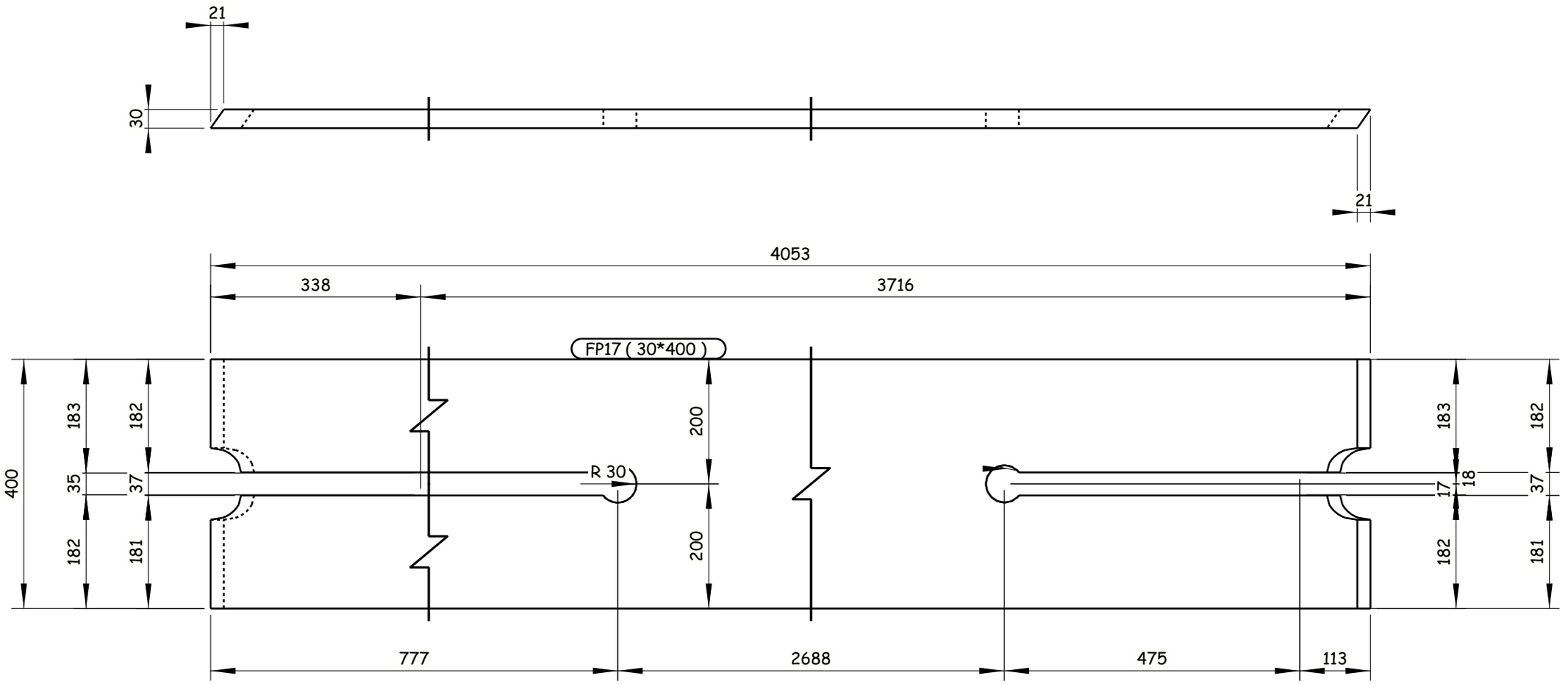

4 REQUIRED AS DRAWN E.SH FP17

6 October Monorail
Engineering Unit
Valid For Construction

GENERAL NOTES:

1. ALL DIMENSIONS ARE IN MILLIMETERS UNLESS OTHERWISE SPECIFIED.
2. LEVELS ARE IN METERS
3. DESIGN SERVICE LIFE OF 100 YEARS.
4. FLANGES OF TOP AND BOTTOM CHORDS TO BE SUPPLIED WITH IMPROVED THROUGH THICKNESS PROPERTIES Z25 ACCORDING TO EN10164.

REFERENCE DRAWINGS

1	93M-0407-SEN-6OL11-END-10118-B PAGE 01:17
2	
3	
4	
5	
6	
7	
8	
9	
10	
11	

6TH OF OCTOBER CITY RAIL TRANSIT MONORAIL &
NEW CAPITAL CITY RAIL TRANSIT MONORAIL

The Authority — Hill International Authority Consultant
Main Contractor
Designer

CONTRACTOR CONSULTANT:
ENGINEERING HOUSE FOR CONSULTANCY

SCALE: AS SHOWN | SHOP DRAWING | DATE: 20.11.2024

DRAWING TITLE:
6TH OF OCTOBER MONORAIL
SHOP DRAWING FOR BRIDGE 6OL11-37
STEEL TRUSS (II).
FP17

REV	DATE	BY	DESCRIPTION	CHK	APD
A	20-11-24	E.SH	ISSUE FOR APPROVAL	A.SH	M.M

Project Code	Rubric	Initiator	Lot	Ref	Number	Revision
93M	407	AAC	60L11	DWG	90233	A

Tekla structures

-Drawing shall be updated according to the comments on the GA drawing.
-Approval is subjected to the approval of coordination package between multi-discipline.

REVIEWED WITH COMMENT
MONORAILS PROJECT

All holes are 22mm U.N.O Length & Area & Weight per piece

Mark	Profile	Grade	QTY	Length	Area	Weight
FP18	FLT30*400	S355J2N	2	4052.5	3.46	365.9

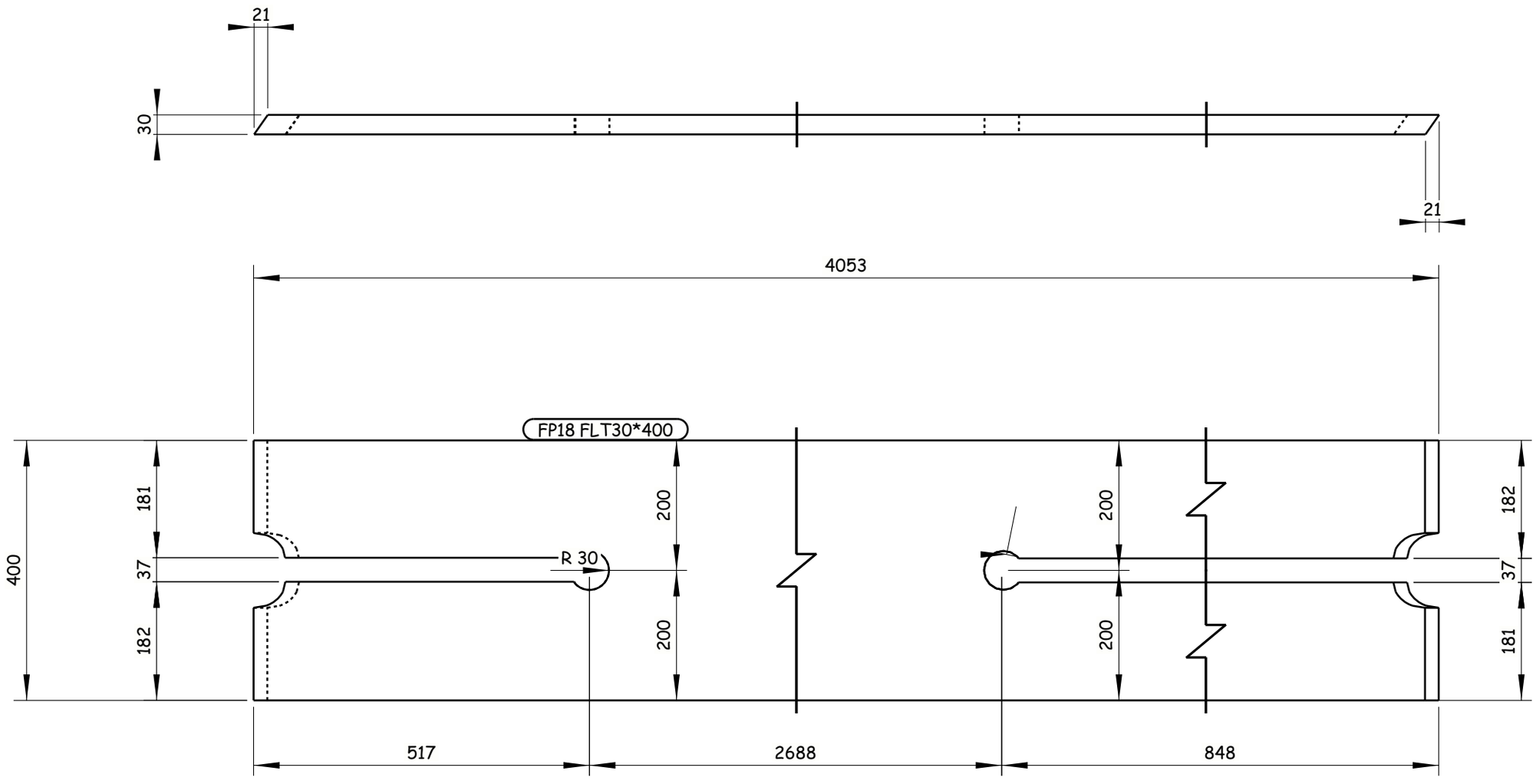

2 REQUIRED AS DRAWN E.SH FP18

6 October: Monorail
Engineering Unit
Valid For Cönstruction

GENERAL NOTES:
1. ALL DIMENSIONS ARE IN MILLIMETERS UNLESS OTHERWISE SPECIFIED.
2. LEVELS ARE IN METERS
3. DESIGN SERVICE LIFE OF 100 YEARS.
4. FLANGES OF TOP AND BOTTOM CHORDS TO BE SUPPLIED WITH IMPROVED THROUGH THICKNESS PROPERTIES Z25 ACCORDING TO EN10164.

REFERENCE DRAWINGS

1	93M-0407-SEN-6OL11-END-10118-B PAGE 01:17
2	
3	
4	
5	
6	
7	
8	
9	
10	
11	

6TH OF OCTOBER CITY RAIL TRANSIT MONORAIL &
NEW CAPITAL CITY RAIL TRANSIT MONORAIL

The Authority
Hill International
Authority Consultant
Main Contractor
Designer

CONTRACTOR & CONSULTANT:
ENGINEERING HOUSE FOR CONSULTANCY

SCALE: AS SHOWN | CHK'D DRWING | DATE: 20.11.2024

REV	DATE	BY	DESCRIPTION	CHK	APD
A	20-11-24	E.SH	ISSUE FOR APPROVAL	A.SH	M.M

DRAWING TITLE:
6TH OF OCTOBER MONORAIL
SHOP DRAWING FOR BRIDGE 6OL11-37
STEEL TRUSS (II).
FP18

Project Code	Rubric	Initiator	Lot	Ref	Number	Revision
9 3 M	0 4 0 7	A A C	6 0 L 1 1	D W G	90234	A

Tekla structures

-Drawing shall be updated according to the comments on the GA drawing.
-Approval is subjected to the approval of coordination package between multi-discipline.

REVIEWED WITH COMMENT
MONORAILS PROJECT

All holes are 22mm U.N.O Length & Area & Weight per piece

Mark	Profile	Grade	QTY	Length	Area	Weight
FP19	FLT20*400	S355J2N	3	4018.8	3.32	242.1

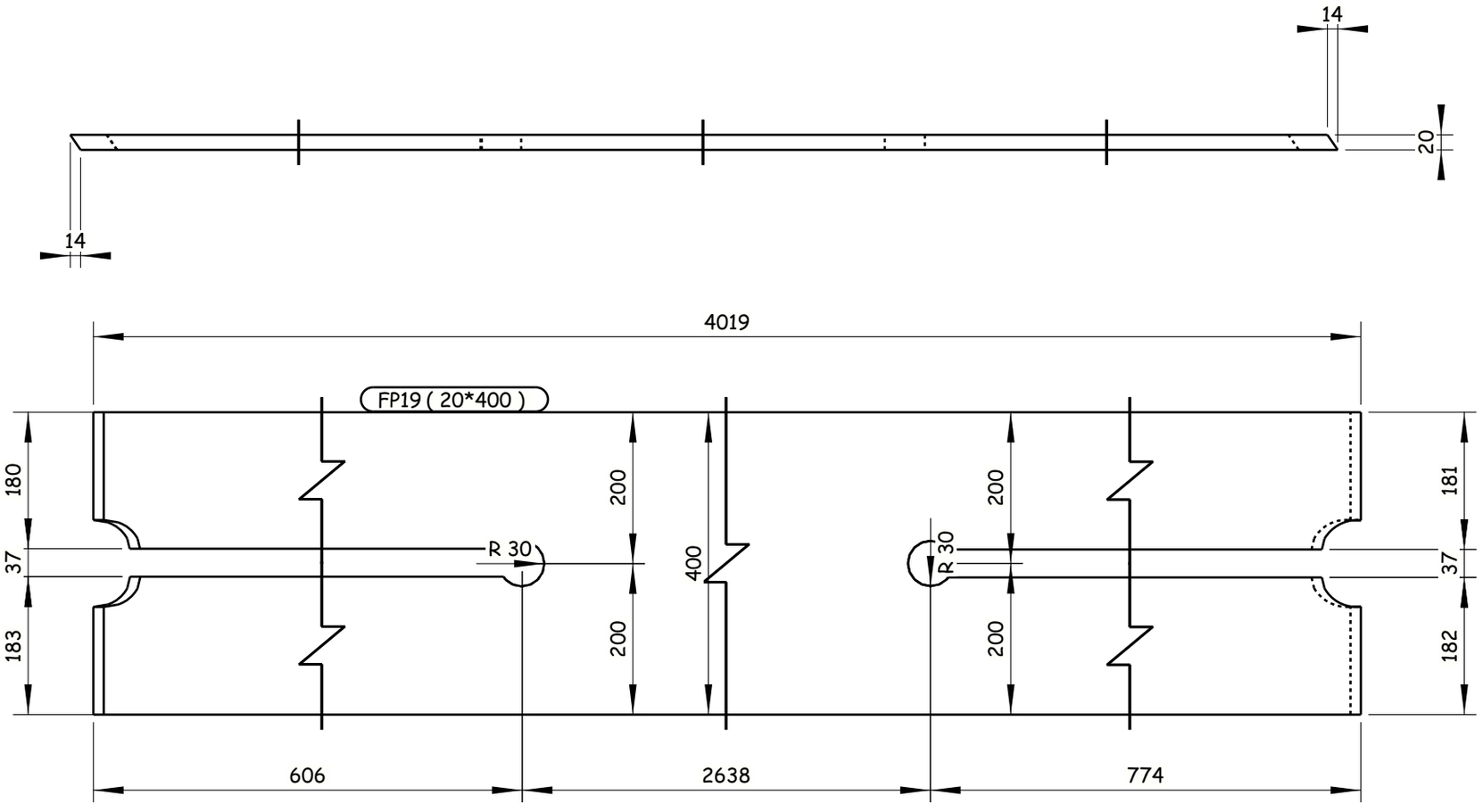

3 REQUIRED AS DRAWN E.SH FP19

6 October Monorail
Engineering Unit
Valid For Construction

GENERAL NOTES:

1. ALL DIMENSIONS ARE IN MILLIMETERS UNLESS OTHERWISE SPECIFIED.
2. LEVELS ARE IN METERS
3. DESIGN SERVICE LIFE OF 100 YEARS.
4. FLANGES OF TOP AND BOTTOM CHORDS TO BE SUPPLIED WITH IMPROVED THROUGH THICKNESS PROPERTIES Z25 ACCORDING TO EN10164.

REFERENCE DRAWINGS

1	93M-0407-SEN-6OL11-END-10118-B PAGE 01:17
2	
3	
4	
5	
6	
7	
8	
9	
10	
11	

6TH OF OCTOBER CITY RAIL TRANSIT MONORAIL &
NEW CAPITAL CITY RAIL TRANSIT MONORAIL

The Authority
Hill International
Authority Consultant

Main Contractor

Designer

CONTRACTOR / CONSULTANT :
ENGINEERING HOUSE FOR CONSULTANCY

SCALE: AS SHOWN | CHD DRAWING | DATE: 20.11.2024

REV	DATE	BY	DESCRIPTION	CHK	APD
A	20-11-24	E.SH	ISSUE FOR APPROVAL	A.SH	M.M

DRAWING TITLE:
6TH OF OCTOBER MONORAIL
SHOP DRAWING FOR BRIDGE 6OL11-37
STEEL TRUSS (II).
FP19

Project Code	Rubric	Initiator	Lot	Ref	Number	Revision
93M	0407	AAC	60L11	DWG	90235	A

Tekla structures

-Drawing shall be updated according to the comments on the GA drawing.
-Approval is subjected to the approval of coordination package between multi-discipline.

REVIEWED WITH COMMENT
MONORAILS PROJECT

All holes are 22mm U.N.O Length & Area & Weight per piece

Mark	Profile	Grade	QTY	Length	Area	Weight
FP20	FLT20*400	S355J2N	3	4018.8	3.32	242.1

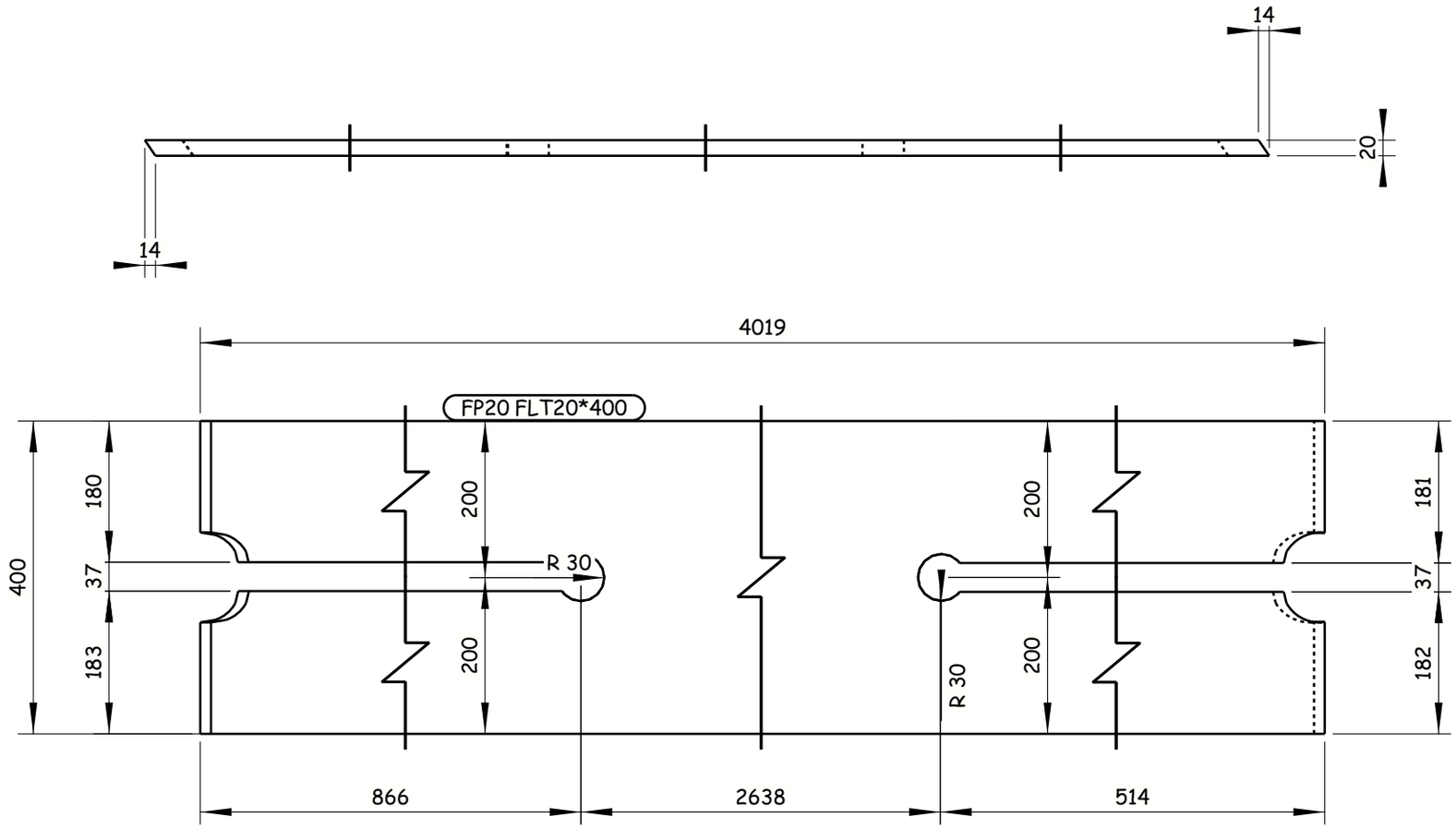

3 REQUIRED AS DRAWN E.SH FP20

6 October Monorail
Engineering Unit
Valid For Construction

GENERAL NOTES:

1. ALL DIMENSIONS ARE IN MILLIMETERS UNLESS OTHERWISE SPECIFIED.
2. LEVELS ARE IN METERS
3. DESIGN SERVICE LIFE OF 100 YEARS.
4. FLANGES OF TOP AND BOTTOM CHORDS TO BE SUPPLIED WITH IMPROVED THROUGH THICKNESS PROPERTIES Z25 ACCORDING TO EN10164.

REFERENCE DRAWINGS

1	93M-0407-SEN-6OL11-END-10118-B PAGE 01:17
2	
3	
4	
5	
6	
7	
8	
9	
10	
11	

6TH OF OCTOBER CITY RAIL TRANSIT MONORAIL &
NEW CAPITAL CITY RAIL TRANSIT MONORAIL

The Authority
Hill International
Authority Consultant

ORASCOM CONSTRUCTION
BOMBARDIER
Main Contractor

SENER
SHAKER CONSULTANCY GROUP
Designer

CONTRACTOR & CONSULTANT:
ENGINEERING HOUSE FOR CONSULTANCY

SCALE: AS SHOWN | SHD DRAWING | DATE: 20.11.2024

DRAWING TITLE:
6TH OF OCTOBER MONORAIL
SHOP DRAWING FOR BRIDGE 6OL11-37
STEEL TRUSS (II).
FP20

REV.	DATE	BY	DESCRIPTION	CHK	APD
A	20-11-24	E.SH	ISSUE FOR APPROVAL	A.SH	M.M

Project Code	Rubric	Initiator	Lot	Ref	Number	Revision
93M	0407	AAC	60L11	DWG	90236	A

Tekla structures

-Drawing shall be updated according to the comments on the GA drawing.
-Approval is subjected to the approval of coordination package between multi-discipline.

REVIEWED WITH COMMENT
MONORAILS PROJECT

All holes are 22mm U.N.O Length & Area & Weight per piece

Mark	Profile	Grade	QTY	Length	Area	Weight
FP21	FLT30*400	S355J2N	2	4048.5	3.46	365.4

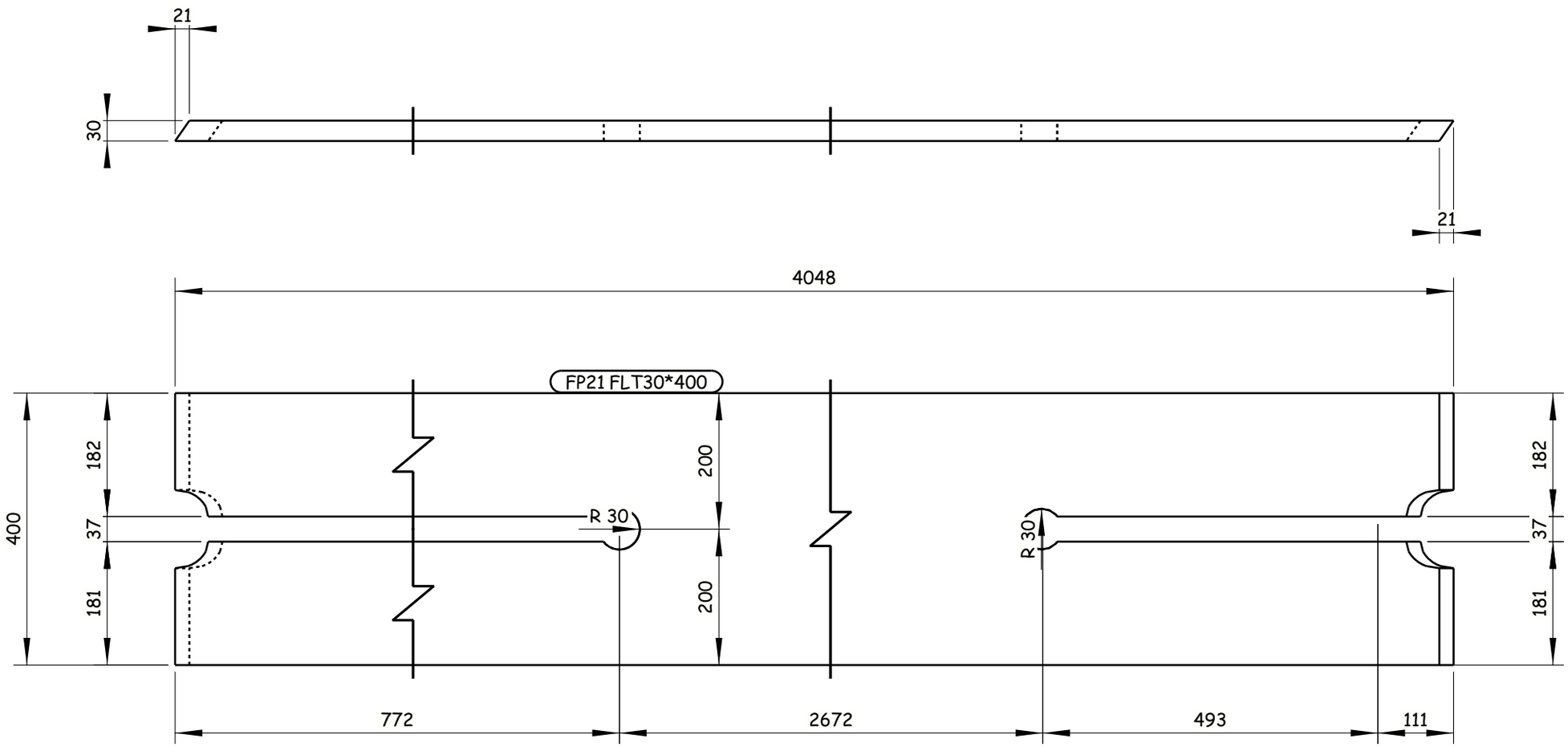

2 REQUIRED AS DRAWN E.SH FP21

6 October Monorail
Engineering Unit
Valid For Construction

GENERAL NOTES:
1. ALL DIMENSIONS ARE IN MILLIMETERS UNLESS OTHERWISE SPECIFIED.
2. LEVELS ARE IN METERS
3. DESIGN SERVICE LIFE OF 100 YEARS.
4. FLANGES OF TOP AND BOTTOM CHORDS TO BE SUPPLIED WITH IMPROVED THROUGH THICKNESS PROPERTIES Z25 ACCORDING TO EN10164.

REFERENCE DRAWINGS

1	93M-0407-SEN-6OL11-END-10118-B PAGE 01:17
2	
3	
4	
5	
6	
7	
8	
9	
10	
11	

6TH OF OCTOBER CITY RAIL TRANSIT MONORAIL &
NEW CAPITAL CITY RAIL TRANSIT MONORAIL

The Authority
Hill International
Authority Consultant

ORASCOM CONSTRUCTION
Main Contractor

BOMBARDIER
SENER
SHAKER CONSULTANCY GROUP
Designer

CONTRACTOR:
CONSULTANT:
ENGINEERING HOUSE FOR CONSULTANCY

REV	DATE	BY	DESCRIPTION	CHK	APD
A	20-11-24	E.SH	ISSUE FOR APPROVAL	A.SH	M.M

SCALE: AS SHOWN | SHD DRAWING | DATE: 20.11.2024

DRAWING TITLE:
6TH OF OCTOBER MONORAIL
SHOP DRAWING FOR BRIDGE 6OL11-37
STEEL TRUSS (II).
FP21

Project Code	Rubric	Initiator	Lot	Ref	Number	Revision
93M	04	07	AAC60L11	DWG	90237	A

Tekla structures

-Drawing shall be updated according to the comments on the GA drawing.
-Approval is subjected to the approval of coordination package between multi-discipline.

REVIEWED WITH COMMENT
MONORAILS PROJECT

All holes are 22mm U.N.O Length & Area & Weight per piece

Mark	Profile	Grade	QTY	Length	Area	Weight
FP22	FLT30*400	S355J2N	2	4047.8	3.46	365.3

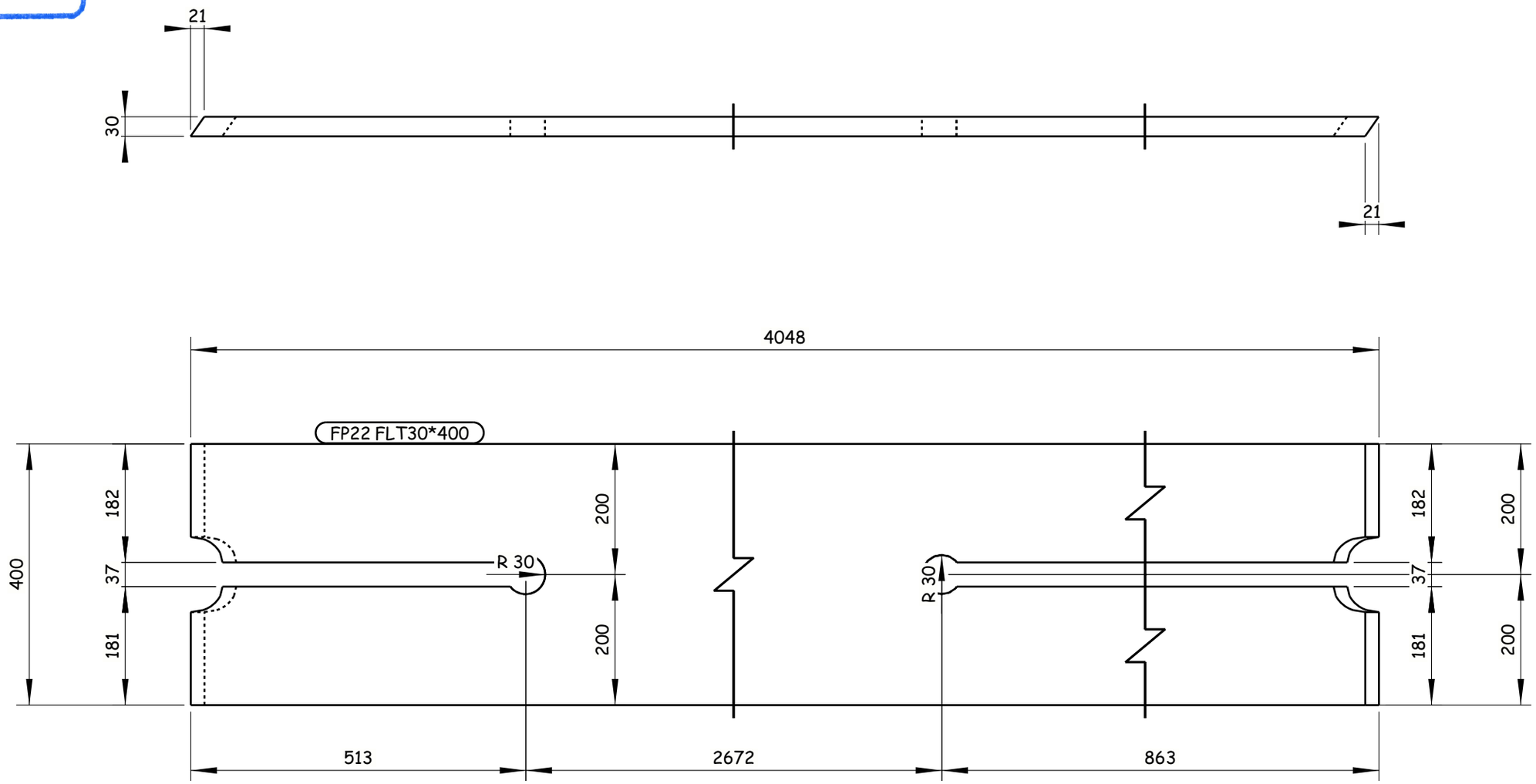

2 REQUIRED AS DRAWN E.SH FP22

6 October Monorail
Engineering Unit
Valid For Construction

GENERAL NOTES:
1. ALL DIMENSIONS ARE IN MILLIMETERS UNLESS OTHERWISE SPECIFIED.
2. LEVELS ARE IN METERS
3. DESIGN SERVICE LIFE OF 100 YEARS.
4. FLANGES OF TOP AND BOTTOM CHORDS TO BE SUPPLIED WITH IMPROVED THROUGH THICKNESS PROPERTIES Z25 ACCORDING TO EN10164.

REFERENCE DRAWINGS

1	93M-0407-SEN-6OL11-END-10118-B PAGE 01:17
2	
3	
4	
5	
6	
7	
8	
9	
10	
11	

6TH OF OCTOBER CITY RAIL TRANSIT MONORAIL &
NEW CAPITAL CITY RAIL TRANSIT MONORAIL

The Authority — Hill International Authority Consultant
Main Contractor: ORASCOM CONSTRUCTION
Designer: SENER / SHAKER CONSULTANCY GROUP
BOMBARDIER

CONTRACTOR/ CONSULTANT: EHC ENGINEERING HOUSE FOR CONSULTANCY

SCALE: AS SHOWN | SHOP DRAWING | DATE: 20.11.2024

REV	DATE	BY	DESCRIPTION	CHK	APD
A	20-11-24	E.SH	ISSUE FOR APPROVAL	A.SH	M.M

DRAWING TITLE:
6TH OF OCTOBER MONORAIL
SHOP DRAWING FOR BRIDGE 6OL11-37
STEEL TRUSS (II).
FP22

Project Code	Rubric	Initiator	Lot	Ref	Number	Revision
93M	0407	AAC	60L11	DWG	90238	A

Tekla structures

-Drawing shall be updated according to the comments on the GA drawing.
-Approval is subjected to the approval of coordination package between multi-discipline.

REVIEWED WITH COMMENT
MONORAILS PROJECT

All holes are 22mm U.N.O Length & Area & Weight per piece

Mark	Profile	Grade	QTY	Length	Area	Weight
FP23	FLT20*400	S355J2N	1	4021.5	3.32	242.5

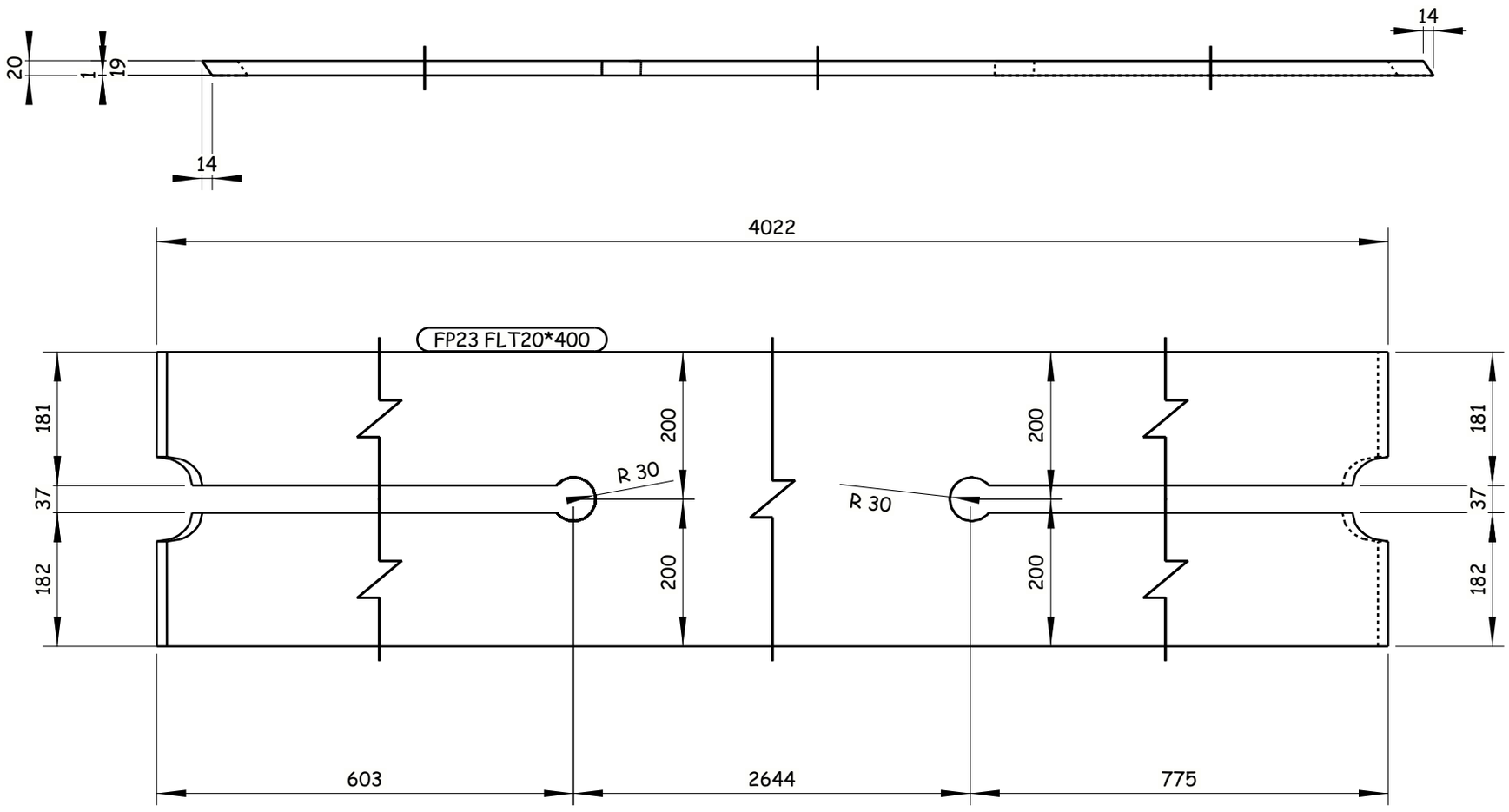

1 REQUIRED AS DRAWN E.SH FP23

GENERAL NOTES:

1. ALL DIMENSIONS ARE IN MILLIMETERS UNLESS OTHERWISE SPECIFIED.
2. LEVELS ARE IN METERS
3. DESIGN SERVICE LIFE OF 100 YEARS.
4. FLANGES OF TOP AND BOTTOM CHORDS TO BE SUPPLIED WITH IMPROVED THROUGH THICKNESS PROPERTIES Z25 ACCORDING TO EN10164.

REFERENCE DRAWINGS

1	93M-0407-SEN-6OL11-END-10118-B PAGE 01:17
2	
3	
4	
5	
6	
7	
8	
9	
10	
11	

6TH OF OCTOBER CITY RAIL TRANSIT MONORAIL &
NEW CAPITAL CITY RAIL TRANSIT MONORAIL

The Authority — Hill International Authority Consultant — Main Contractor — Designer

CONTRACTOR / CONSULTANT : ENGINEERING HOUSE FOR CONSULTANCY

SCALE: AS SHOWN | CHD/DRWING | DATE: 20.11.2024

REV	DATE	BY	DESCRIPTION	CHK	APD
A	20-11-24	E.SH	ISSUE FOR APPROVAL	A.SH	M.M

6 October Monorail Engineering Unit
Valid For Construction

DRAWING TITLE:
6TH OF OCTOBER MONORAIL
SHOP DRAWING FOR BRIDGE 6OL11-37
STEEL TRUSS (II).
FP23

Project Code	Rubric	Initiator	Lot	Ref	Number	Revision
9 3 M	0 4 0 7	A A C	6 0 L 1 1	D W G	90239	A

Tekla structures

-Drawing shall be updated according to the comments on the GA drawing.
-Approval is subjected to the approval of coordination package between multi-discipline.

REVIEWED WITH COMMENT
MONORAILS PROJECT

All holes are 22mm U.N.O Length & Area & Weight per piece

Mark	Profile	Grade	QTY	Length	Area	Weight
FP24	FLT20*400	S355J2N	1	4020.5	3.32	242.4

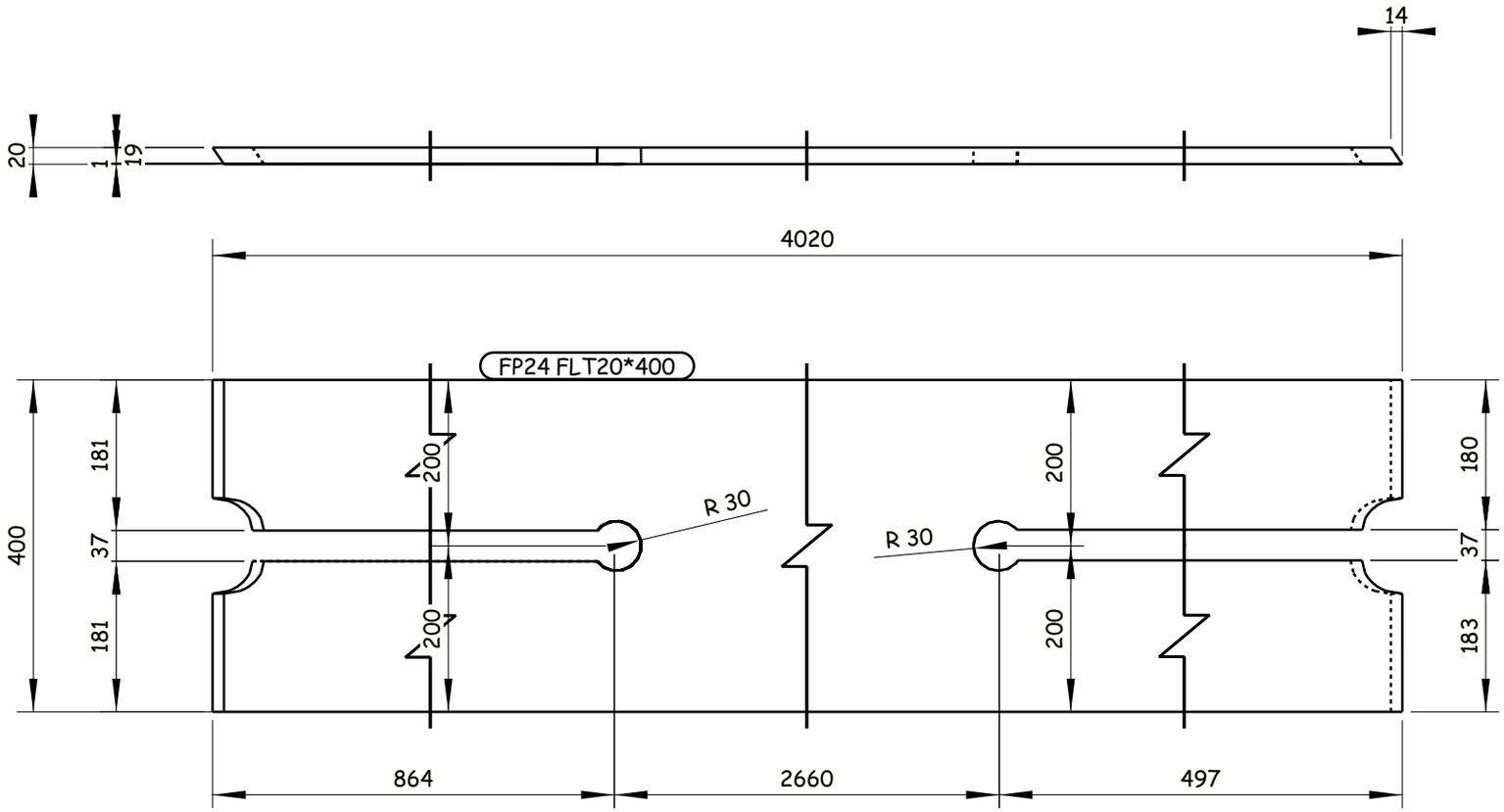

1 REQUIRED AS DRAWN E.SH FP24

Tekla structures

GENERAL NOTES:

1. ALL DIMENSIONS ARE IN MILLIMETERS UNLESS OTHERWISE SPECIFIED.
2. LEVELS ARE IN METERS
3. DESIGN SERVICE LIFE OF 100 YEARS.
4. FLANGES OF TOP AND BOTTOM CHORDS TO BE SUPPLIED WITH IMPROVED THROUGH THICKNESS PROPERTIES Z25 ACCORDING TO EN10164.

REFERENCE DRAWINGS

1	93M-0407-SEN-6OL11-END-10118-B PAGE 01:17
2	
3	
4	
5	
6	
7	
8	
9	
10	
11	

6TH OF OCTOBER CITY RAIL TRANSIT MONORAIL &
NEW CAPITAL CITY RAIL TRANSIT MONORAIL

The Authority — Hill International — Authority Consultant
Main Contractor
Designer

CONTRACTOR / CONSULTANT:
ENGINEERING HOUSE FOR CONSULTANCY

6 October Monorail
Engineering Unit
Valid For Construction

SCALE	SHOP DRAWING	DATE
AS SHOWN		20.11.2024

DRAWING TITLE:
6TH OF OCTOBER MONORAIL
SHOP DRAWING FOR BRIDGE 6OL11-37
STEEL TRUSS (II).
FP24

REV	DATE	BY	DESCRIPTION	CHK	APD
A	20-11-24	E.SH	ISSUE FOR APPROVAL	A.SH	M.M

Project Code	Rubric	Initiator	Lot	Ref	Number	Revision
93M	0407	AAC	60L11	DWG	90240	A

-Drawing shall be updated according to the comments on the GA drawing.
-Approval is subjected to the approval of coordination package between multi-discipline.

REVIEWED WITH COMMENT
MONORAILS PROJECT

All holes are 22mm U.N.O Length & Area & Weight per piece

Mark	Profile	Grade	QTY	Length	Area	Weight
FP25	PL45*820	S355J2N	8	1151.1	2.03	328.1

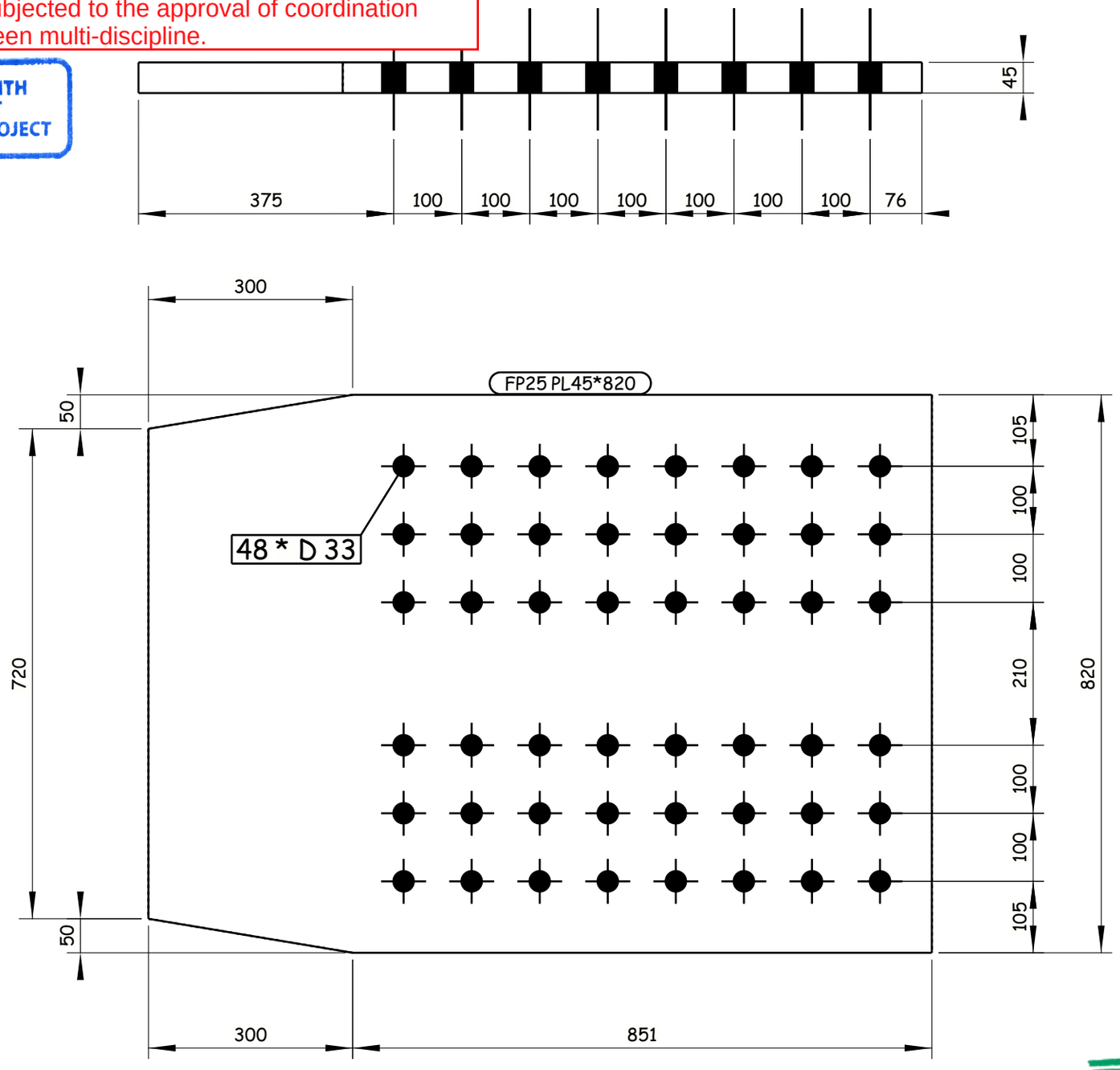

8 REQUIRED AS DRAWN E.SH FP25

GENERAL NOTES:

1. ALL DIMENSIONS ARE IN MILLIMETERS UNLESS OTHERWISE SPECIFIED.
2. LEVELS ARE IN METERS
3. DESIGN SERVICE LIFE OF 100 YEARS.
4. FLANGES OF TOP AND BOTTOM CHORDS TO BE SUPPLIED WITH IMPROVED THROUGH THICKNESS PROPERTIES Z25 ACCORDING TO EN10164.

REFERENCE DRAWINGS

1	93M-0407-SEN-6OL11-END-10118-B PAGE 01:17
2	
3	
4	
5	
6	
7	
8	
9	
10	
11	

6TH OF OCTOBER CITY RAIL TRANSIT MONORAIL &
NEW CAPITAL CITY RAIL TRANSIT MONORAIL

The Authority — Hill International — Authority Consultant
ORASCOM CONSTRUCTION — Main Contractor
BOMBARDIER
SENER — SHAKER CONSULTANCY GROUP — Designer

CONTRACTOR & CONSULTANT:

SCALE: AS SHOWN | SHOP DRAWING | DATE: 20.11.2024

DRAWING TITLE:
6TH OF OCTOBER MONORAIL
SHOP DRAWING FOR BRIDGE 6OL11-37
STEEL TRUSS (II).
FP25

REV.	DATE	BY	DESCRIPTION	CHK	APD
A	20-11-24	E.SH	ISSUE FOR APPROVAL	A.SH	M.M

Project Code	Rubric	Initiator	Lot	Ref	Number	Revision
93M	0407	AAC	60L11	DWG	90241	A

6 October Monorail
Engineering Unit
Valid For Construction

ENGINEERING HOUSE FOR CONSULTANCY

Tekla structures

-Drawing shall be updated according to the comments on the GA drawing.
-Approval is subjected to the approval of coordination package between multi-discipline.

REVIEWED WITH COMMENT
MONORAILS PROJECT

All holes are 22mm U.N.O Length & Area & Weight per piece

Mark	Profile	Grade	QTY	Length	Area	Weight
FP26	PL45*720	S355K2N	2	9079.0	13.98	2247.6

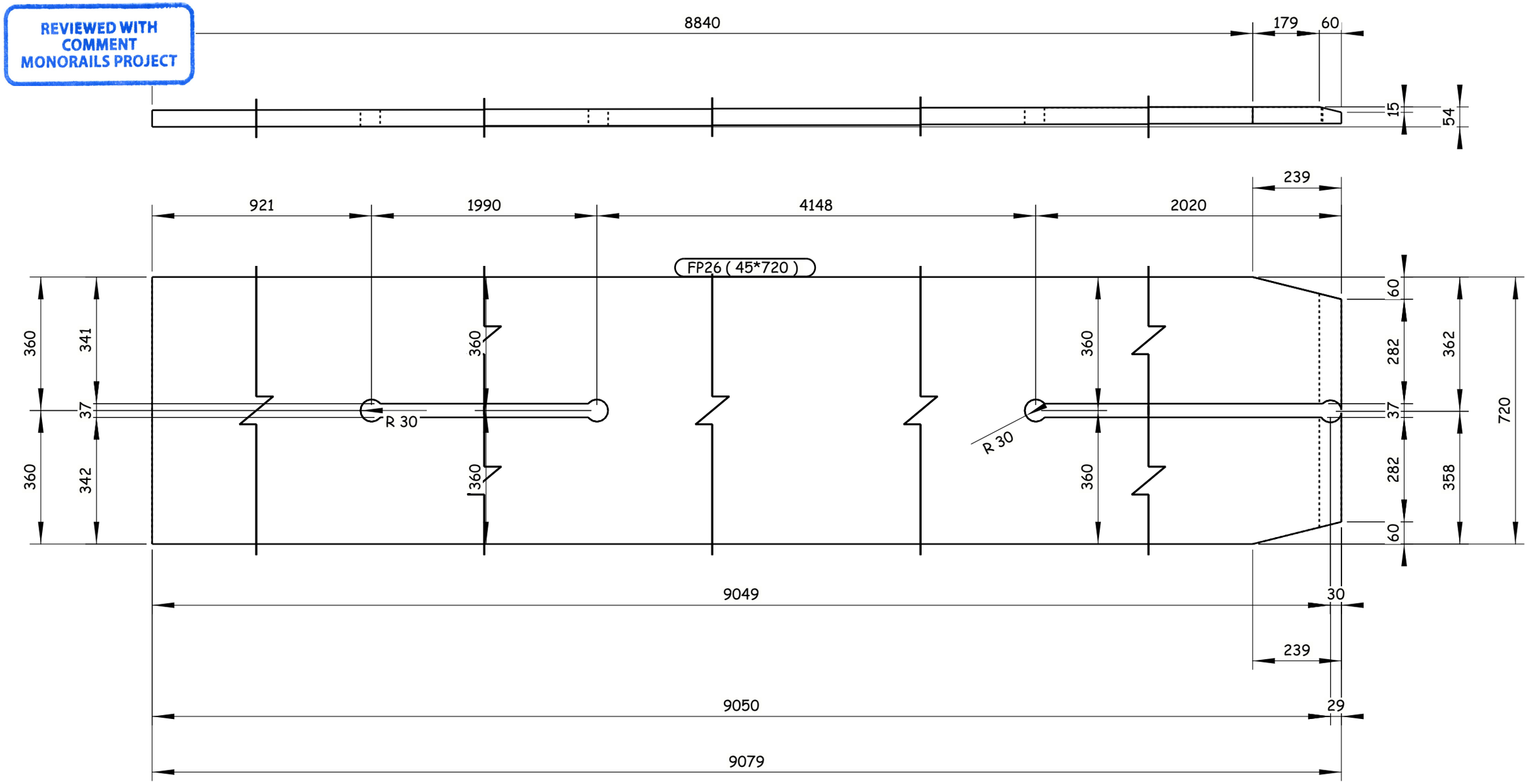

2 REQUIRED AS DRAWN E.SH FP26

GENERAL NOTES:

1. ALL DIMENSIONS ARE IN MILLIMETERS UNLESS OTHERWISE SPECIFIED.
2. LEVELS ARE IN METERS
3. DESIGN SERVICE LIFE OF 100 YEARS.
4. FLANGES OF TOP AND BOTTOM CHORDS TO BE SUPPLIED WITH IMPROVED THROUGH THICKNESS PROPERTIES Z25 ACCORDING TO EN10164.

REFERENCE DRAWINGS

1	93M-0407-SEN-6OL11-END-10118-B PAGE 01:17
2	
3	
4	
5	
6	
7	
8	
9	
10	
11	

6TH OF OCTOBER CITY RAIL TRANSIT MONORAIL &
NEW CAPITAL CITY RAIL TRANSIT MONORAIL

The Authority
Hill International
Authority Consultant

Main Contractor

Designer

CONTRACTOR / CONSULTANT:
ENGINEERING HOUSE FOR CONSULTANCY

SCALE: AS SHOWN | CHK'D DRAWING | DATE: 20.11.2024

REV	DATE	BY	DESCRIPTION	CHK	APD
A	20-11-24	E.SH	ISSUE FOR APPROVAL	A.SH	M.M

6 October Monorail
Engineering Unit
Valid For Construction

DRAWING TITLE:
6TH OF OCTOBER MONORAIL
SHOP DRAWING FOR BRIDGE 6OL11-37
STEEL TRUSS (II).
FP26

Project Code	Rubric	Initiator	Lot	Ref	Number	Revision
93M	0407	AAC	60L11	DWG	90242	A

Tekla structures

-Drawing shall be updated according to the comments on the GA drawing.
-Approval is subjected to the approval of coordination package between multi-discipline.

REVIEWED WITH COMMENT
MONORAILS PROJECT

All holes are 22mm U.N.O Length & Area & Weight per piece

Mark	Profile	Grade	QTY	Length	Area	Weight
FP27	PL45*720	S355K2N	4	9077.0	13.91	2301.4

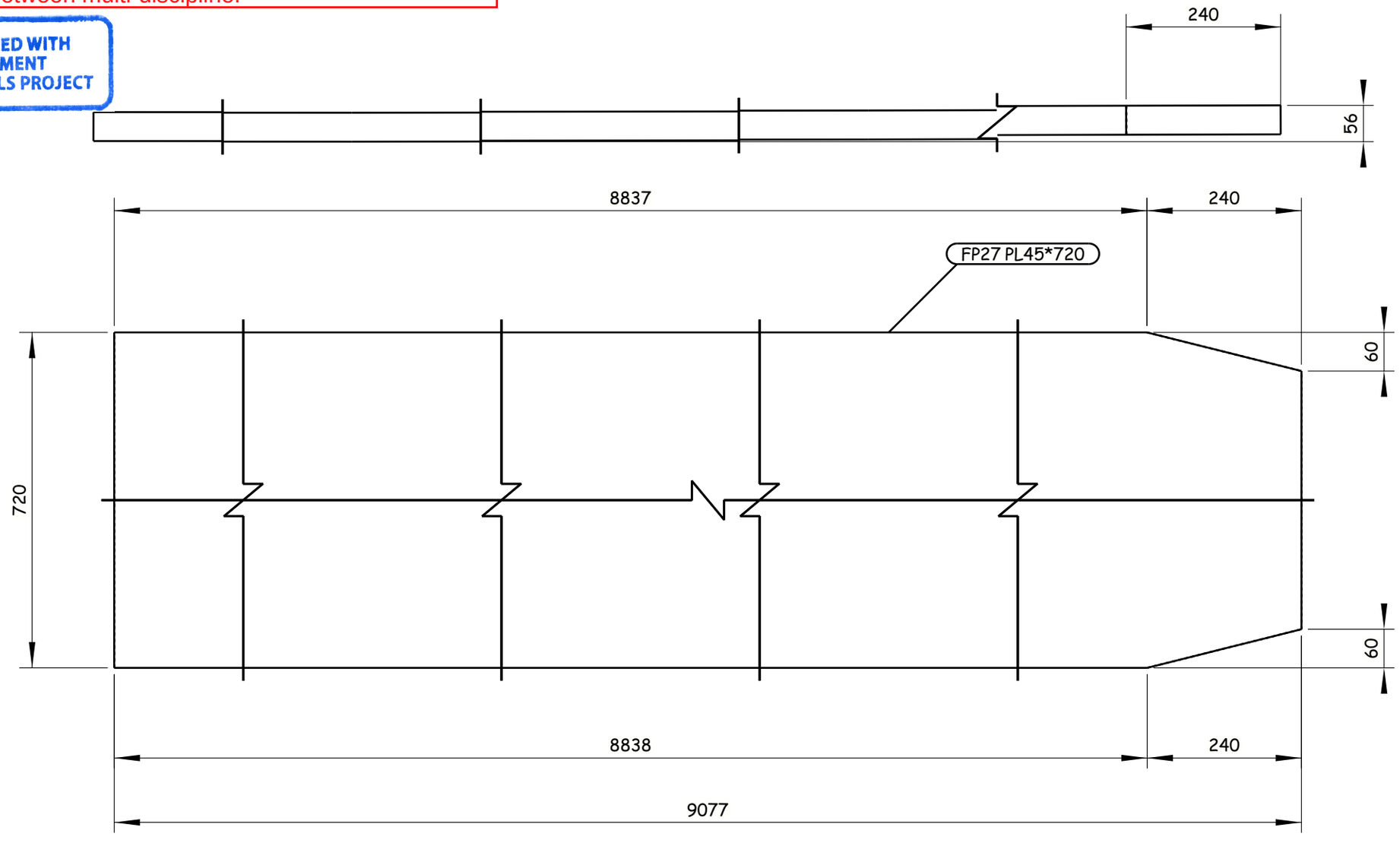

4 REQUIRED AS DRAWN E.SH FP27

Tekla structures

GENERAL NOTES:

1. ALL DIMENSIONS ARE IN MILLIMETERS UNLESS OTHERWISE SPECIFIED.
2. LEVELS ARE IN METERS
3. DESIGN SERVICE LIFE OF 100 YEARS.
4. FLANGES OF TOP AND BOTTOM CHORDS TO BE SUPPLIED WITH IMPROVED THROUGH THICKNESS PROPERTIES Z25 ACCORDING TO EN10164.

REFERENCE DRAWINGS

1	93M-0407-SEN-6OL11-END-10118-B PAGE 01:17
2	
3	
4	
5	
6	
7	
8	
9	
10	
11	

6TH OF OCTOBER CITY RAIL TRANSIT MONORAIL &
NEW CAPITAL CITY RAIL TRANSIT MONORAIL

The Authority — Hill International — Authority Consultant
ORASCOM CONSTRUCTION — BOMBARDIER — Main Contractor
SENER — SHAKER CONSULTANCY GROUP — Designer

CONTRACTOR & CONSULTANT:
ENGINEERING HOUSE FOR CONSULTANCY

6 October Monorail
Engineering Unit
Valid For Construction

SCALE	CHK'D DRAWING	DATE
AS SHOWN		20.11.2024

REV	DATE	BY	DESCRIPTION	CHK	APD
A	20-11-24	E.SH	ISSUE FOR APPROVAL	A.SH	M.M

DRAWING TITLE:
6TH OF OCTOBER MONORAIL
SHOP DRAWING FOR BRIDGE 6OL11-37
STEEL TRUSS (II).
FP27

Project Code	Rubric	Initiator	Lot	Ref	Number	Revision
93M	0407	AAC	60L11	DWG	90243	A

-Drawing shall be updated according to the comments on the GA drawing.
-Approval is subjected to the approval of coordination package between multi-discipline.

REVIEWED WITH COMMENT
MONORAILS PROJECT

All holes are 22mm U.N.O Length & Area & Weight per piece

Mark	Profile	Grade	QTY	Length	Area	Weight
FP28	FLT30*400	S355J2N	2	4019.5	3.43	362.7

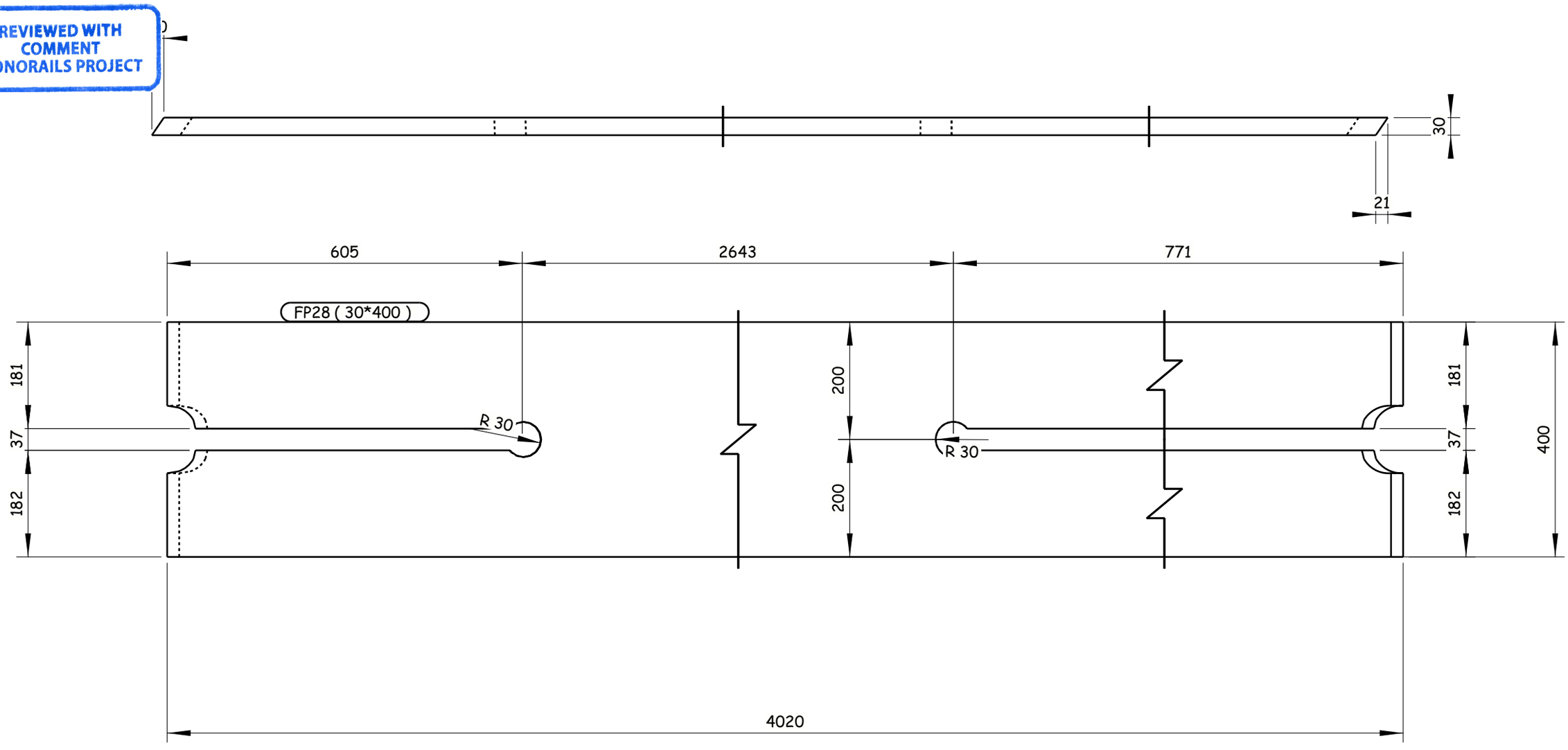

2 REQUIRED AS DRAWN E.SH FP28

GENERAL NOTES:

1. ALL DIMENSIONS ARE IN MILLIMETERS UNLESS OTHERWISE SPECIFIED.
2. LEVELS ARE IN METERS
3. DESIGN SERVICE LIFE OF 100 YEARS.
4. FLANGES OF TOP AND BOTTOM CHORDS TO BE SUPPLIED WITH IMPROVED THROUGH THICKNESS PROPERTIES Z25 ACCORDING TO EN10164.

REFERENCE DRAWINGS

1	93M-0407-SEN-6OL11-END-10118-B PAGE 01:17
2	
3	
4	
5	
6	
7	
8	
9	
10	
11	

6TH OF OCTOBER CITY RAIL TRANSIT MONORAIL &
NEW CAPITAL CITY RAIL TRANSIT MONORAIL

The Authority | Hill International Authority Consultant | ORASCOM CONSTRUCTION | BOMBARDIER | Main Contractor | SENER | SHAKER CONSULTANCY GROUP | Designer

CONTRACTOR & CONSULTANT : ENGINEERING HOUSE FOR CONSULTANCY

6 October Monorail Engineering Unit
Valid For Construction

SCALE	SHOP DRAWING	DATE
AS SHOWN		20.11.2024

REV	DATE	BY	DESCRIPTION	CHK	APD
A	20-11-24	E.SH	ISSUE FOR APPROVAL	A.SH	M.M

DRAWING TITLE:
6TH OF OCTOBER MONORAIL
SHOP DRAWING FOR BRIDGE 6OL11-37
STEEL TRUSS (II).
FP28

Project Code	Rubric	Initiator	Lot	Ref	Number	Revision
93M	0407	AAC	60L11	DWG	90244	A

Tekla structures

-Drawing shall be updated according to the comments on the GA drawing.
-Approval is subjected to the approval of coordination package between multi-discipline.

REVIEWED WITH COMMENT
MONORAILS PROJECT

All holes are 22mm U.N.O Length & Area & Weight per piece

Mark	Profile	Grade	QTY	Length	Area	Weight
FP29	FLT30*400	S355J2N	2	4050.1	3.46	365.5

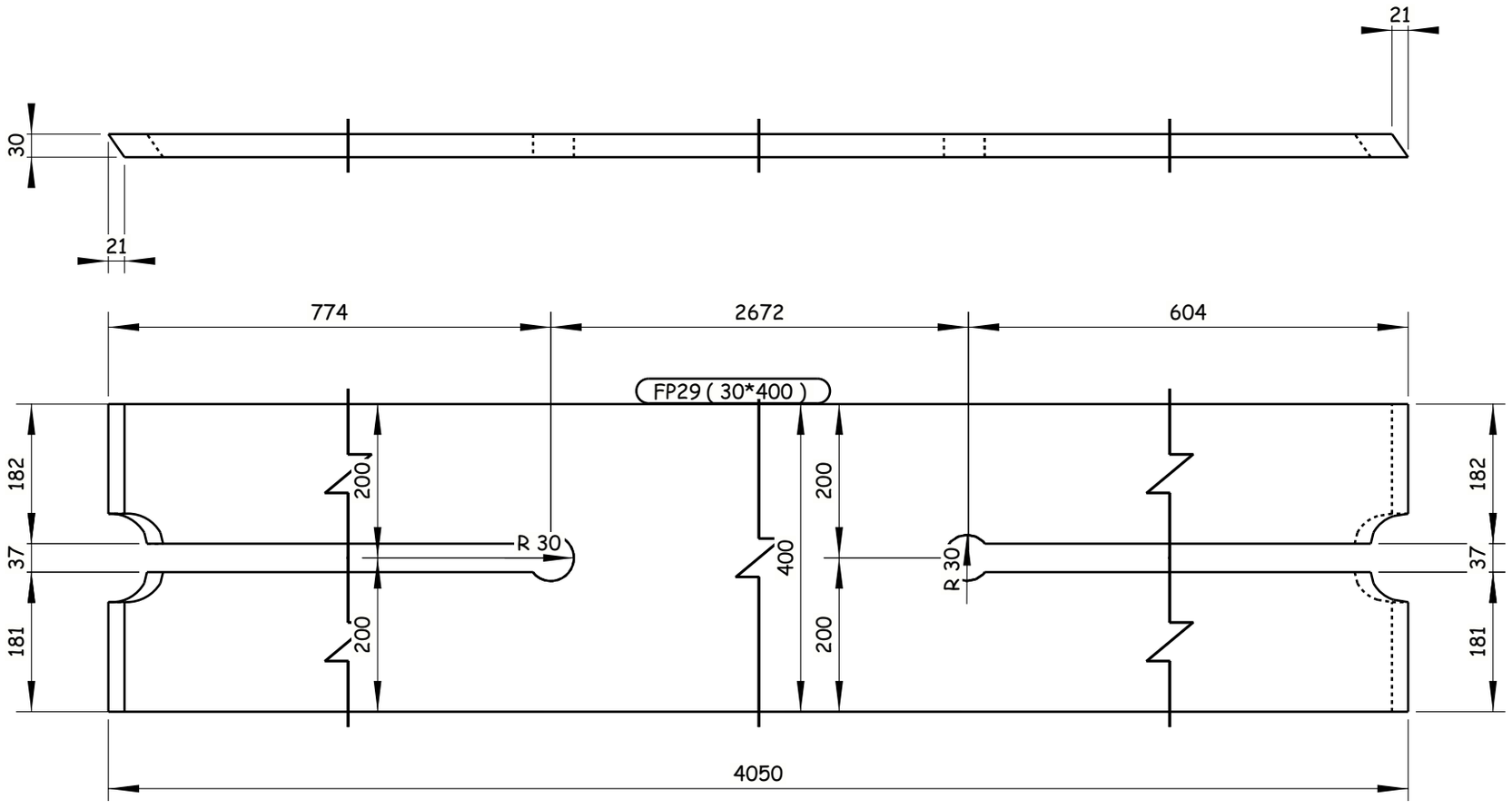

2 REQUIRED AS DRAWN E.SH FP29

GENERAL NOTES:

1. ALL DIMENSIONS ARE IN MILLIMETERS UNLESS OTHERWISE SPECIFIED.
2. LEVELS ARE IN METERS
3. DESIGN SERVICE LIFE OF 100 YEARS.
4. FLANGES OF TOP AND BOTTOM CHORDS TO BE SUPPLIED WITH IMPROVED THROUGH THICKNESS PROPERTIES Z25 ACCORDING TO EN10164.

REFERENCE DRAWINGS

1	93M-0407-SEN-6OL11-END-10118-B PAGE 01:17
2	
3	
4	
5	
6	
7	
8	
9	
10	
11	

6TH OF OCTOBER CITY RAIL TRANSIT MONORAIL &
NEW CAPITAL CITY RAIL TRANSIT MONORAIL

The Authority — Hill International Authority Consultant

ORASCOM CONSTRUCTION — BOMBARDIER — Main Contractor

SENER — SHAKER CONSULTANCY GROUP — Designer

CONTRACTOR / CONSULTANT :

ENGINEERING HOUSE FOR CONSULTANCY

REV	DATE	BY	DESCRIPTION	CHK	APD
A	20-11-24	E.SH	ISSUE FOR APPROVAL	A.SH	M.M

SCALE: AS SHOWN | CHD DRAWING | DATE: 20.11.2024

6 October Monorail
Engineering Unit
Valid For Construction

DRAWING TITLE:
6TH OF OCTOBER MONORAIL
SHOP DRAWING FOR BRIDGE 6OL11-37
STEEL TRUSS (II).
FP29

Project Code	Rubric	Initiator	Lot	Ref	Number	Revision
93M	0407	AAC	60L11	DWG	90245	A

Tekla structures

-Drawing shall be updated according to the comments on the GA drawing.
-Approval is subjected to the approval of coordination package between multi-discipline.

REVIEWED WITH COMMENT
MONORAILS PROJECT

All holes are 22mm U.N.O Length & Area & Weight per piece

Mark	Profile	Grade	QTY	Length	Area	Weight
FP30	FLT20*400	S355J2N	1	4025.1	3.32	242.6

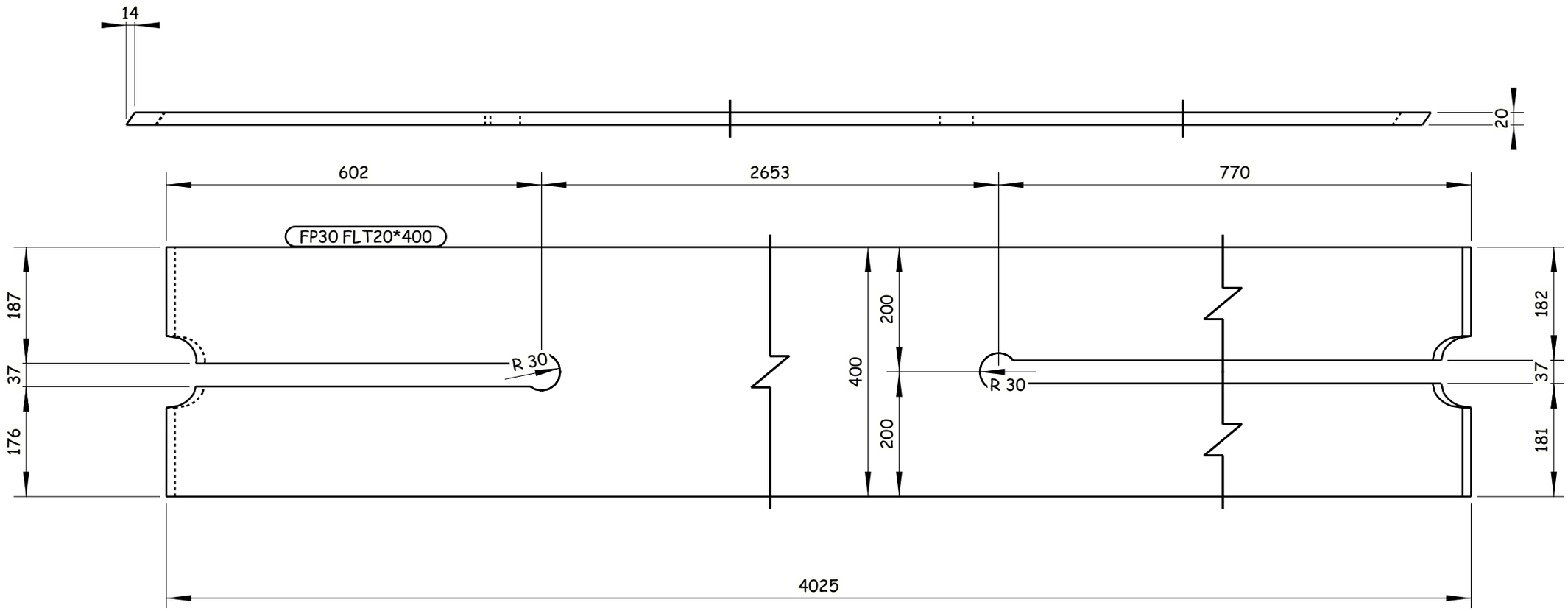

1 REQUIRED AS DRAWN E.SH FP30

GENERAL NOTES:

1. ALL DIMENSIONS ARE IN MILLIMETERS UNLESS OTHERWISE SPECIFIED.
2. LEVELS ARE IN METERS
3. DESIGN SERVICE LIFE OF 100 YEARS.
4. FLANGES OF TOP AND BOTTOM CHORDS TO BE SUPPLIED WITH IMPROVED THROUGH THICKNESS PROPERTIES Z25 ACCORDING TO EN10164.

REFERENCE DRAWINGS

1	93M-0407-SEN-6OL11-END-10118-B PAGE 01:17
2	
3	
4	
5	
6	
7	
8	
9	
10	
11	

6TH OF OCTOBER CITY RAIL TRANSIT MONORAIL &
NEW CAPITAL CITY RAIL TRANSIT MONORAIL

The Authority — Hill International — Authority Consultant
ORASCOM CONSTRUCTION — Main Contractor
BOMBARDIER
SENER — SHAKER — Designer

CONTRACTOR / CONSULTANT :
ENGINEERING HOUSE FOR CONSULTANCY

6 October Monorail
Engineering Unit
Valid For Construction

SCALE: AS SHOWN | SHD DRAWING | DATE: 20.11.2024

REV	DATE	BY	DESCRIPTION	CHK	APD
A	20-11-24	E.SH	ISSUE FOR APPROVAL	A.SH	M.M

DRAWING TITLE:
6TH OF OCTOBER MONORAIL
SHOP DRAWING FOR BRIDGE 6OL11-37
STEEL TRUSS (II).
FP30

Project Code	Rubric	Initiator	Lot	Ref	Number	Revision
93M	04 07	AAC	60 L11	DWG	90246	A

Tekla structures

-Drawing shall be updated according to the comments on the GA drawing.
-Approval is subjected to the approval of coordination package between multi-discipline.

REVIEWED WITH COMMENT
MONORAILS PROJECT

All holes are 22mm U.N.O Length & Area & Weight per piece

Mark	Profile	Grade	QTY	Length	Area	Weight
FP31	FLT20*400	S355J2N	1	4021.3	3.32	242.4

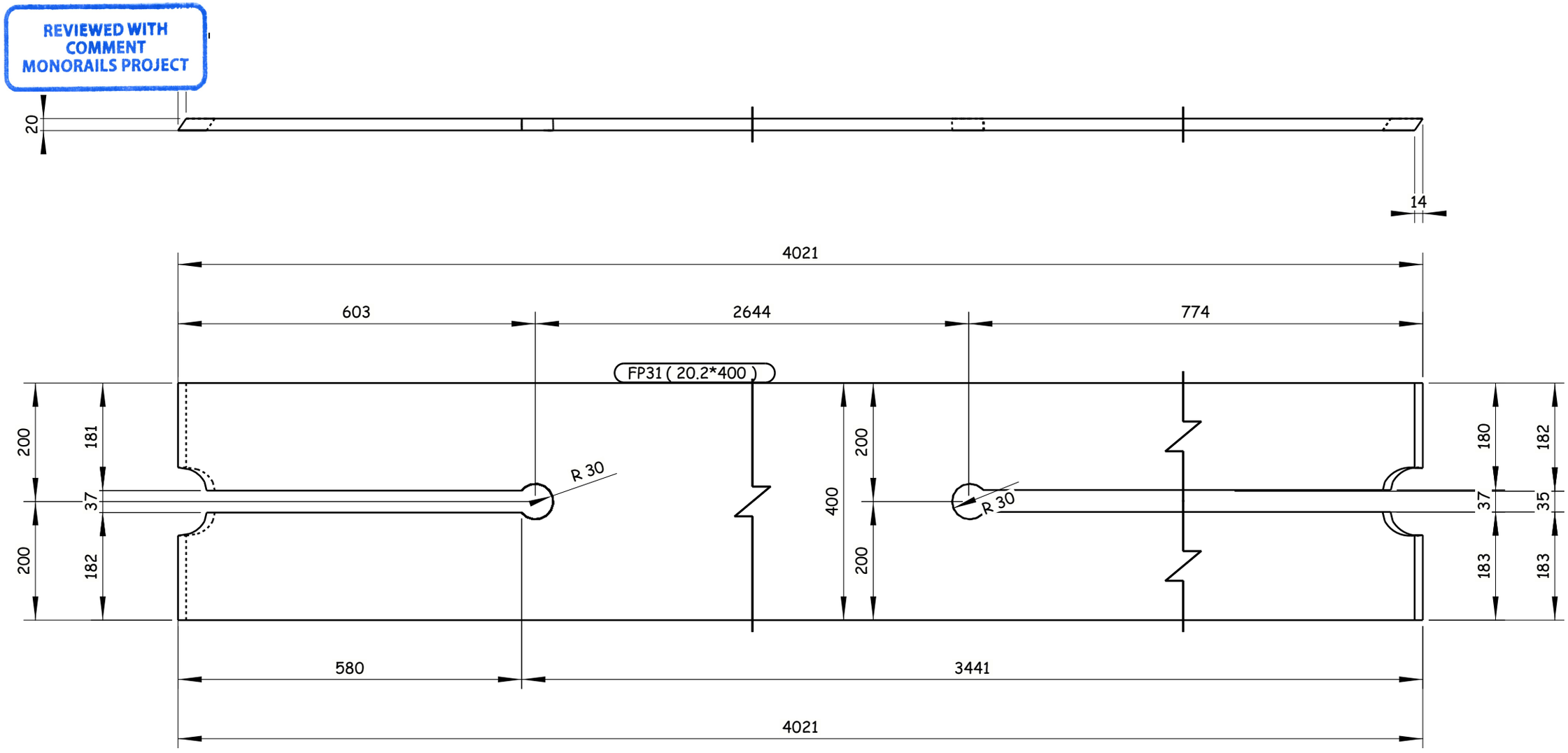

1 REQUIRED AS DRAWN E.SH FP31

Tekla structures

GENERAL NOTES:

1. ALL DIMENSIONS ARE IN MILLIMETERS UNLESS OTHERWISE SPECIFIED.
2. LEVELS ARE IN METERS
3. DESIGN SERVICE LIFE OF 100 YEARS.
4. FLANGES OF TOP AND BOTTOM CHORDS TO BE SUPPLIED WITH IMPROVED THROUGH THICKNESS PROPERTIES Z25 ACCORDING TO EN10164.

REFERENCE DRAWINGS

1	93M-0407-SEN-6OL11-END-10118-B PAGE 01:17
2	
3	
4	
5	
6	
7	
8	
9	
10	
11	

6TH OF OCTOBER CITY RAIL TRANSIT MONORAIL &
NEW CAPITAL CITY RAIL TRANSIT MONORAIL

The Authority — Hill International Authority Consultant | Main Contractor | Designer

CONTRACTOR / CONSULTANT: ENGINEERING HOUSE FOR CONSULTANCY

6 October Monorail Engineering Unit
Valid For Construction

SCALE: AS SHOWN | SHOP DRAWING | DATE: 20.11.2024

DRAWING TITLE:
6TH OF OCTOBER MONORAIL
SHOP DRAWING FOR BRIDGE 6OL11-37
STEEL TRUSS (II).
FP31

REV	DATE	BY	DESCRIPTION	CHK	APD
A	20-11-24	E.SH	ISSUE FOR APPROVAL	A.SH	M.M

Project Code	Rubric	Initiator	Lot	Ref	Number	Revision
9 3 M	0 4 0 7	A A C	6 0 L 1 1	D W G	90247	A

-Drawing shall be updated according to the comments on the GA drawing.
-Approval is subjected to the approval of coordination package between multi-discipline.

REVIEWED WITH COMMENT
MONORAILS PROJECT

All holes are 22mm U.N.O Length & Area & Weight per piece

Mark	Profile	Grade	QTY	Length	Area	Weight
FP32	FLT30*600	S355J2N	2	12503.7	15.73	1730.5

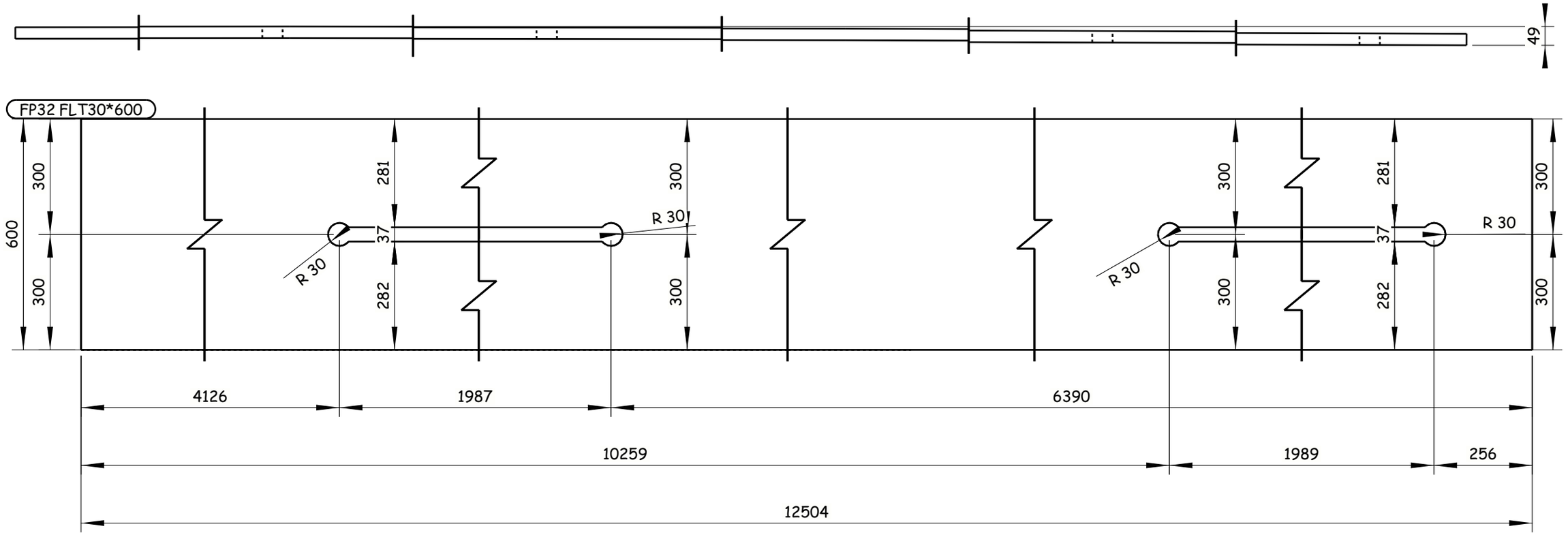

2 REQUIRED AS DRAWN E.SH FP32

6 October Monorail
Engineering Unit
Valid For Construction

GENERAL NOTES:

1. ALL DIMENSIONS ARE IN MILLIMETERS UNLESS OTHERWISE SPECIFIED.
2. LEVELS ARE IN METERS
3. DESIGN SERVICE LIFE OF 100 YEARS.
4. FLANGES OF TOP AND BOTTOM CHORDS TO BE SUPPLIED WITH IMPROVED THROUGH THICKNESS PROPERTIES Z25 ACCORDING TO EN10164.

REFERENCE DRAWINGS

1	93M-0407-SEN-6OL11-END-10118-B PAGE 01:17
2	
3	
4	
5	
6	
7	
8	
9	
10	
11	

6TH OF OCTOBER CITY RAIL TRANSIT MONORAIL &
NEW CAPITAL CITY RAIL TRANSIT MONORAIL

The Authority — Hill International Authority Consultant
Main Contractor
Designer

CONTRACTOR / CONSULTANT:
ENGINEERING HOUSE FOR CONSULTANCY

SCALE: AS SHOWN
CHD DRAWING
DATE: 20.11.2024

REV	DATE	BY	DESCRIPTION	CHK	APD
A	20-11-24	E.SH	ISSUE FOR APPROVAL	A.SH	M.M

DRAWING TITLE:
6TH OF OCTOBER MONORAIL
SHOP DRAWING FOR BRIDGE 6OL11-37
STEEL TRUSS (II).
FP32

Project Code	Rubric	Initiator	Lot	Ref	Number	Revision
9 3 M	0 4 0 7	A A C	6 0 L 1 1	D W G	90248	A

Tekla structures

-Drawing shall be updated according to the comments on the GA drawing.
-Approval is subjected to the approval of coordination package between multi-discipline.

REVIEWED WITH COMMENT
MONORAILS PROJECT

All holes are 22mm U.N.O Length & Area & Weight per piece

Mark	Profile	Grade	QTY	Length	Area	Weight
FP33	FLT25*600	S355J2N	1	18321.3	22.73	2095.7

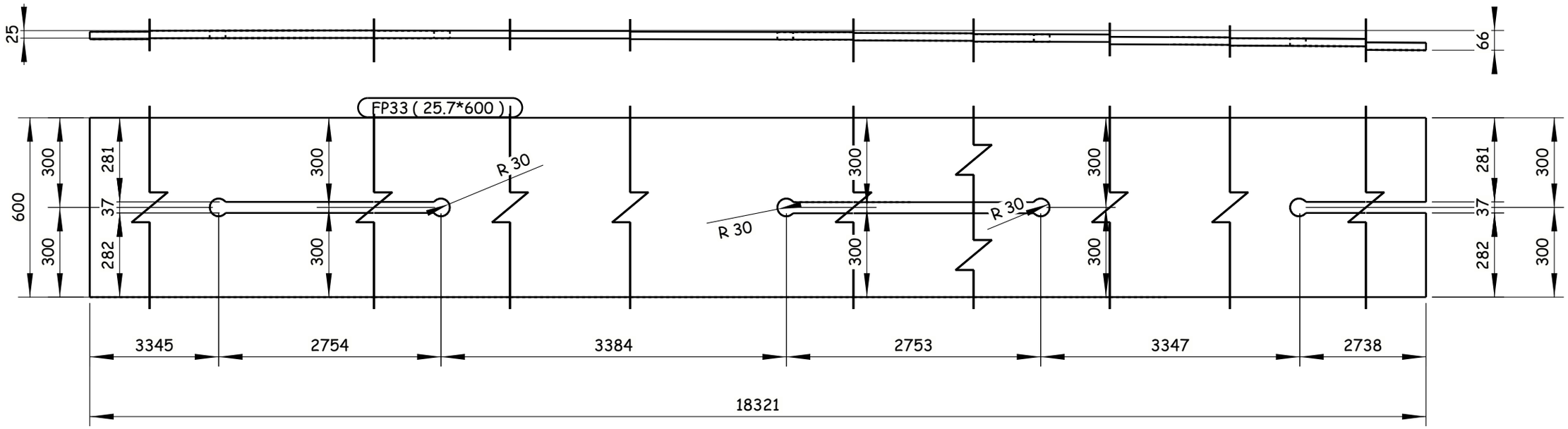

1 REQUIRED AS DRAWN E.SH FP33

GENERAL NOTES:

1. ALL DIMENSIONS ARE IN MILLIMETERS UNLESS OTHERWISE SPECIFIED.
2. LEVELS ARE IN METERS
3. DESIGN SERVICE LIFE OF 100 YEARS.
4. FLANGES OF TOP AND BOTTOM CHORDS TO BE SUPPLIED WITH IMPROVED THROUGH THICKNESS PROPERTIES Z25 ACCORDING TO EN10164.

REFERENCE DRAWINGS

1	93M-0407-SEN-6OL11-END-10118-B PAGE 01:17
2	
3	
4	
5	
6	
7	
8	
9	
10	
11	

6TH OF OCTOBER CITY RAIL TRANSIT MONORAIL &
NEW CAPITAL CITY RAIL TRANSIT MONORAIL

The Authority — Authority Consultant
Hill International
ORASCOM CONSTRUCTION — Main Contractor
BOMBARDIER
SENER
SHAKER CONSULTANCY GROUP — Designer

CONTRACTOR :
CONSULTANT :
ENGINEERING HOUSE FOR CONSULTANCY

SCALE AS SHOWN | CHD DRAWING | DATE 20.11.2024

REV	DATE	BY	DESCRIPTION	CHK	APD
A	20-11-24	E.SH	ISSUE FOR APPROVAL	A.SH	M.M

6 October Monorail
Engineering Unit
Valid For Construction

DRAWING TITLE:
6TH OF OCTOBER MONORAIL
SHOP DRAWING FOR BRIDGE 6OL11-37
STEEL TRUSS (II).
FP33

Project Code	Rubric	Initiator	Lot	Ref	Number	Revision
93M	0407	AAC	60L11	DWG	90249	A

Tekla structures

-Drawing shall be updated according to the comments on the GA drawing.
-Approval is subjected to the approval of coordination package between multi-discipline.

REVIEWED WITH COMMENT
MONORAILS PROJECT

All holes are 22mm U.N.O Length & Area & Weight per piece

Mark	Profile	Grade	QTY	Length	Area	Weight
FP34	PL40*700	S355J2N	3	1467.4	2.19	311.2

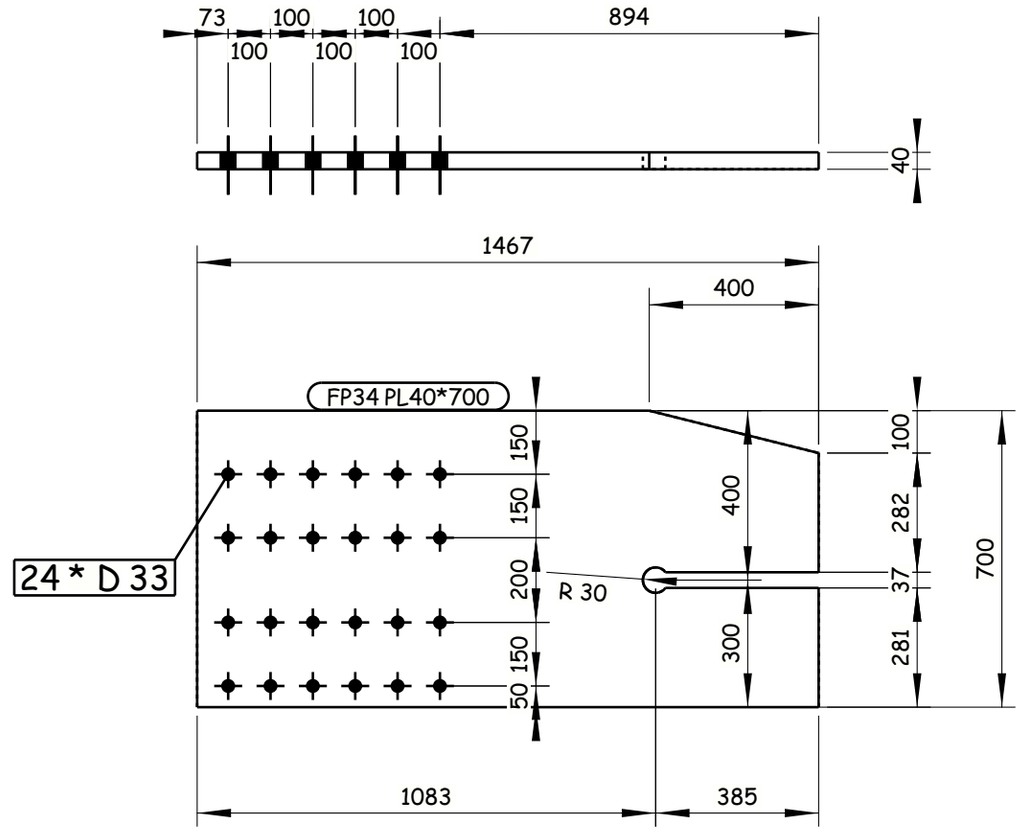

3 REQUIRED AS DRAWN E.SH FP34

Tekla structures

GENERAL NOTES:

1. ALL DIMENSIONS ARE IN MILLIMETERS UNLESS OTHERWISE SPECIFIED.
2. LEVELS ARE IN METERS
3. DESIGN SERVICE LIFE OF 100 YEARS.
4. FLANGES OF TOP AND BOTTOM CHORDS TO BE SUPPLIED WITH IMPROVED THROUGH THICKNESS PROPERTIES Z25 ACCORDING TO EN10164.

REFERENCE DRAWINGS

1	93M-0407-SEN-6OL11-END-10118-B PAGE 01:17
2	
3	
4	
5	
6	
7	
8	
9	
10	
11	

6TH OF OCTOBER CITY RAIL TRANSIT MONORAIL &
NEW CAPITAL CITY RAIL TRANSIT MONORAIL

The Authority — Hill International Authority Consultant — Main Contractor — Designer

CONTRACTOR CONSULTANT: ENGINEERING HOUSE FOR CONSULTANCY

6 October Monorail Engineering Unit
Valid For Construction

SCALE	SHD/DRAWING	DATE
AS SHOWN		20.11.2024

DRAWING TITLE:
6TH OF OCTOBER MONORAIL
SHOP DRAWING FOR BRIDGE 6OL11-37
STEEL TRUSS (II).
FP34

REV	DATE	BY	DESCRIPTION	CHK	APD
A	20-11-24	E.SH	ISSUE FOR APPROVAL	A.SH	M.M

Project Code	Rubric	Initiator	Lot	Ref	Number	Revision
93	M0407	AAC60L11	DWG		90250	A

-Drawing shall be updated according to the comments on the GA drawing.
-Approval is subjected to the approval of coordination package between multi-discipline.

REVIEWED WITH COMMENT
MONORAILS PROJECT

All holes are 22mm U.N.O Length & Area & Weight per piece

Mark	Profile	Grade	QTY	Length	Area	Weight
FP35	FLT40*600	S355J2N	1	1467.4	1.93	267.9

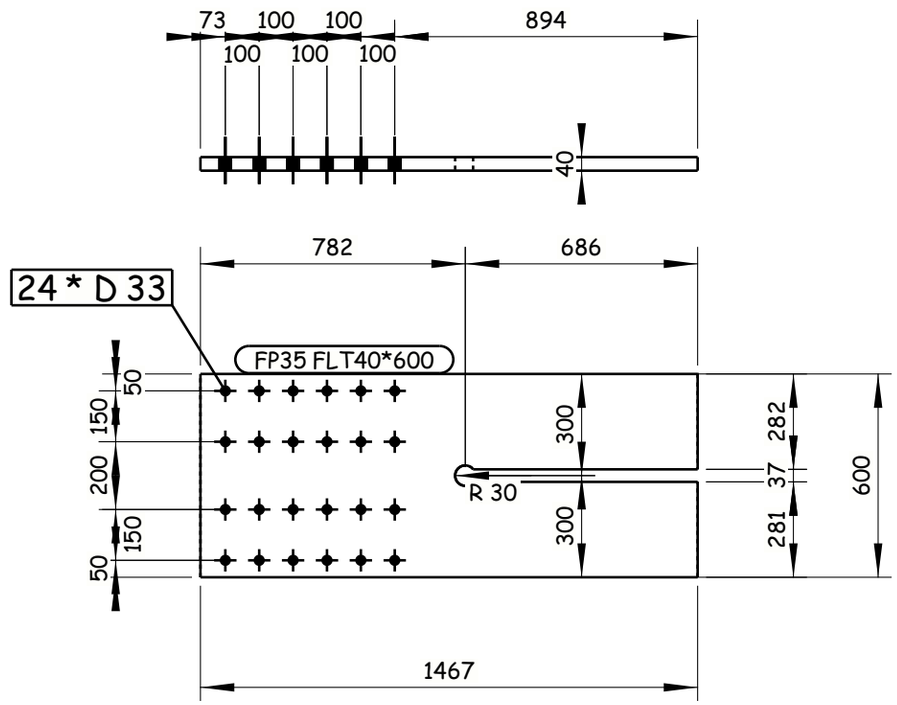

1 REQUIRED AS DRAWN E.SH FP35

GENERAL NOTES:

1. ALL DIMENSIONS ARE IN MILLIMETERS UNLESS OTHERWISE SPECIFIED.
2. LEVELS ARE IN METERS
3. DESIGN SERVICE LIFE OF 100 YEARS.
4. FLANGES OF TOP AND BOTTOM CHORDS TO BE SUPPLIED WITH IMPROVED THROUGH THICKNESS PROPERTIES Z25 ACCORDING TO EN10164.

REFERENCE DRAWINGS

1	93M-0407-SEN-6OL11-END-10118-B PAGE 01:17
2	
3	
4	
5	
6	
7	
8	
9	
10	
11	

6TH OF OCTOBER CITY RAIL TRANSIT MONORAIL &
NEW CAPITAL CITY RAIL TRANSIT MONORAIL

The Authority — Authority Consultant
Hill International
ORASCOM CONSTRUCTION — BOMBARDIER — Main Contractor
SENER — SHAKER CONSULTANCY GROUP — Designer

CONTRACTOR & CONSULTANT:
ENGINEERING HOUSE FOR CONSULTANCY

6 October Monorail
Engineering Unit
Valid For Construction

SCALE: AS SHOWN | SHOP DRAWING | DATE: 20.11.2024

REV	DATE	BY	DESCRIPTION	CHK	APD
A	20-11-24	E.SH	ISSUE FOR APPROVAL	A.SH	M.M

DRAWING TITLE:
6TH OF OCTOBER MONORAIL
SHOP DRAWING FOR BRIDGE 6OL11-37
STEEL TRUSS (II).
FP35

Project Code	Rubric	Initiator	Lot	Ref	Number	Revision
9 3 M	0 4 0 7	A A C	6 0 L 1 1	D W G	90251	A

Tekla structures

-Drawing shall be updated according to the comments on the GA drawing.
-Approval is subjected to the approval of coordination package between multi-discipline.

REVIEWED WITH COMMENT
MONORAILS PROJECT

All holes are 22mm U.N.O Length & Area & Weight per piece

Mark	Profile	Grade	QTY	Length	Area	Weight
FP36	FLT30*400	S355J2N	2	4017.8	3.43	362.4

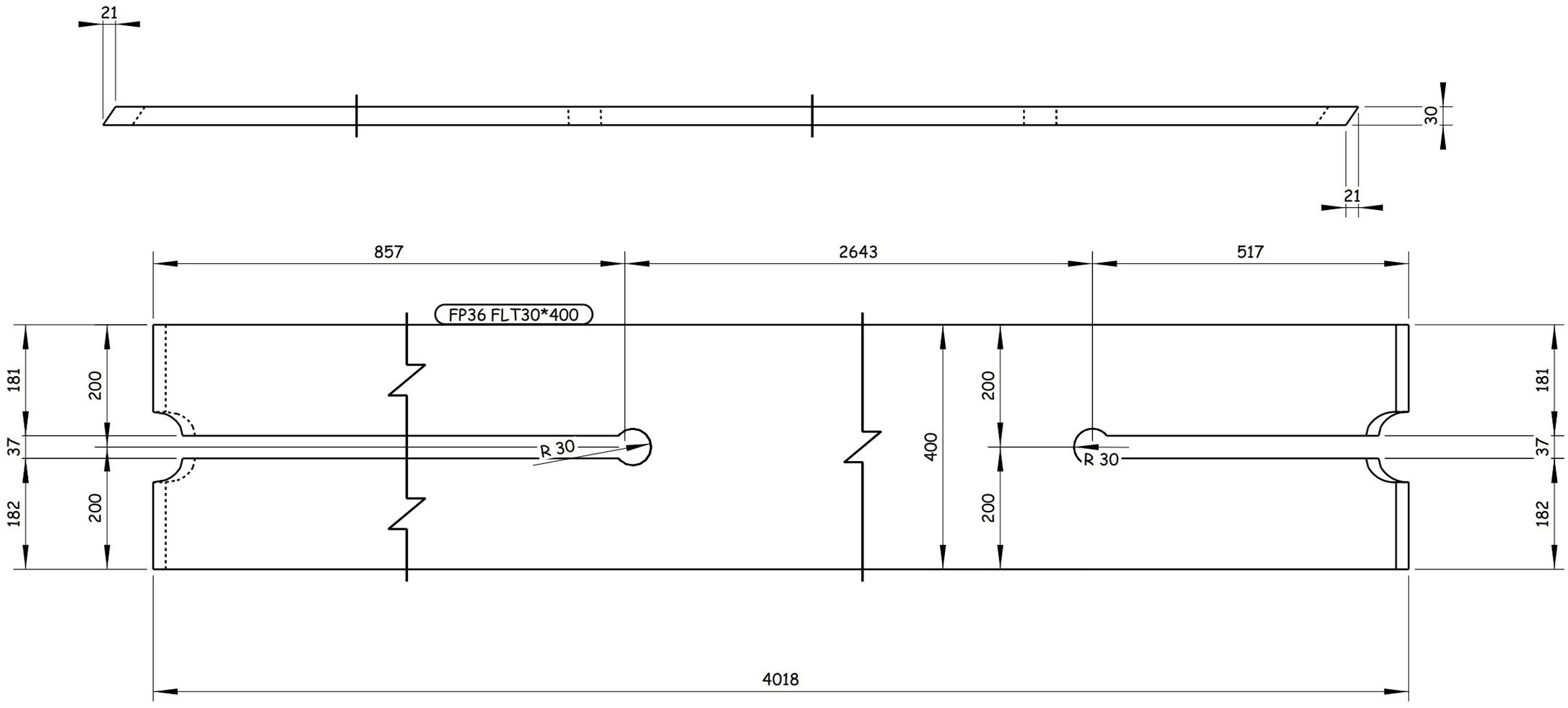

2 REQUIRED AS DRAWN E.SH FP36

6 October Monorail
Engineering Unit
Valid For Construction

GENERAL NOTES:
1. ALL DIMENSIONS ARE IN MILLIMETERS UNLESS OTHERWISE SPECIFIED.
2. LEVELS ARE IN METERS
3. DESIGN SERVICE LIFE OF 100 YEARS.
4. FLANGES OF TOP AND BOTTOM CHORDS TO BE SUPPLIED WITH IMPROVED THROUGH THICKNESS PROPERTIES Z25 ACCORDING TO EN10164.

REFERENCE DRAWINGS

1	93M-0407-SEN-6OL11-END-10118-B PAGE 01:17
2	
3	
4	
5	
6	
7	
8	
9	
10	
11	

6TH OF OCTOBER CITY RAIL TRANSIT MONORAIL &
NEW CAPITAL CITY RAIL TRANSIT MONORAIL

The Authority — Hill International Authority Consultant
Main Contractor
Designer

CONTRACTOR CONSULTANT :
ENGINEERING HOUSE FOR CONSULTANCY

SCALE AS SHOWN | CHD DRAWING | DATE 20.11.2024

REV	DATE	BY	DESCRIPTION	CHK	APD
A	20-11-24	E.SH	ISSUE FOR APPROVAL	A.SH	M.M

DRAWING TITLE:
6TH OF OCTOBER MONORAIL
SHOP DRAWING FOR BRIDGE 6OL11-37
STEEL TRUSS (II).
FP36

Project Code	Rubric	Initiator	Lot	Ref	Number	Revision
93M	0407	AAC	60L11	DWG	90252	A

Tekla structures

-Drawing shall be updated according to the comments on the GA drawing.
-Approval is subjected to the approval of coordination package between multi-discipline.

REVIEWED WITH COMMENT
MONORAILS PROJECT

All holes are 22mm U.N.O Length & Area & Weight per piece

Mark	Profile	Grade	QTY	Length	Area	Weight
FP37	FLT30*400	S355J2N	2	4052.5	3.46	365.9

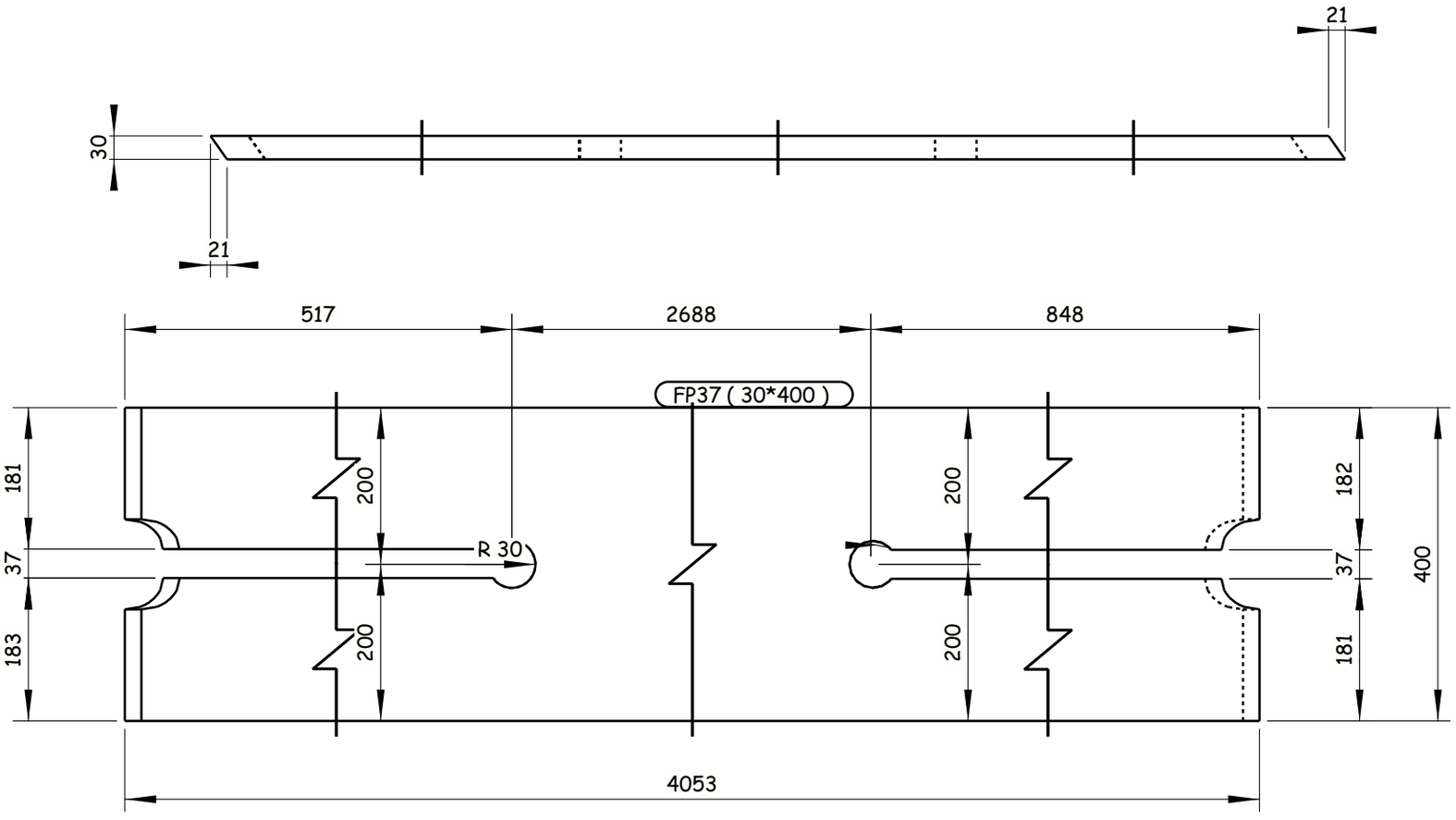

2 REQUIRED AS DRAWN E.SH FP37

Tekla structures

GENERAL NOTES:

1. ALL DIMENSIONS ARE IN MILLIMETERS UNLESS OTHERWISE SPECIFIED.
2. LEVELS ARE IN METERS
3. DESIGN SERVICE LIFE OF 100 YEARS.
4. FLANGES OF TOP AND BOTTOM CHORDS TO BE SUPPLIED WITH IMPROVED THROUGH THICKNESS PROPERTIES Z25 ACCORDING TO EN10164.

REFERENCE DRAWINGS

1	93M-0407-SEN-6OL11-END-10118-B PAGE 01:17
2	
3	
4	
5	
6	
7	
8	
9	
10	
11	

6TH OF OCTOBER CITY RAIL TRANSIT MONORAIL &
NEW CAPITAL CITY RAIL TRANSIT MONORAIL

The Authority
Hill International
Authority Consultant

Main Contractor

Designer

CONTRACTOR / CONSULTANT :

ENGINEERING HOUSE FOR CONSULTANCY

6 October Monorail
Engineering Unit
Valid For Construction

SCALE AS SHOWN | SHD DRAWING | DATE 20.11.2024

REV	DATE	BY	DESCRIPTION	CHK	APD
A	20-11-24	E.SH	ISSUE FOR APPROVAL	A.SH	M.M

DRAWING TITLE:
6TH OF OCTOBER MONORAIL
SHOP DRAWING FOR BRIDGE 6OL11-37
STEEL TRUSS (II).
FP37

Project Code	Rubric	Initiator	Lot	Ref	Number	Revision
9 3 M	0 4 0 7	A A C	6 0 L 1 1	D W G	90253	A

-Drawing shall be updated according to the comments on the GA drawing.
-Approval is subjected to the approval of coordination package between multi-discipline.

REVIEWED WITH COMMENT
MONORAILS PROJECT

All holes are 22mm U.N.O Length & Area & Weight per piece

Mark	Profile	Grade	QTY	Length	Area	Weight
FP38	FLT30*400	S355J2N	2	4050.1	3.46	365.5

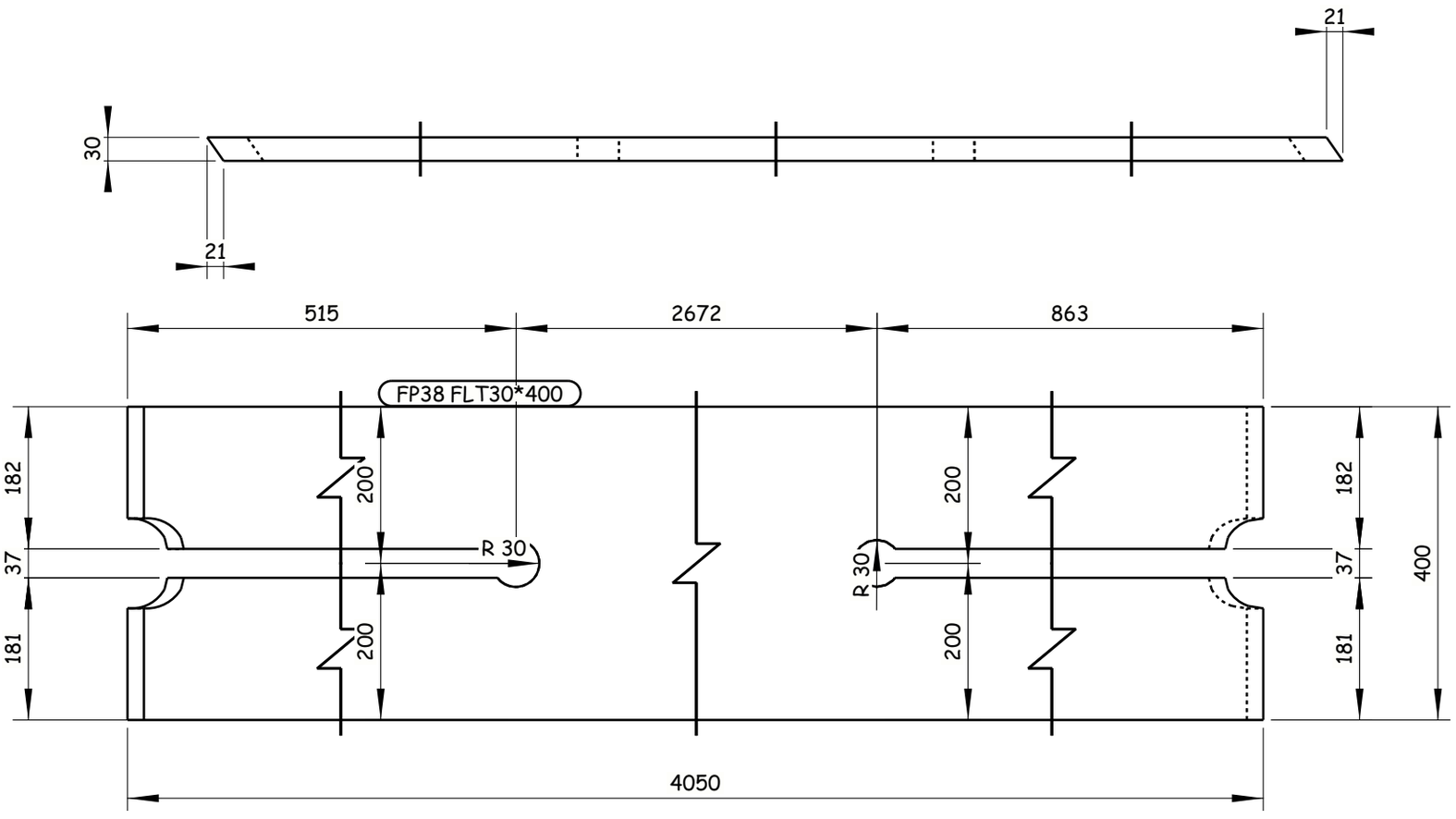

2 REQUIRED AS DRAWN E.SH FP38

GENERAL NOTES:
1. ALL DIMENSIONS ARE IN MILLIMETERS UNLESS OTHERWISE SPECIFIED.
2. LEVELS ARE IN METERS
3. DESIGN SERVICE LIFE OF 100 YEARS.
4. FLANGES OF TOP AND BOTTOM CHORDS TO BE SUPPLIED WITH IMPROVED THROUGH THICKNESS PROPERTIES Z25 ACCORDING TO EN10164.

REFERENCE DRAWINGS

1	93M-0407-SEN-6OL11-END-10118-B PAGE 01:17
2	
3	
4	
5	
6	
7	
8	
9	
10	
11	

6TH OF OCTOBER CITY RAIL TRANSIT MONORAIL &
NEW CAPITAL CITY RAIL TRANSIT MONORAIL

The Authority
Hill International
Authority Consultant

Main Contractor

Designer

CONTRACTOR CONSULTANT :
ENGINEERING HOUSE FOR CONSULTANCY

SCALE: AS SHOWN | SHOP DRAWING | DATE: 20.11.2024

REV	DATE	BY	DESCRIPTION	CHK	APD
A	20-11-24	E.SH	ISSUE FOR APPROVAL	A.SH	M.M

6 October Monorail
Engineering Unit
Valid For Construction

DRAWING TITLE:
6TH OF OCTOBER MONORAIL
SHOP DRAWING FOR BRIDGE 6OL11-37
STEEL TRUSS (II).
FP38

Project Code	Rubric	Initiator	Lot	Ref	Number	Revision
93M	0407	AAC	60L11	DWG	90254	A

Tekla structures

-Drawing shall be updated according to the comments on the GA drawing.
-Approval is subjected to the approval of coordination package between multi-discipline.

REVIEWED WITH COMMENT
MONORAILS PROJECT

All holes are 22mm U.N.O Length & Area & Weight per piece						
FP39	FLT20*400	S355J2N	2	4021.1	3.32	242.3
Mark	Profile	Grade	QTY	Length	Area	Weight

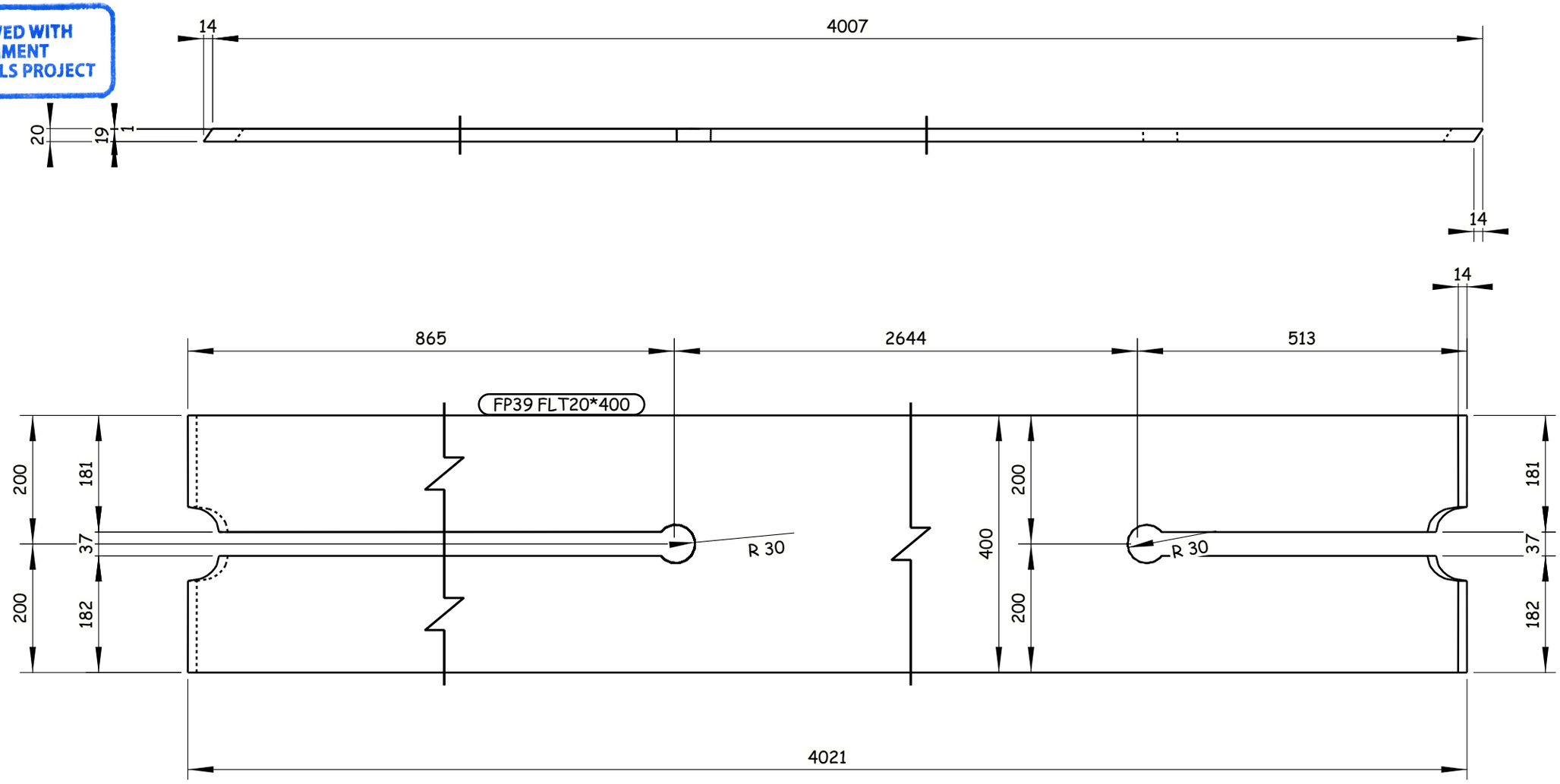

2 REQUIRED AS DRAWN E.SH FP39

Tekla structures

GENERAL NOTES:

1. ALL DIMENSIONS ARE IN MILLIMETERS UNLESS OTHERWISE SPECIFIED.
2. LEVELS ARE IN METERS
3. DESIGN SERVICE LIFE OF 100 YEARS.
4. FLANGES OF TOP AND BOTTOM CHORDS TO BE SUPPLIED WITH IMPROVED THROUGH THICKNESS PROPERTIES Z25 ACCORDING TO EN10164.

REFERENCE DRAWINGS

1	93M-0407-SEN-6OL11-END-10118-B PAGE 01:17
2	
3	
4	
5	
6	
7	
8	
9	
10	
11	

6TH OF OCTOBER CITY RAIL TRANSIT MONORAIL &
NEW CAPITAL CITY RAIL TRANSIT MONORAIL

The Authority — Hill International Authority Consultant — Main Contractor — Designer

CONTRACTOR CONSULTANT : ENGINEERING HOUSE FOR CONSULTANCY

6 October Monorail Engineering Unit
Valid For Construction

SCALE: AS SHOWN | SHOP DRAWING | DATE: 20.11.2024

REV	DATE	BY	DESCRIPTION	CHK	APD
A	20-11-24	E.SH	ISSUE FOR APPROVAL	A.SH	M.M

DRAWING TITLE:
6TH OF OCTOBER MONORAIL
SHOP DRAWING FOR BRIDGE 6OL11-37
STEEL TRUSS (II).
FP39

Project Code	Rubric	Initiator	Lot	Ref	Number	Revision
9 3 M	0 4 0 7	A A C	6 0 L 1 1	D W G	90255	A

-Drawing shall be updated according to the comments on the GA drawing.
-Approval is subjected to the approval of coordination package between multi-discipline.

REVIEWED WITH COMMENT
MONORAILS PROJECT

All holes are 22mm U.N.O Length & Area & Weight per piece

Mark	Profile	Grade	QTY	Length	Area	Weight
FP40	PL45*720	S355K2N	2	9079.0	13.98	2247.7

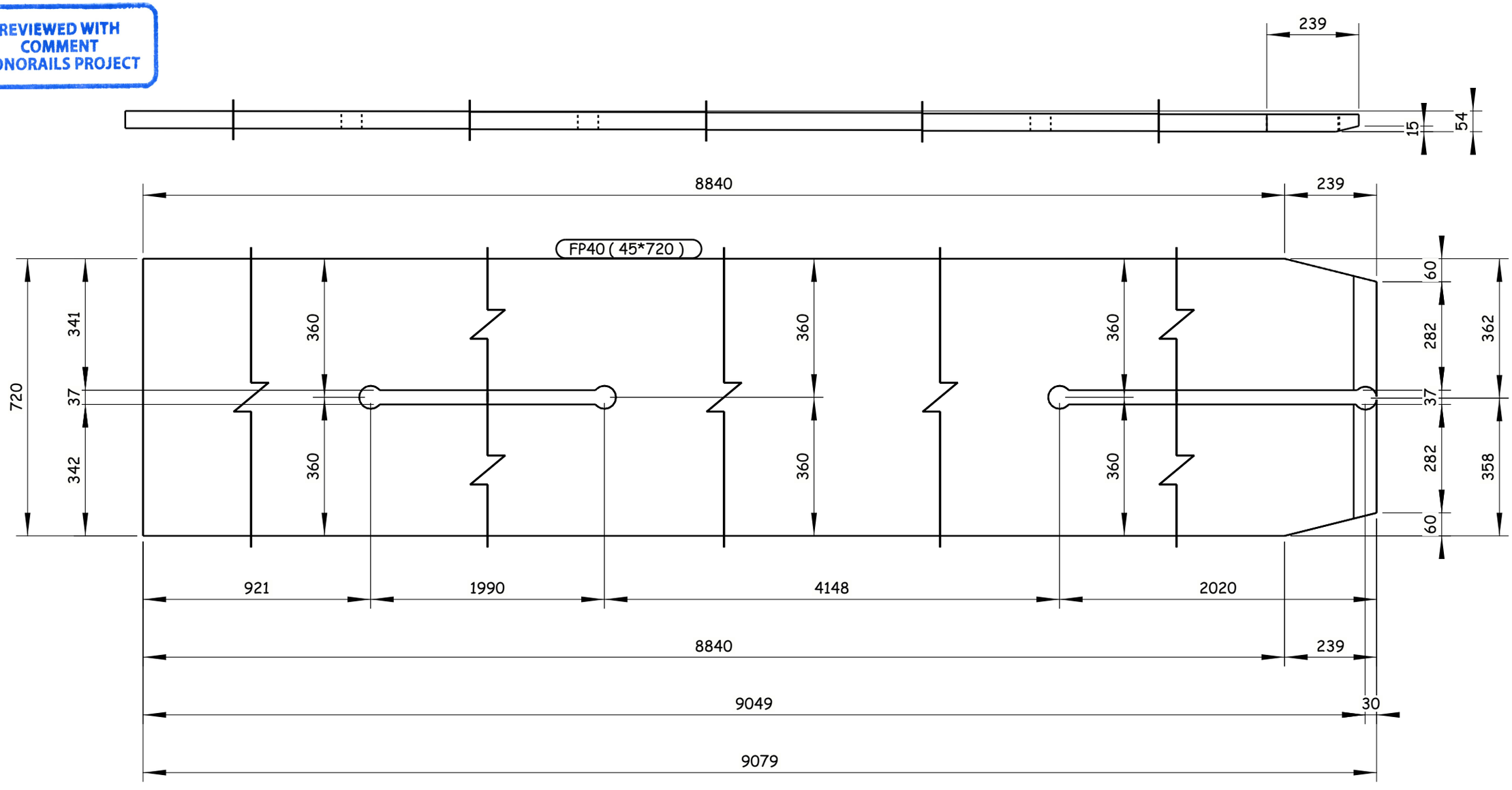

2 REQUIRED AS DRAWN E.SH FP40

GENERAL NOTES:

1. ALL DIMENSIONS ARE IN MILLIMETERS UNLESS OTHERWISE SPECIFIED.
2. LEVELS ARE IN METERS
3. DESIGN SERVICE LIFE OF 100 YEARS.
4. FLANGES OF TOP AND BOTTOM CHORDS TO BE SUPPLIED WITH IMPROVED THROUGH THICKNESS PROPERTIES Z25 ACCORDING TO EN10164.

REFERENCE DRAWINGS

1	93M-0407-SEN-6OL11-END-10118-B PAGE 01:17
2	
3	
4	
5	
6	
7	
8	
9	
10	
11	

6TH OF OCTOBER CITY RAIL TRANSIT MONORAIL &
NEW CAPITAL CITY RAIL TRANSIT MONORAIL

The Authority — Hill International Authority Consultant — Main Contractor — Designer

CONTRACTOR / CONSULTANT: ENGINEERING HOUSE FOR CONSULTANCY

6 October Monorail Engineering Unit
Valid For Construction

SCALE	SHOP DRAWING	DATE
AS SHOWN		20.11.2024

REV	DATE	BY	DESCRIPTION	CHK	APD
A	20-11-24	E.SH	ISSUE FOR APPROVAL	A.SH	M.M

DRAWING TITLE:
6TH OF OCTOBER MONORAIL
SHOP DRAWING FOR BRIDGE 6OL11-37
STEEL TRUSS (II).
FP40

Project Code	Rubric	Initiator	Lot	Ref	Number	Revision
93M	0407	AAC	60LL11	DWG	90256	A

Tekla structures

-Drawing shall be updated according to the comments on the GA drawing.
-Approval is subjected to the approval of coordination package between multi-discipline.

REVIEWED WITH COMMENT
MONORAILS PROJECT

All holes are 22mm U.N.O Length & Area & Weight per piece

Mark	Profile	Grade	QTY	Length	Area	Weight
FP41	FLT40*600	S355J2N	1	23419.6	30.08	4308.0

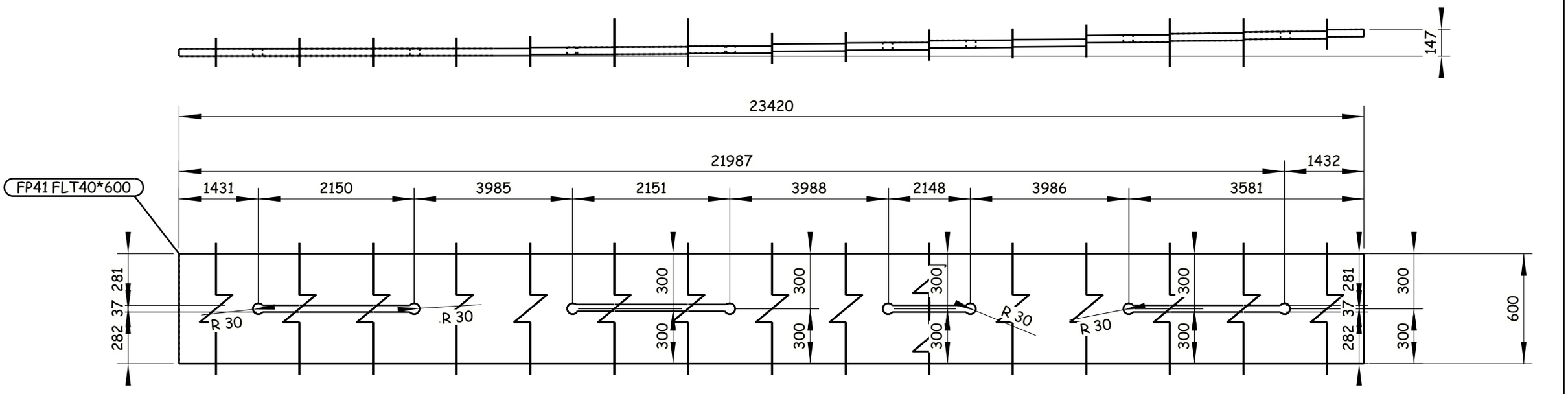

1 REQUIRED AS DRAWN E.SH FP41

GENERAL NOTES:

1. ALL DIMENSIONS ARE IN MILLIMETERS UNLESS OTHERWISE SPECIFIED.
2. LEVELS ARE IN METERS
3. DESIGN SERVICE LIFE OF 100 YEARS.
4. FLANGES OF TOP AND BOTTOM CHORDS TO BE SUPPLIED WITH IMPROVED THROUGH THICKNESS PROPERTIES Z25 ACCORDING TO EN10164.

REFERENCE DRAWINGS

1	93M-0407-SEN-6OL11-END-10118-B PAGE 01:17
2	
3	
4	
5	
6	
7	
8	
9	
10	
11	

6TH OF OCTOBER CITY RAIL TRANSIT MONORAIL &
NEW CAPITAL CITY RAIL TRANSIT MONORAIL

The Authority — Hill International Authority Consultant
ORASCOM CONSTRUCTION — BOMBARDIER — Main Contractor
SENER — SHAKER CONSULTING GROUP — Designer

CONTRACTOR / CONSULTANT : ENGINEERING HOUSE FOR CONSULTANCY

SCALE	CHK'D DRWG NO	DATE
AS SHOWN		20.11.2024

REV	DATE	BY	DESCRIPTION	CHK	APD
A	20-11-24	E.SH	ISSUE FOR APPROVAL	A.SH	M.M

6 October Monorail
Engineering Unit
Valid For Construction

DRAWING TITLE:
6TH OF OCTOBER MONORAIL
SHOP DRAWING FOR BRIDGE 6OL11-37
STEEL TRUSS (II).
FP41

Project Code	Rubric	Initiator	Lot	Ref	Number	Revision
93M	0407	AAC	60L11	DWG	90257	A

Tekla structures

-Drawing shall be updated according to the comments on the GA drawing.
-Approval is subjected to the approval of coordination package between multi-discipline.

REVIEWED WITH COMMENT
MONORAILS PROJECT

All holes are 22mm U.N.O Length & Area & Weight per piece

Mark	Profile	Grade	QTY	Length	Area	Weight
FP42	FLT40*600	S355J2N	1	20912.6	26.88	3824.3

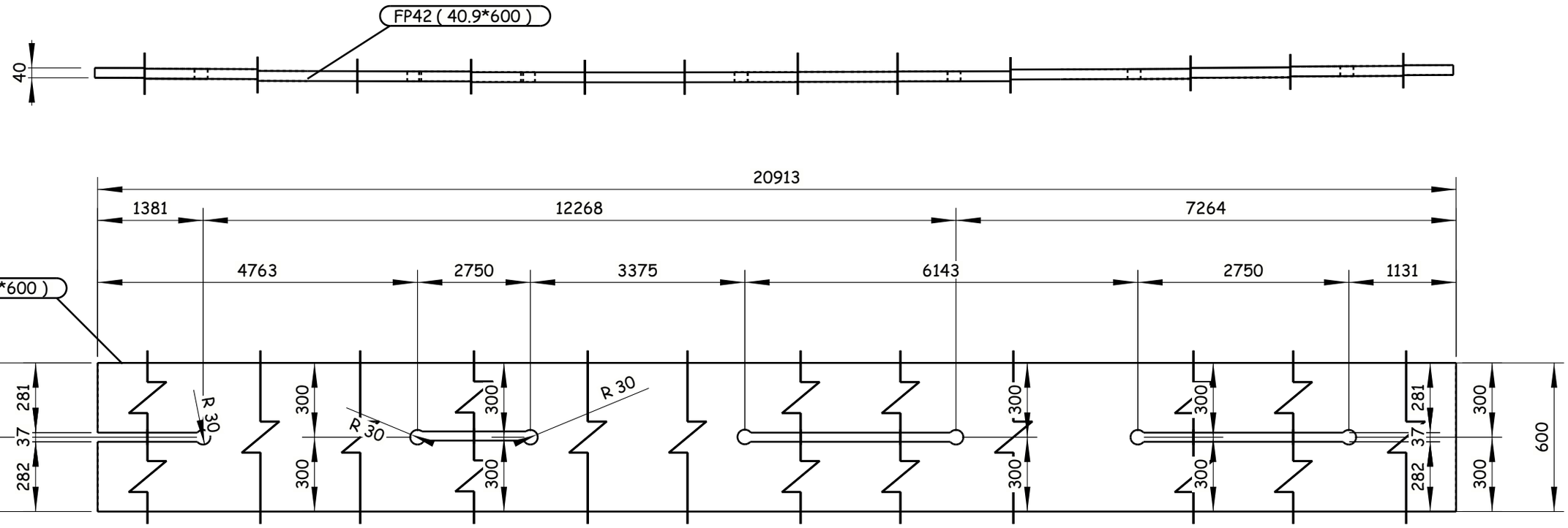

1 REQUIRED AS DRAWN E.SH FP42

GENERAL NOTES:

1. ALL DIMENSIONS ARE IN MILLIMETERS UNLESS OTHERWISE SPECIFIED.
2. LEVELS ARE IN METERS
3. DESIGN SERVICE LIFE OF 100 YEARS.
4. FLANGES OF TOP AND BOTTOM CHORDS TO BE SUPPLIED WITH IMPROVED THROUGH THICKNESS PROPERTIES Z25 ACCORDING TO EN10164.

REFERENCE DRAWINGS

1	93M-0407-SEN-6OL11-END-10118-B PAGE 01:17
2	
3	
4	
5	
6	
7	
8	
9	
10	
11	

6TH OF OCTOBER CITY RAIL TRANSIT MONORAIL &
NEW CAPITAL CITY RAIL TRANSIT MONORAIL

The Authority — Hill International — Authority Consultant
Main Contractor
Designer

CONTRACTOR & CONSULTANT:
ENGINEERING HOUSE FOR CONSULTANCY

6 October Monorail
Engineering Unit
Valid For Cönstruction

SCALE	SHOP DRAWING	DATE
AS SHOWN		20.11.2024

REV.	DATE	BY	DESCRIPTION	CHK	APD.
A	20-11-24	E.SH	ISSUE FOR APPROVAL	A.SH	M.M

DRAWING TITLE:
6TH OF OCTOBER MONORAIL
SHOP DRAWING FOR BRIDGE 6OL11-37
STEEL TRUSS (II).
FP42

Project Code	Rubric	Initiator	Lot	Ref	Number	Revision
93M	0407	AAC	60L11	DWG	90258	A

Tekla structures

All holes are 22mm U.N.O Length & Area & Weight per piece						
FP43	FLT40*600	S355J2N	2	2501.4	3.26	454.8
Mark	Profile	Grade	QTY	Length	Area	Weight

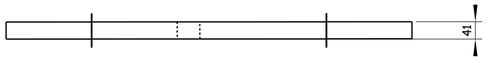

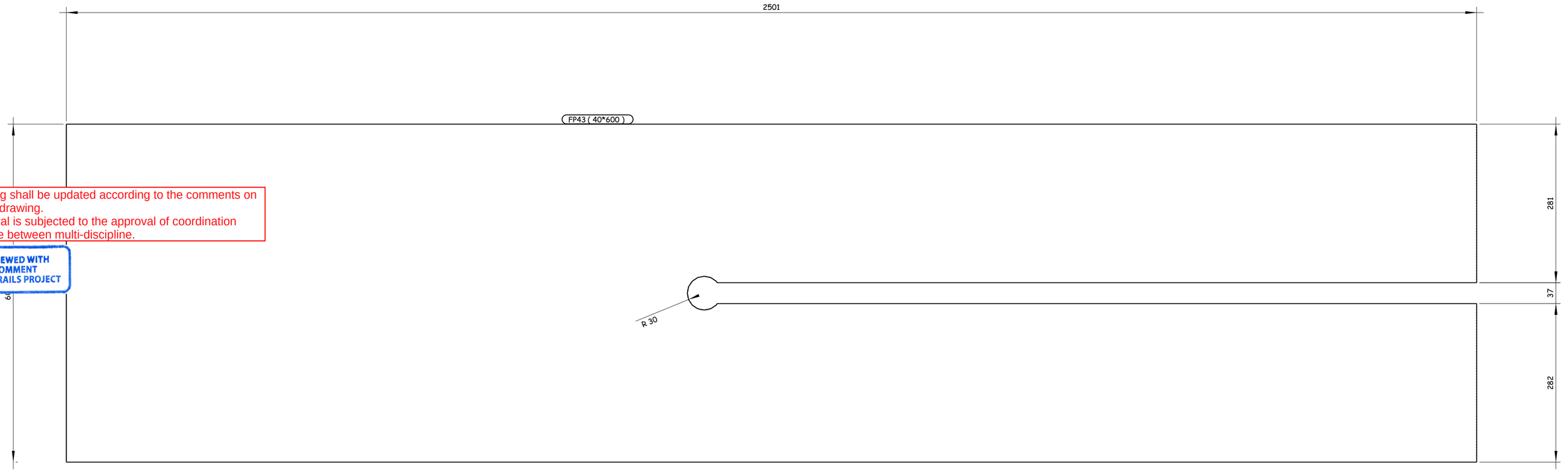

-Drawing shall be updated according to the comments on the GA drawing.
-Approval is subjected to the approval of coordination package between multi-discipline.

REVIEWED WITH COMMENT MONORAILS PROJECT

2 REQUIRED AS DRAWN E.SH FP43

6 October Monorail Engineering Unit Valid For Construction

GENERAL NOTES:

1. ALL DIMENSIONS ARE IN MILLIMETERS UNLESS OTHERWISE SPECIFIED.
2. LEVELS ARE IN METERS
3. DESIGN SERVICE LIFE OF 100 YEARS.
4. FLANGES OF TOP AND BOTTOM CHORDS TO BE SUPPLIED WITH IMPROVED THROUGH THICKNESS PROPERTIES Z25 ACCORDING TO EN10164.

REFERENCE DRAWINGS

1	93M-0407-SEN-6OL11-END-10118-B PAGE 01:17
2	
3	
4	
5	
6	
7	
8	
9	
10	
11	

6TH OF OCTOBER CITY RAIL TRANSIT MONORAIL &
NEW CAPITAL CITY RAIL TRANSIT MONORAIL

The Authority — Authority Consultant: Hill International — Main Contractor: ORASCOM CONSTRUCTION — Designer: BOMBARDIER, SENER, SHAKER

CONTRACTOR
CONSULTANT:
ENGINEERING HOUSE FOR CONSULTANCY

SCALE: AS SHOWN
SHOP DRAWING
DATE: 20.11.2024

REV	DATE	BY	DESCRIPTION	CHK	APD
A	20-11-24	E.SH	ISSUE FOR APPROVAL	A.SH	M.M

DRAWING TITLE:
6TH OF OCTOBER MONORAIL
SHOP DRAWING FOR BRIDGE 6OL11-37
STEEL TRUSS (II).
FP43

Project Code	Rubric	Initiator	Lot	Ref	Number	Revision
9 3 M	0 4 0 7	A A C	6 0 L 1 1	D W G	90259	A

Tekla structures

-Drawing shall be updated according to the comments on the GA drawing.
-Approval is subjected to the approval of coordination package between multi-discipline.

REVIEWED WITH COMMENT
MONORAILS PROJECT

All holes are 22mm U.N.O Length & Area & Weight per piece

Mark	Profile	Grade	QTY	Length	Area	Weight
FP44	FLT20*400	S355J2N	4	3036.1	2.52	184.5

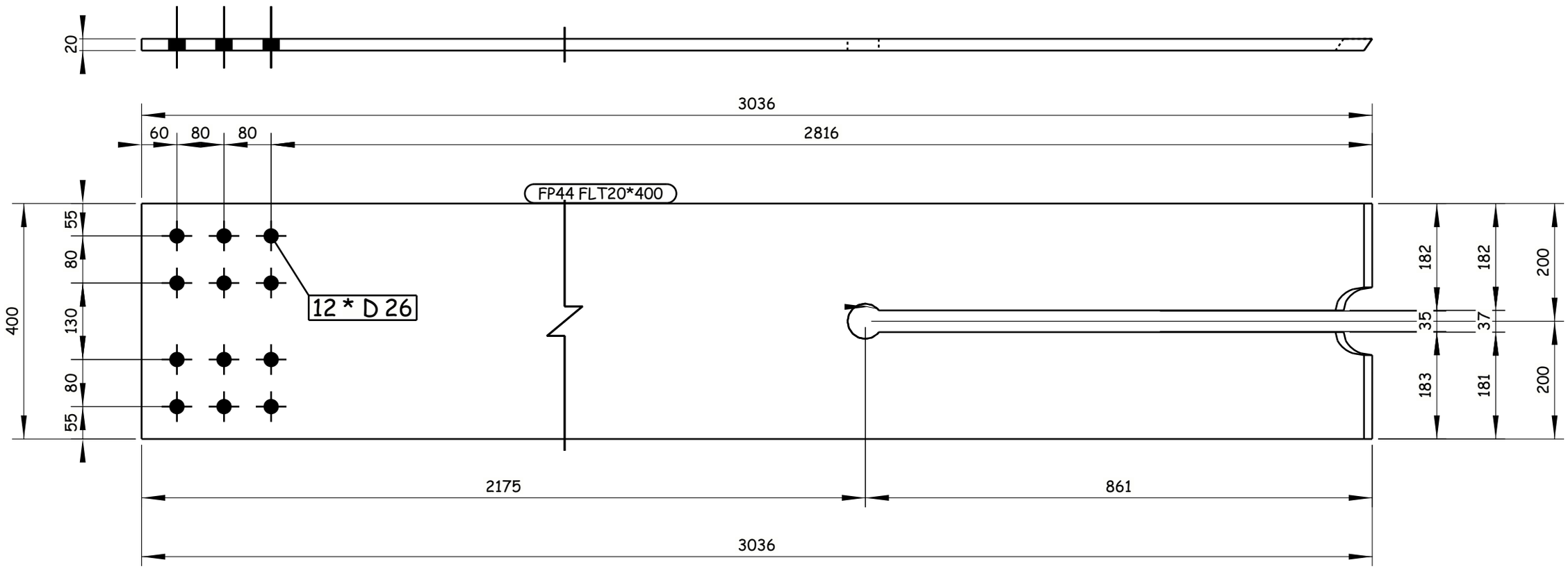

4 REQUIRED AS DRAWN E.SH FP44

GENERAL NOTES:

1. ALL DIMENSIONS ARE IN MILLIMETERS UNLESS OTHERWISE SPECIFIED.
2. LEVELS ARE IN METERS
3. DESIGN SERVICE LIFE OF 100 YEARS.
4. FLANGES OF TOP AND BOTTOM CHORDS TO BE SUPPLIED WITH IMPROVED THROUGH THICKNESS PROPERTIES Z25 ACCORDING TO EN10164.

REFERENCE DRAWINGS

1	93M-0407-SEN-6OL11-END-10118-B PAGE 01:17
2	
3	
4	
5	
6	
7	
8	
9	
10	
11	

6TH OF OCTOBER CITY RAIL TRANSIT MONORAIL &
NEW CAPITAL CITY RAIL TRANSIT MONORAIL

The Authority — Authority Consultant: Hill International — Main Contractor: ORASCOM CONSTRUCTION — Designer: BOMBARDIER, SENER, SHAKER

CONTRACTOR/ CONSULTANT: ENGINEERING HOUSE FOR CONSULTANCY

6 October Monorail
Engineering Unit
Valid For Construction

SCALE: AS SHOWN | SHOP DRAWING | DATE: 20.11.2024

REV	DATE	BY	DESCRIPTION	CHK	APD
A	20-11-24	E.SH	ISSUE FOR APPROVAL	A.SH	M.M

DRAWING TITLE:
6TH OF OCTOBER MONORAIL
SHOP DRAWING FOR BRIDGE 6OL11-37
STEEL TRUSS (II).
FP44

Project Code	Rubric	Initiator	Lot	Ref	Number	Revision
93M	0407	AAC	60L11	DWG	90260	A

Tekla structures

-Drawing shall be updated according to the comments on the GA drawing.
-Approval is subjected to the approval of coordination package between multi-discipline.

REVIEWED WITH COMMENT
MONORAILS PROJECT

All holes are 22mm U.N.O Length & Area & Weight per piece

Mark	Profile	Grade	QTY	Length	Area	Weight
FP45	FLT20*400	S355J2N	4	2771.6	2.31	169.5

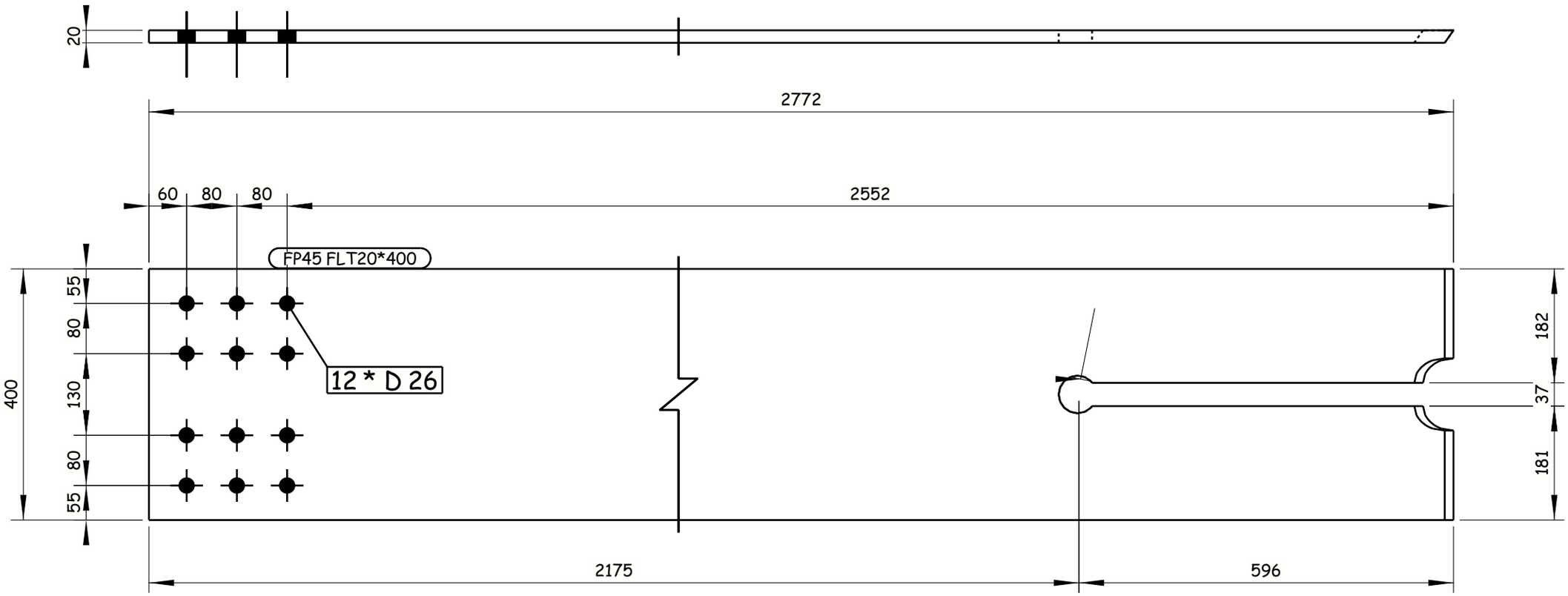

4 REQUIRED AS DRAWN E.SH FP45

Tekla structures

GENERAL NOTES:

1. ALL DIMENSIONS ARE IN MILLIMETERS UNLESS OTHERWISE SPECIFIED.
2. LEVELS ARE IN METERS
3. DESIGN SERVICE LIFE OF 100 YEARS.
4. FLANGES OF TOP AND BOTTOM CHORDS TO BE SUPPLIED WITH IMPROVED THROUGH THICKNESS PROPERTIES Z25 ACCORDING TO EN10164.

REFERENCE DRAWINGS

1	93M-0407-SEN-6OL11-END-10118-B PAGE 01:17
2	
3	
4	
5	
6	
7	
8	
9	
10	
11	

6TH OF OCTOBER CITY RAIL TRANSIT MONORAIL &
NEW CAPITAL CITY RAIL TRANSIT MONORAIL

The Authority — Hill International Authority Consultant — Main Contractor — Designer

CONTRACTOR CONSULTANT: ENGINEERING HOUSE FOR CONSULTANCY

6 October Monorail Engineering Unit
Valid For Construction

SCALE	SHOP DRAWING	DATE
AS SHOWN		20.11.2024

REV	DATE	BY	DESCRIPTION	CHK	APD
A	20-11-24	E.SH	ISSUE FOR APPROVAL	A.SH	M.M

DRAWING TITLE:
6TH OF OCTOBER MONORAIL
SHOP DRAWING FOR BRIDGE 6OL11-37
STEEL TRUSS (II).
FP45

Project Code	Rubric	Initiator	Lot	Ref	Number	Revision
93M	04	07	AAC	60	L11	DWG	90261	A

-Drawing shall be updated according to the comments on the GA drawing.
-Approval is subjected to the approval of coordination package between multi-discipline.

REVIEWED WITH COMMENT MONORAILS PROJECT

All holes are 22mm U.N.O Length & Area & Weight per piece						
FP51	FLT20*400	S355J2N	1	4031.7	3.33	242.9
Mark	Profile	Grade	QTY	Length	Area	Weight

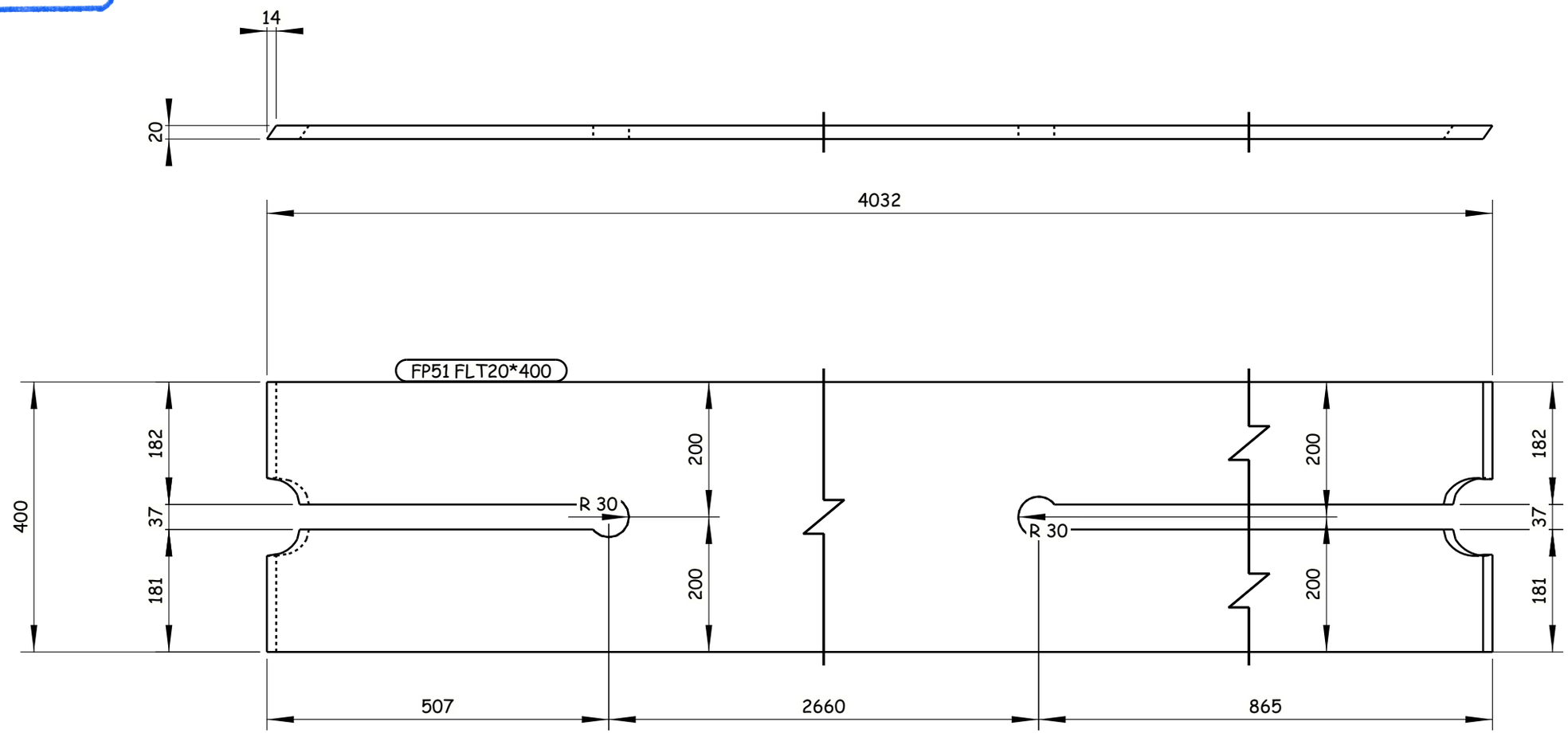

1 REQUIRED AS DRAWN E.SH FP51

6 October Monorail Engineering Unit
Valid For Construction

GENERAL NOTES:
1. ALL DIMENSIONS ARE IN MILLIMETERS UNLESS OTHERWISE SPECIFIED.
2. LEVELS ARE IN METERS
3. DESIGN SERVICE LIFE OF 100 YEARS.
4. FLANGES OF TOP AND BOTTOM CHORDS TO BE SUPPLIED WITH IMPROVED THROUGH THICKNESS PROPERTIES Z25 ACCORDING TO EN10164.

REFERENCE DRAWINGS

1	93M-0407-SEN-6OL11-END-10118-B PAGE 01:17
2	
3	
4	
5	
6	
7	
8	
9	
10	
11	

6TH OF OCTOBER CITY RAIL TRANSIT MONORAIL & NEW CAPITAL CITY RAIL TRANSIT MONORAIL

وزارة النقل MINISTRY OF TRANSPORT The Authority
Hill International Authority Consultant
ORASCOM CONSTRUCTION
BOMBARDIER Main Contractor
SENER SHAKER CONSULTANCY GROUP Designer

CONTRACTOR CONSULTANT: EHC ENGINEERING HOUSE FOR CONSULTANCY

SCALE AS SHOWN	SHOP DRAWING	DATE 20.11.2024

REV	DATE	BY	DESCRIPTION	CHK	APD
A	20-11-24	E.SH	ISSUE FOR APPROVAL	A.SH	M.M

DRAWING TITLE:
6TH OF OCTOBER MONORAIL
SHOP DRAWING FOR BRIDGE 6OL11-37
STEEL TRUSS (II).
FP51

Project Code	Rubric	Initiator	Lot	Ref	Number	Revision
93M	0407	AAC	6OL11	DWG	90262	A

Tekla structures

-Drawing shall be updated according to the comments on the GA drawing.
-Approval is subjected to the approval of coordination package between multi-discipline.

REVIEWED WITH COMMENT
MONORAILS PROJECT

All holes are 22mm U.N.O Length & Area & Weight per piece

Mark	Profile	Grade	QTY	Length	Area	Weight
FP52	FLT35*400	S355J2N	3	4010.1	3.48	416.6

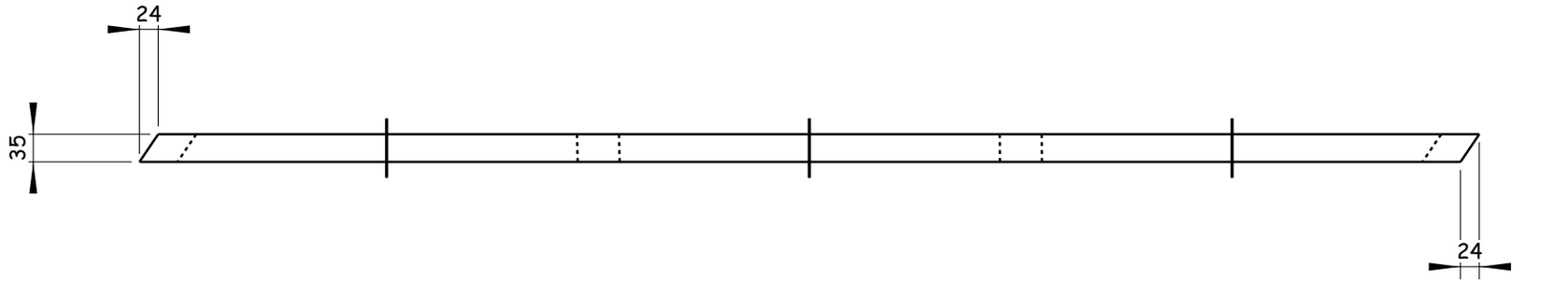

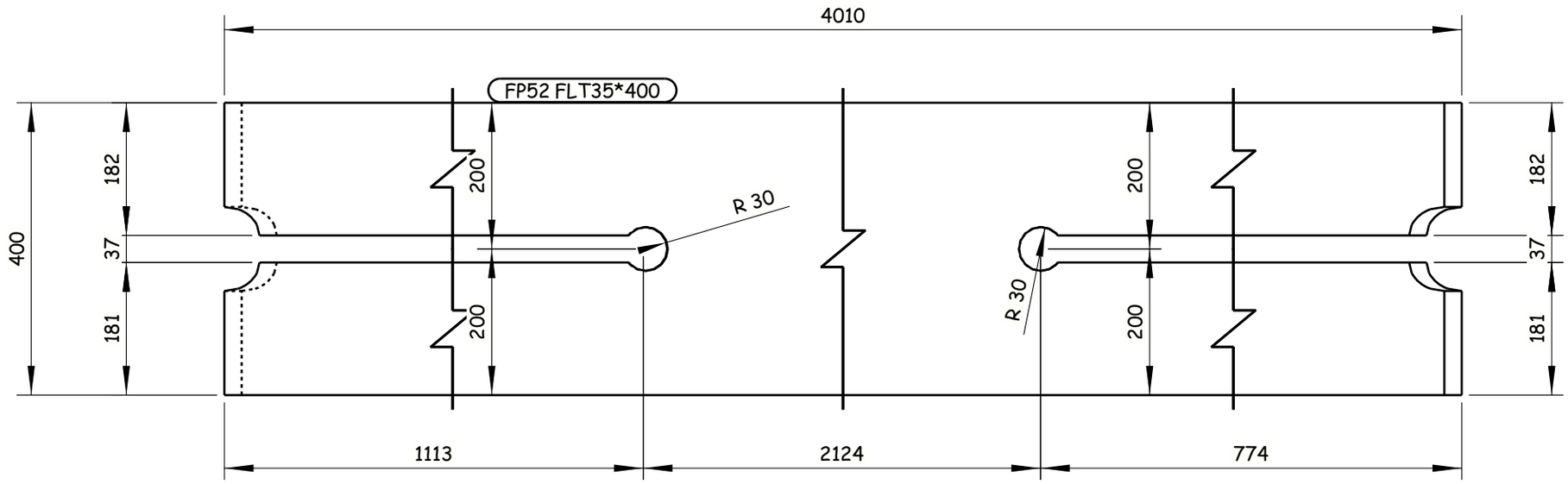

3 REQUIRED AS DRAWN E.SH FP52

Tekla structures

GENERAL NOTES:

1. ALL DIMENSIONS ARE IN MILLIMETERS UNLESS OTHERWISE SPECIFIED.
2. LEVELS ARE IN METERS
3. DESIGN SERVICE LIFE OF 100 YEARS.
4. FLANGES OF TOP AND BOTTOM CHORDS TO BE SUPPLIED WITH IMPROVED THROUGH THICKNESS PROPERTIES Z25 ACCORDING TO EN10164.

REFERENCE DRAWINGS

1	93M-0407-SEN-6OL11-END-10118-B PAGE 01:17
2	
3	
4	
5	
6	
7	
8	
9	
10	
11	

6TH OF OCTOBER CITY RAIL TRANSIT MONORAIL &
NEW CAPITAL CITY RAIL TRANSIT MONORAIL

The Authority — Hill International Authority Consultant — ORASCOM CONSTRUCTION — BOMBARDIER — Main Contractor — SENER — SHAKER CONSULTANCY GROUP — Designer

CONTRACTOR & CONSULTANT : EHC ENGINEERING HOUSE FOR CONSULTANCY

SCALE	SHOP DRAWING	DATE
AS SHOWN		20.11.2024

REV	DATE	BY	DESCRIPTION	CHK	APD
A	20-11-24	E.SH	ISSUE FOR APPROVAL	A.SH	M.M

6 October Monorail
Engineering Unit
Valid For Construction

DRAWING TITLE:
6TH OF OCTOBER MONORAIL
SHOP DRAWING FOR BRIDGE 6OL11-37
STEEL TRUSS (II).
FP52

Project Code	Rubric	Initiator	Lot	Ref	Number	Revision
9 3 M	0 4 0 7	A A C	6 0 L 1 1	D W G	90263	A

-Drawing shall be updated according to the comments on the GA drawing.
-Approval is subjected to the approval of coordination package between multi-discipline.

REVIEWED WITH COMMENT
MONORAILS PROJECT

All holes are 22mm U.N.O Length & Area & Weight per piece

Mark	Profile	Grade	QTY	Length	Area	Weight
FP53	FLT20*400	S355J2N	1	4018.8	3.32	242.1

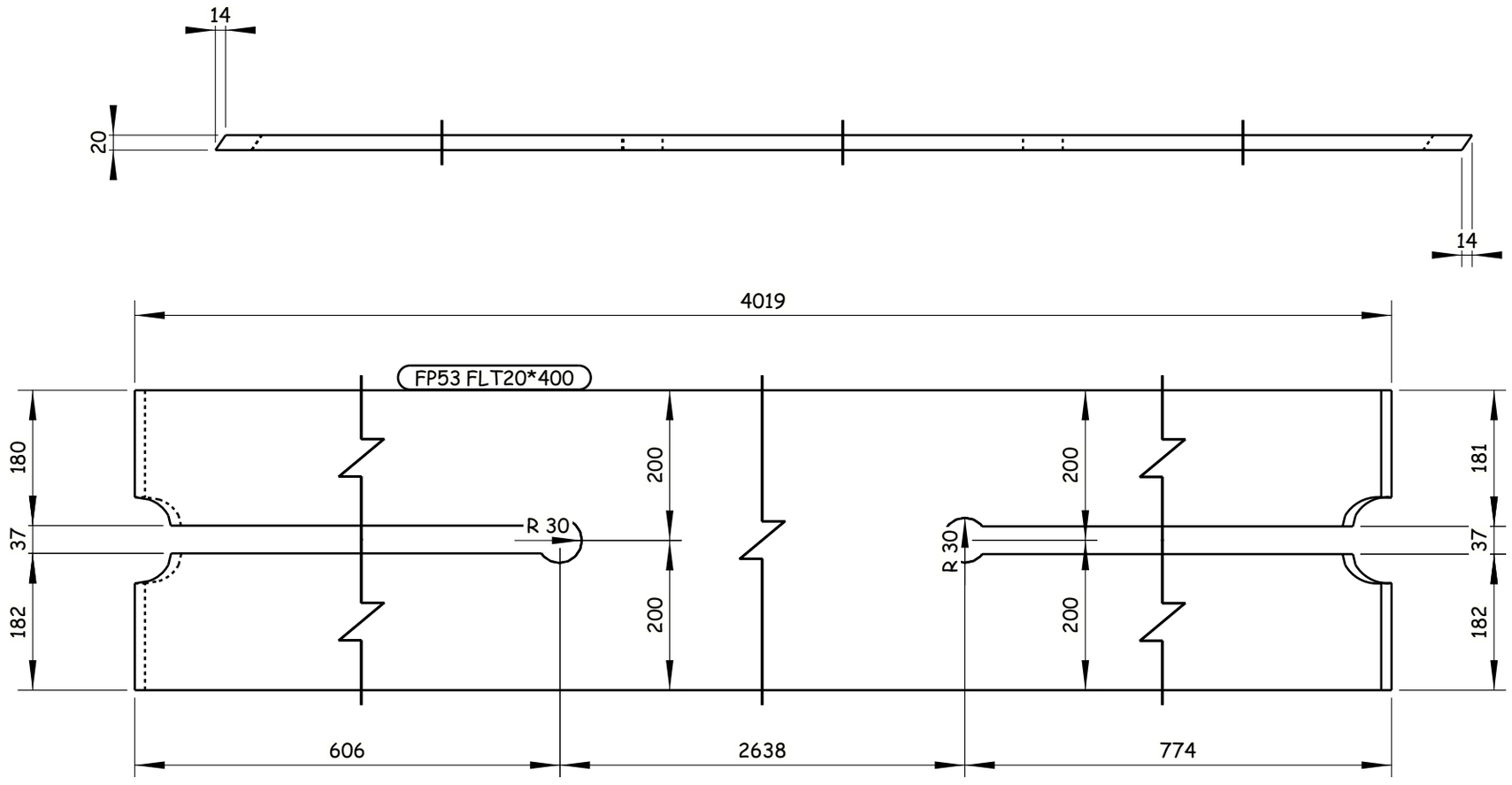

1 REQUIRED AS DRAWN E.SH FP53

6 October Monorail
Engineering Unit
Valid For Construction

GENERAL NOTES:

1. ALL DIMENSIONS ARE IN MILLIMETERS UNLESS OTHERWISE SPECIFIED.
2. LEVELS ARE IN METERS
3. DESIGN SERVICE LIFE OF 100 YEARS.
4. FLANGES OF TOP AND BOTTOM CHORDS TO BE SUPPLIED WITH IMPROVED THROUGH THICKNESS PROPERTIES Z25 ACCORDING TO EN10164.

REFERENCE DRAWINGS

1	93M-0407-SEN-6OL11-END-10118-B PAGE 01:17
2	
3	
4	
5	
6	
7	
8	
9	
10	
11	

6TH OF OCTOBER CITY RAIL TRANSIT MONORAIL &
NEW CAPITAL CITY RAIL TRANSIT MONORAIL

The Authority
Hill International
Authority Consultant

Main Contractor

Designer

CONTRACTOR CONSULTANT :
ENGINEERING HOUSE FOR CONSULTANCY

SCALE AS SHOWN | SHOP DRAWING | DATE 20.11.2024

REV	DATE	BY	DESCRIPTION	CHK	APD
A	20-11-24	E.SH	ISSUE FOR APPROVAL	A.SH	M.M

DRAWING TITLE:
6TH OF OCTOBER MONORAIL
SHOP DRAWING FOR BRIDGE 6OL11-37
STEEL TRUSS (II).
FP53

Project Code	Rubric	Initiator	Lot	Ref	Number	Revision
93M	0407	AAC	60L11	DWG	90264	A

Tekla structures

-Drawing shall be updated according to the comments on the GA drawing.
-Approval is subjected to the approval of coordination package between multi-discipline.

REVIEWED WITH COMMENT
MONORAILS PROJECT

All holes are 22mm U.N.O Length & Area & Weight per piece

Mark	Profile	Grade	QTY	Length	Area	Weight
FP54	FLT20*400	S355J2N	3	4025.3	3.33	242.6

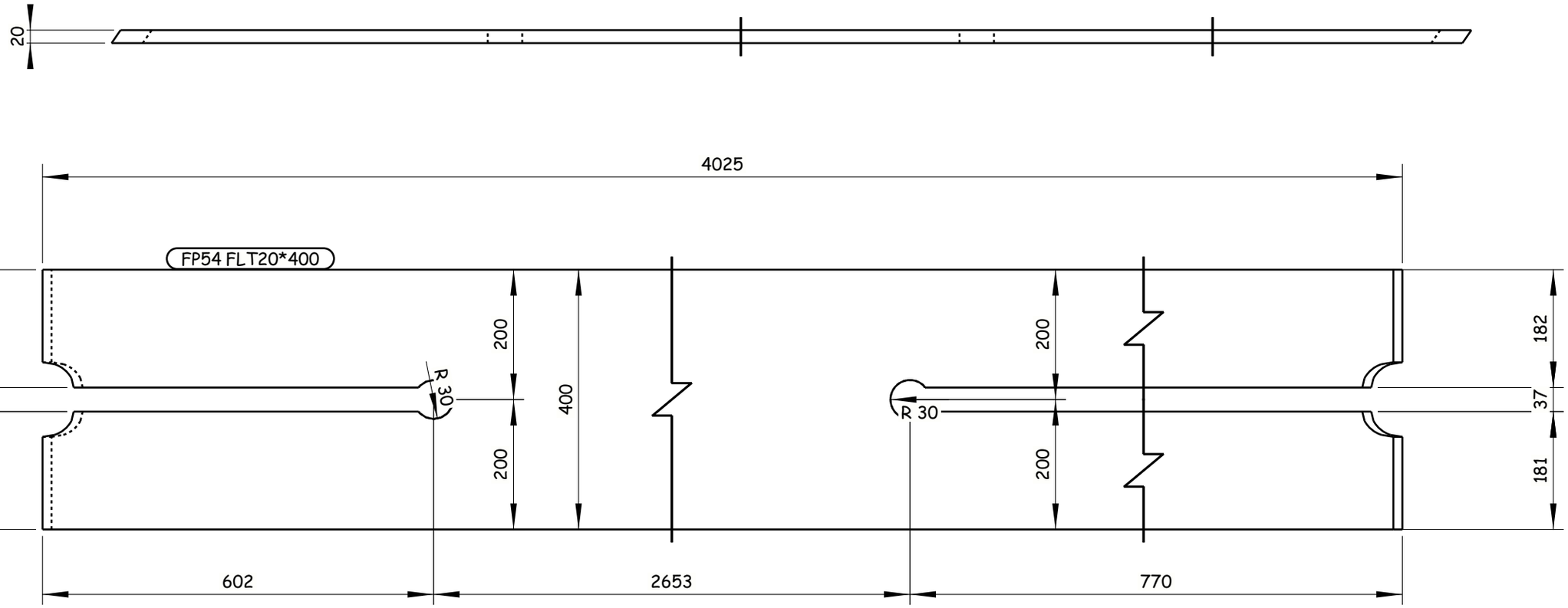

3 REQUIRED AS DRAWN E.SH FP54

Tekla structures

GENERAL NOTES:

1. ALL DIMENSIONS ARE IN MILLIMETERS UNLESS OTHERWISE SPECIFIED.
2. LEVELS ARE IN METERS
3. DESIGN SERVICE LIFE OF 100 YEARS.
4. FLANGES OF TOP AND BOTTOM CHORDS TO BE SUPPLIED WITH IMPROVED THROUGH THICKNESS PROPERTIES Z25 ACCORDING TO EN10164.

REFERENCE DRAWINGS

1	93M-0407-SEN-6OL11-END-10118-B PAGE 01:17
2	
3	
4	
5	
6	
7	
8	
9	
10	
11	

6TH OF OCTOBER CITY RAIL TRANSIT MONORAIL &
NEW CAPITAL CITY RAIL TRANSIT MONORAIL

The Authority
Hill International
Authority Consultant

Main Contractor

Designer

CONTRACTOR & CONSULTANT:
ENGINEERING HOUSE FOR CONSULTANCY

SCALE: AS SHOWN | CHD DRAWING | DATE: 20.11.2024

REV	DATE	BY	DESCRIPTION	CHK	APD
A	20-11-24	E.SH	ISSUE FOR APPROVAL	A.SH	M.M

6 October Monorail
Engineering Unit
Valid For Construction

DRAWING TITLE:
6TH OF OCTOBER MONORAIL
SHOP DRAWING FOR BRIDGE 6OL11-37
STEEL TRUSS (II).
FP54

Project Code	Rubric	Initiator	Lot	Ref	Number	Revision
93M	0407	AAC	60L11	DWG	90265	A

-Drawing shall be updated according to the comments on the GA drawing.
-Approval is subjected to the approval of coordination package between multi-discipline.

REVIEWED WITH COMMENT
MONORAILS PROJECT

All holes are 22mm U.N.O Length & Area & Weight per piece

Mark	Profile	Grade	QTY	Length	Area	Weight
FP55	FLT20*400	S355J2N	1	4021.4	3.32	242.4

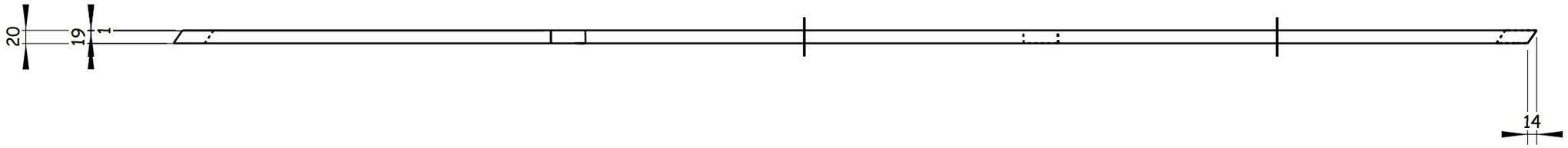

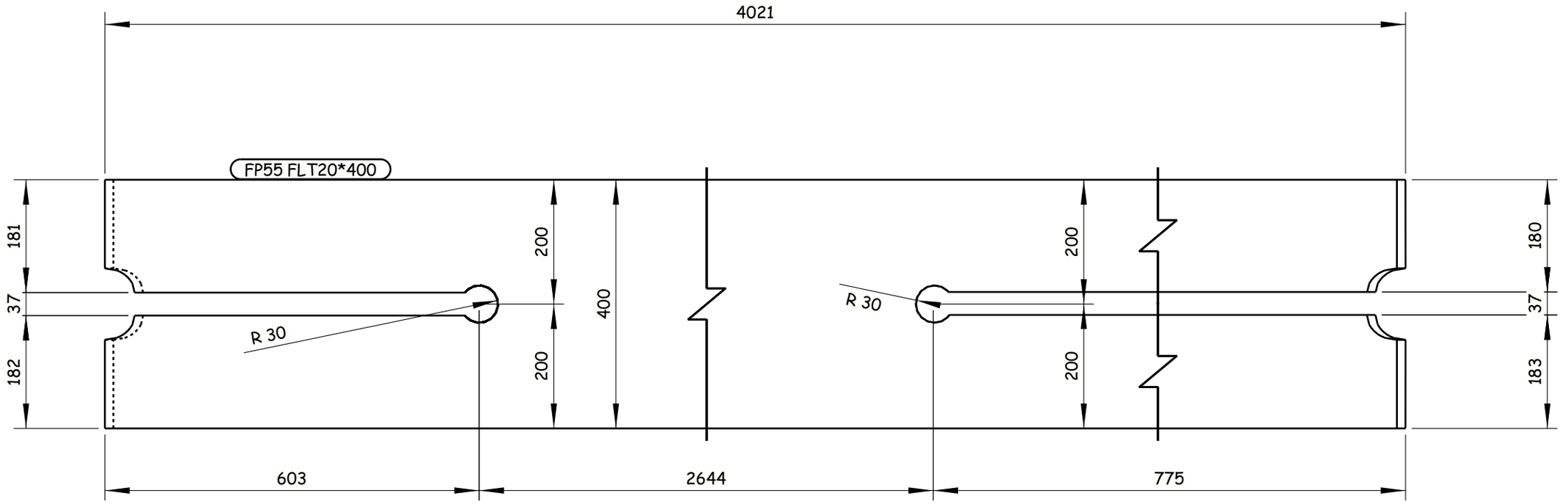

1 REQUIRED AS DRAWN E.SH FP55

6 October Monorail
Engineering Unit
Valid For Construction

Tekla structures

GENERAL NOTES:

1. ALL DIMENSIONS ARE IN MILLIMETERS UNLESS OTHERWISE SPECIFIED.
2. LEVELS ARE IN METERS
3. DESIGN SERVICE LIFE OF 100 YEARS.
4. FLANGES OF TOP AND BOTTOM CHORDS TO BE SUPPLIED WITH IMPROVED THROUGH THICKNESS PROPERTIES Z25 ACCORDING TO EN10164.

REFERENCE DRAWINGS

1	93M-0407-SEN-6OL11-END-10118-B PAGE 01:17
2	
3	
4	
5	
6	
7	
8	
9	
10	
11	

6TH OF OCTOBER CITY RAIL TRANSIT MONORAIL &
NEW CAPITAL CITY RAIL TRANSIT MONORAIL

The Authority
Hill International
Authority Consultant

ORASCOM CONSTRUCTION
Main Contractor

BOMBARDIER
SENER
SHAKER CONSULTANCY GROUP
Designer

CONTRACTOR & CONSULTANT:
EHC
ENGINEERING HOUSE FOR CONSULTANCY

SCALE	SHD DRAWING	DATE
AS SHOWN		20.11.2024

REV.	DATE	BY	DESCRIPTION	CHK	APD
A	20-11-24	E.SH	ISSUE FOR APPROVAL	A.SH	M.M

DRAWING TITLE:
6TH OF OCTOBER MONORAIL
SHOP DRAWING FOR BRIDGE 6OL11-37
STEEL TRUSS (II).
FP55

Project Code	Rubric	Initiator	Lot	Ref	Number	Revision
93M	0407	AAC	6OL11	DWG	90266	A

-Drawing shall be updated according to the comments on the GA drawing.
-Approval is subjected to the approval of coordination package between multi-discipline.

REVIEWED WITH COMMENT
MONORAILS PROJECT

All holes are 22mm U.N.O Length & Area & Weight per piece

Mark	Profile	Grade	QTY	Length	Area	Weight
FP56	FLT20*400	S355J2N	1	4021.4	3.32	242.3

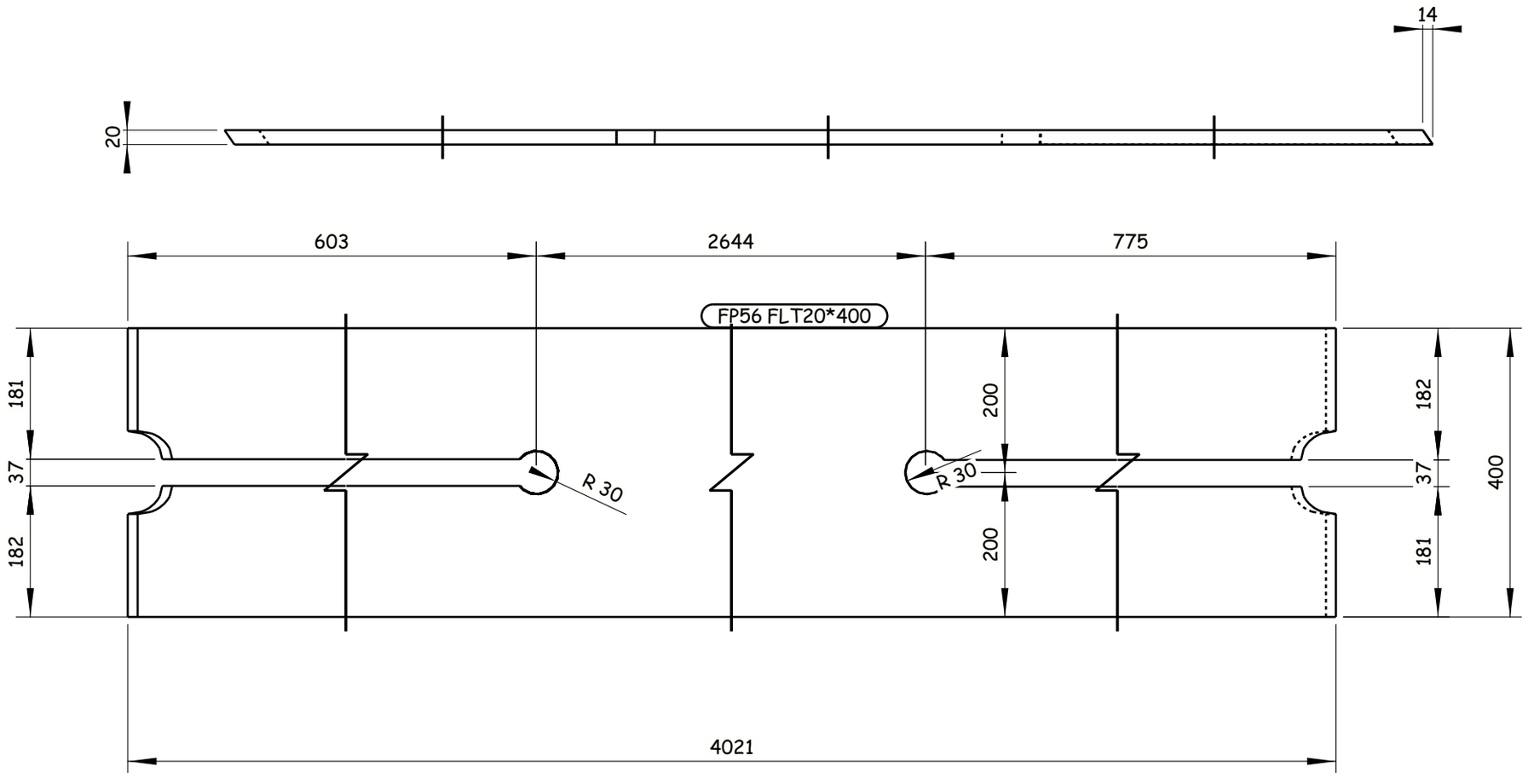

1 REQUIRED AS DRAWN E.SH FP56

Tekla structures

GENERAL NOTES:

1. ALL DIMENSIONS ARE IN MILLIMETERS UNLESS OTHERWISE SPECIFIED.
2. LEVELS ARE IN METERS
3. DESIGN SERVICE LIFE OF 100 YEARS.
4. FLANGES OF TOP AND BOTTOM CHORDS TO BE SUPPLIED WITH IMPROVED THROUGH THICKNESS PROPERTIES Z25 ACCORDING TO EN10164.

REFERENCE DRAWINGS

1	93M-0407-SEN-6OL11-END-10118-B PAGE 01:17
2	
3	
4	
5	
6	
7	
8	
9	
10	
11	

6TH OF OCTOBER CITY RAIL TRANSIT MONORAIL &
NEW CAPITAL CITY RAIL TRANSIT MONORAIL

The Authority
Hill International
Authority Consultant

ORASCOM CONSTRUCTION
Main Contractor

BOMBARDIER
SENER
SHAKER CONSULTANCY GROUP
Designer

CONTRACTOR & CONSULTANT:
ENGINEERING HOUSE FOR CONSULTANCY

SCALE: AS SHOWN | CHK'D DRAWING | DATE: 20.11.2024

REV	DATE	BY	DESCRIPTION	CHK	APD
A	20-11-24	E.SH	ISSUE FOR APPROVAL	A.SH	M.M

6 October Monorail
Engineering Unit
Valid For Construction

DRAWING TITLE:
6TH OF OCTOBER MONORAIL
SHOP DRAWING FOR BRIDGE 6OL11-37
STEEL TRUSS (II).
FP56

Project Code	Rubric	Initiator	Lot	Ref	Number	Revision
93M	0407	AAC	60L11	DWG	90267	A

-Drawing shall be updated according to the comments on the GA drawing.
-Approval is subjected to the approval of coordination package between multi-discipline.

REVIEWED WITH COMMENT
MONORAILS PROJECT

All holes are 22mm U.N.O Length & Area & Weight per piece

Mark	Profile	Grade	QTY	Length	Area	Weight
FP57	FLT20*400	S355J2N	1	4031.8	3.33	243.0

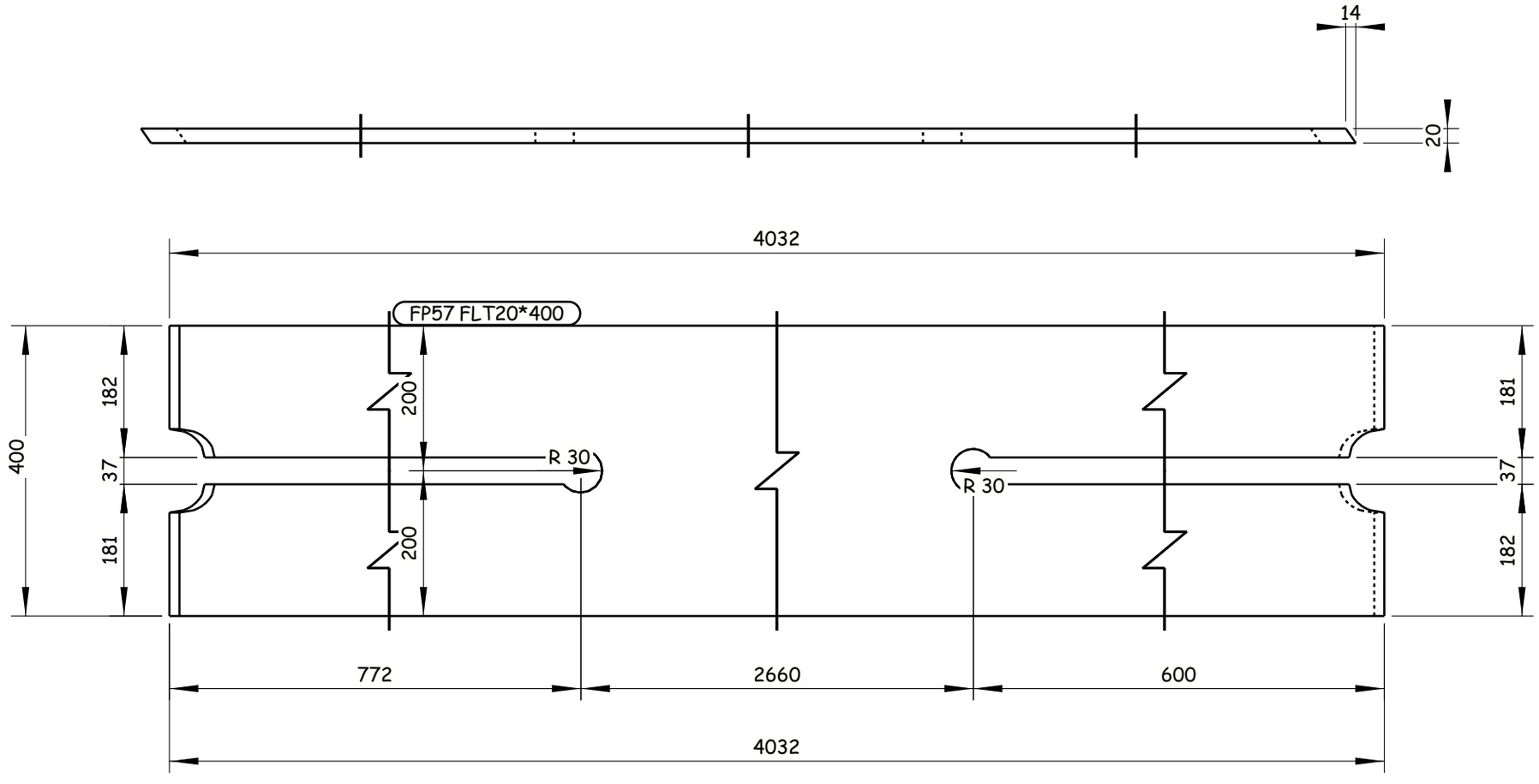

1 REQUIRED AS DRAWN E.SH FP57

6 October Monorail
Engineering Unit
Valid For Construction

Tekla structures

GENERAL NOTES:

1. ALL DIMENSIONS ARE IN MILLIMETERS UNLESS OTHERWISE SPECIFIED.
2. LEVELS ARE IN METERS
3. DESIGN SERVICE LIFE OF 100 YEARS.
4. FLANGES OF TOP AND BOTTOM CHORDS TO BE SUPPLIED WITH IMPROVED THROUGH THICKNESS PROPERTIES Z25 ACCORDING TO EN10164.

REFERENCE DRAWINGS

1	93M-0407-SEN-6OL11-END-10118-B PAGE 01:17
2	
3	
4	
5	
6	
7	
8	
9	
10	
11	

6TH OF OCTOBER CITY RAIL TRANSIT MONORAIL &
NEW CAPITAL CITY RAIL TRANSIT MONORAIL

The Authority
Hill International
Authority Consultant

Main Contractor

Designer

CONTRACTOR & CONSULTANT:
ENGINEERING HOUSE FOR CONSULTANCY

SCALE: AS SHOWN | CHK'D DRAWING | DATE: 20.11.2024

REV	DATE	BY	DESCRIPTION	CHK	APD
A	20-11-24	E.SH	ISSUE FOR APPROVAL	A.SH	M.M

DRAWING TITLE:
6TH OF OCTOBER MONORAIL
SHOP DRAWING FOR BRIDGE 6OL11-37
STEEL TRUSS (II).
FP57

Project Code	Rubric	Initiator	Lot	Ref	Number	Revision
93M	0407	AAC	60L11	DWG	90268	A

-Drawing shall be updated according to the comments on the GA drawing.
-Approval is subjected to the approval of coordination package between multi-discipline.

REVIEWED WITH COMMENT
MONORAILS PROJECT

All holes are 22mm U.N.O Length & Area & Weight per piece

Mark	Profile	Grade	QTY	Length	Area	Weight
FP58	FLT20*400	S355J2N	1	4031.7	3.33	243.1

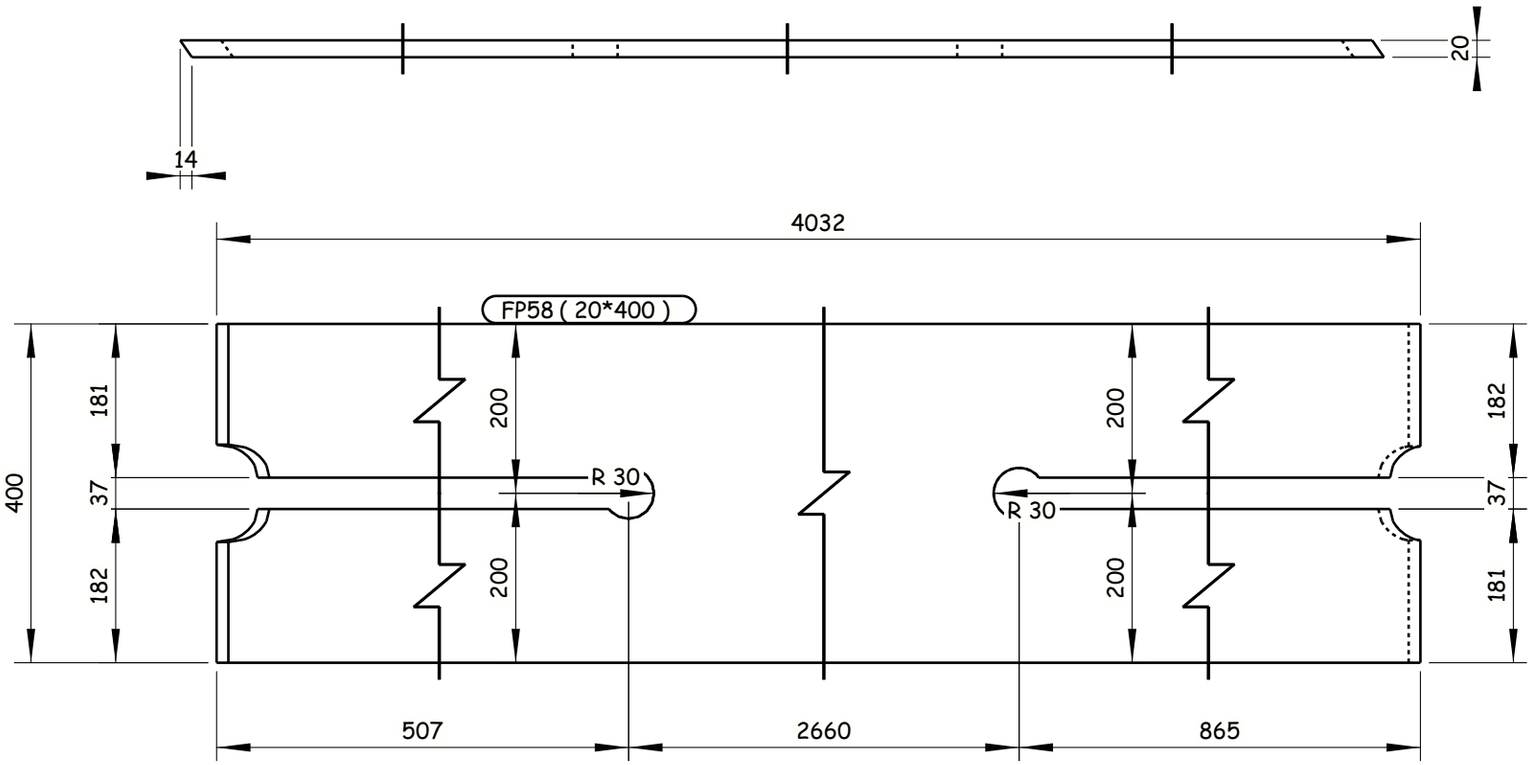

1 REQUIRED AS DRAWN E.SH FP58

Tekla structures

GENERAL NOTES:

1. ALL DIMENSIONS ARE IN MILLIMETERS UNLESS OTHERWISE SPECIFIED.
2. LEVELS ARE IN METERS
3. DESIGN SERVICE LIFE OF 100 YEARS.
4. FLANGES OF TOP AND BOTTOM CHORDS TO BE SUPPLIED WITH IMPROVED THROUGH THICKNESS PROPERTIES Z25 ACCORDING TO EN10164.

REFERENCE DRAWINGS

1	93M-0407-SEN-6OL11-END-10118-B PAGE 01:17
2	
3	
4	
5	
6	
7	
8	
9	
10	
11	

6TH OF OCTOBER CITY RAIL TRANSIT MONORAIL &
NEW CAPITAL CITY RAIL TRANSIT MONORAIL

The Authority — Hill International Authority Consultant — ORASCOM CONSTRUCTION — BOMBARDIER — Main Contractor — SENER — SHAKER CONSULTANCY GROUP — Designer

CONTRACTOR & CONSULTANT: ENGINEERING HOUSE FOR CONSULTANCY

SCALE: AS SHOWN | CHK'D DRAWING | DATE: 20.11.2024

REV	DATE	BY	DESCRIPTION	CHK	APD
A	20-11-24	E.SH	ISSUE FOR APPROVAL	A.SH	M.M

6 October Monorail
Engineering Unit
Valid For Construction

DRAWING TITLE:
6TH OF OCTOBER MONORAIL
SHOP DRAWING FOR BRIDGE 6OL11-37
STEEL TRUSS (II).
FP58

Project Code	Rubric	Initiator	Lot	Ref	Number	Revision
93M	0407	AAC	60L11	DWG	90269	A

-Drawing shall be updated according to the comments on the GA drawing.
-Approval is subjected to the approval of coordination package between multi-discipline.

REVIEWED WITH COMMENT
MONORAILS PROJECT

All holes are 22mm U.N.O Length & Area & Weight per piece

Mark	Profile	Grade	QTY	Length	Area	Weight
FP59	FLT25*600	S355J2N	1	18321.3	22.73	2095.8

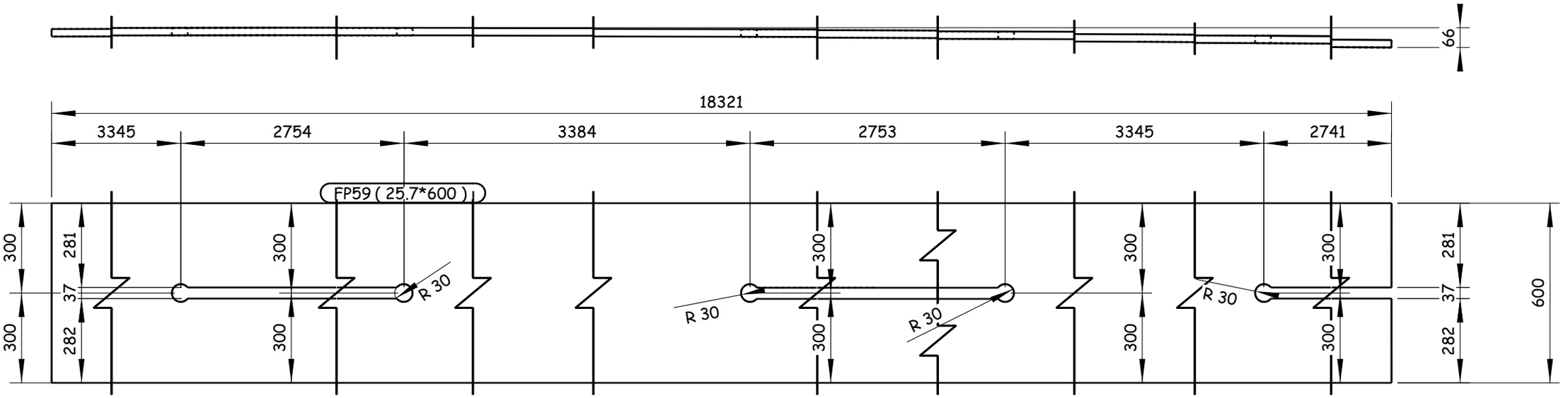

1 REQUIRED AS DRAWN E.SH FP59

6 October Monorail
Engineering Unit
Valid For Cönstruction

GENERAL NOTES:

1. ALL DIMENSIONS ARE IN MILLIMETERS UNLESS OTHERWISE SPECIFIED.
2. LEVELS ARE IN METERS
3. DESIGN SERVICE LIFE OF 100 YEARS.
4. FLANGES OF TOP AND BOTTOM CHORDS TO BE SUPPLIED WITH IMPROVED THROUGH THICKNESS PROPERTIES Z25 ACCORDING TO EN10164.

REFERENCE DRAWINGS

1	93M-0407-SEN-6OL11-END-10118-B PAGE 01:17
2	
3	
4	
5	
6	
7	
8	
9	
10	
11	

6TH OF OCTOBER CITY RAIL TRANSIT MONORAIL &
NEW CAPITAL CITY RAIL TRANSIT MONORAIL

The Authority — Hill International — Authority Consultant
ORASCOM CONSTRUCTION — Main Contractor
BOMBARDIER
SENER — SHAKER CONSULTANCY GROUP — Designer

CONTRACTOR & CONSULTANT:
EHC — ENGINEERING HOUSE FOR CONSULTANCY

REV	DATE	BY	DESCRIPTION	CHK	APD
A	20-11-24	E.SH	ISSUE FOR APPROVAL	A.SH	M.M

SCALE: AS SHOWN | SHOP DRAWING | DATE: 20.11.2024

DRAWING TITLE:
6TH OF OCTOBER MONORAIL
SHOP DRAWING FOR BRIDGE 6OL11-37
STEEL TRUSS (II).
FP59

Project Code	Rubric	Initiator	Lot	Ref	Number	Revision
93M	0407	AAC	60L11	DWG	90270	A

Tekla structures

-Drawing shall be updated according to the comments on the GA drawing.
-Approval is subjected to the approval of coordination package between multi-discipline.

REVIEWED WITH COMMENT
MONORAILS PROJECT

All holes are 22mm U.N.O Length & Area & Weight per piece

Mark	Profile	Grade	QTY	Length	Area	Weight
FP60	FLT40*600	S355J2N	1	1467.4	1.93	267.9

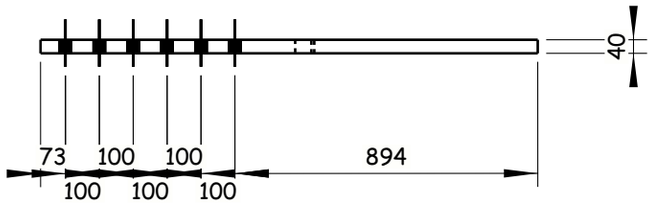

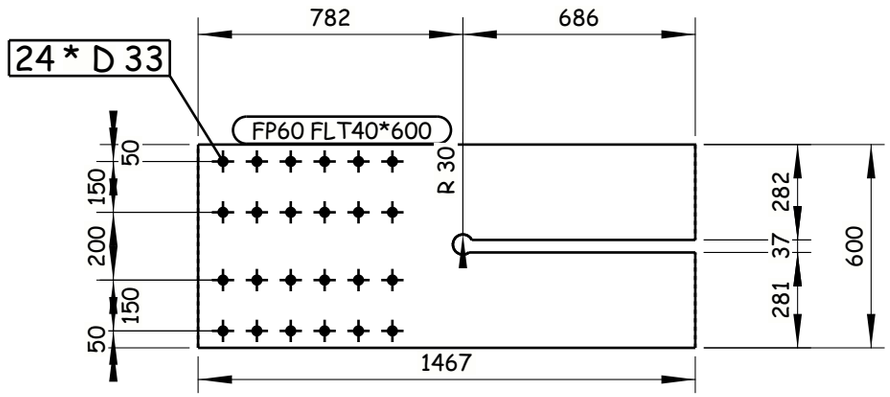

1 REQUIRED AS DRAWN E.SH FP60

6 October Monorail
Engineering Unit
Valid For Construction

Tekla structures

GENERAL NOTES:

1. ALL DIMENSIONS ARE IN MILLIMETERS UNLESS OTHERWISE SPECIFIED.
2. LEVELS ARE IN METERS
3. DESIGN SERVICE LIFE OF 100 YEARS.
4. FLANGES OF TOP AND BOTTOM CHORDS TO BE SUPPLIED WITH IMPROVED THROUGH THICKNESS PROPERTIES Z25 ACCORDING TO EN10164.

REFERENCE DRAWINGS

1	93M-0407-SEN-6OL11-END-10118-B PAGE 01:17
2	
3	
4	
5	
6	
7	
8	
9	
10	
11	

6TH OF OCTOBER CITY RAIL TRANSIT MONORAIL &
NEW CAPITAL CITY RAIL TRANSIT MONORAIL

The Authority
Hill International
Authority Consultant

ORASCOM CONSTRUCTION
Main Contractor

BOMBARDIER
SENER
SHAKER CONSULTANCY GROUP
Designer

CONTRACTOR & CONSULTANT:
ENGINEERING HOUSE FOR CONSULTANCY

SCALE: AS SHOWN | SHD DRAWING | DATE: 20.11.2024

REV	DATE	BY	DESCRIPTION	CHK	APD
A	20-11-24	E.SH	ISSUE FOR APPROVAL	A.SH	M.M

DRAWING TITLE:
6TH OF OCTOBER MONORAIL
SHOP DRAWING FOR BRIDGE 6OL11-37
STEEL TRUSS (II).
FP60

Project Code	Rubric	Initiator	Lot	Ref	Number	Revision
93M	0407	AAC	60L11	DWG	90271	A

-Drawing shall be updated according to the comments on the GA drawing.
-Approval is subjected to the approval of coordination package between multi-discipline.

REVIEWED WITH COMMENT
MONORAILS PROJECT

All holes are 22mm U.N.O Length & Area & Weight per piece

Mark	Profile	Grade	QTY	Length	Area	Weight
FP61	FLT35*400	S355J2N	2	4009.4	3.48	416.5

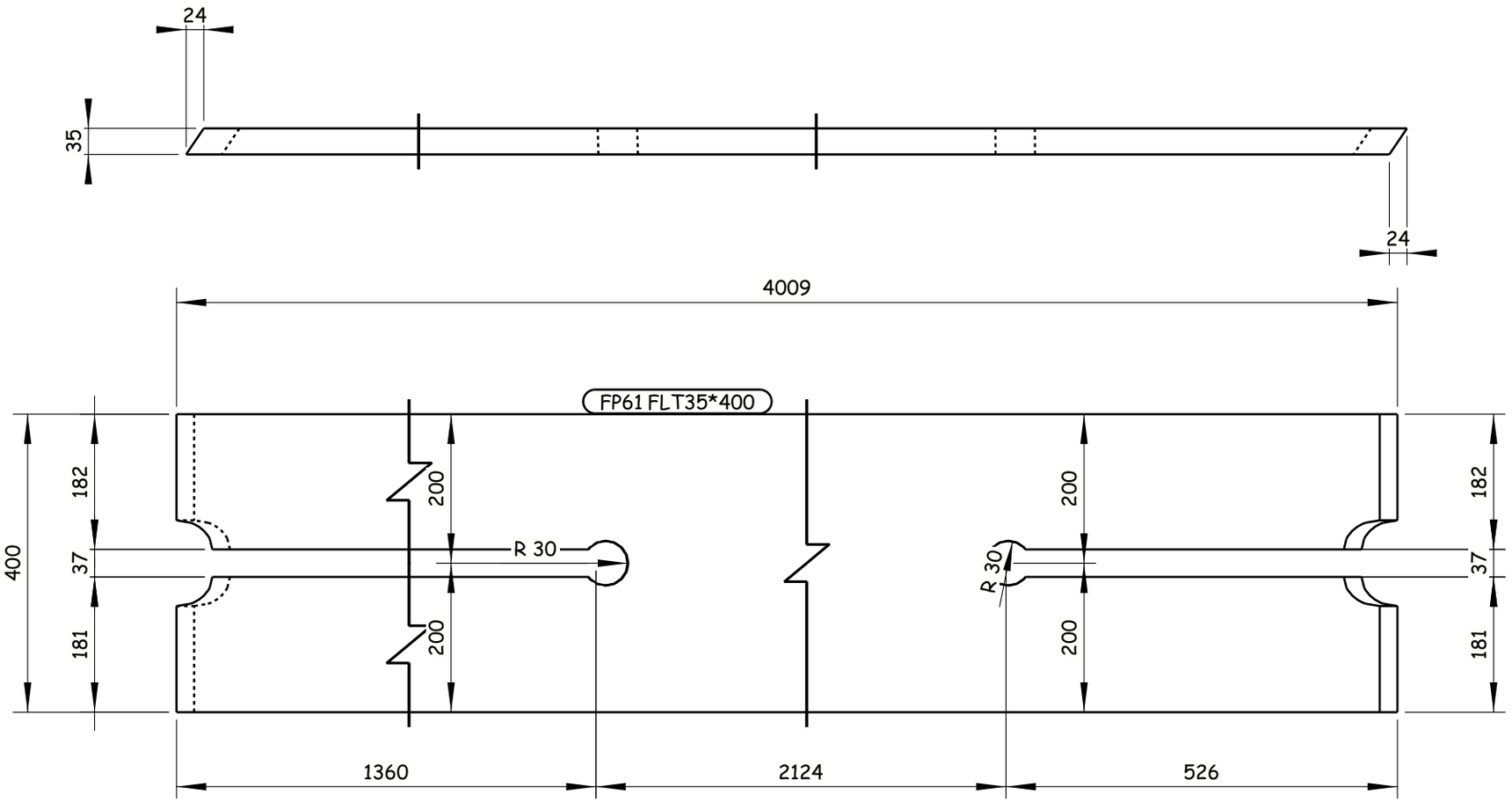

2 REQUIRED AS DRAWN E.SH FP61

6 October Monorail
Engineering Unit
Valid For Construction

GENERAL NOTES:

1. ALL DIMENSIONS ARE IN MILLIMETERS UNLESS OTHERWISE SPECIFIED.
2. LEVELS ARE IN METERS
3. DESIGN SERVICE LIFE OF 100 YEARS.
4. FLANGES OF TOP AND BOTTOM CHORDS TO BE SUPPLIED WITH IMPROVED THROUGH THICKNESS PROPERTIES Z25 ACCORDING TO EN10164.

REFERENCE DRAWINGS

1	93M-0407-SEN-6OL11-END-10118-B PAGE 01:17
2	
3	
4	
5	
6	
7	
8	
9	
10	
11	

6TH OF OCTOBER CITY RAIL TRANSIT MONORAIL &
NEW CAPITAL CITY RAIL TRANSIT MONORAIL

The Authority
Hill International
Authority Consultant

ORASCOM CONSTRUCTION
Main Contractor

BOMBARDIER
SENER
SHAKER CONSULTANCY GROUP
Designer

CONTRACTOR :
CONSULTANT :
ENGINEERING HOUSE FOR CONSULTANCY

REV	DATE	BY	DESCRIPTION	CHK	APD
A	20-11-24	E.SH	ISSUE FOR APPROVAL	A.SH	M.M

SCALE: AS SHOWN | CHD DRAWING | DATE: 20.11.2024

DRAWING TITLE:
6TH OF OCTOBER MONORAIL
SHOP DRAWING FOR BRIDGE 6OL11-37
STEEL TRUSS (II).
FP61

Project Code	Rubric	Initiator	Lot	Ref	Number	Revision
93M	0407	AAC	60L11	DWG	90272	A

Tekla structures

-Drawing shall be updated according to the comments on the GA drawing.
-Approval is subjected to the approval of coordination package between multi-discipline.

REVIEWED WITH COMMENT
MONORAILS PROJECT

All holes are 22mm U.N.O Length & Area & Weight per piece

Mark	Profile	Grade	QTY	Length	Area	Weight
FP62	FLT35*400	S355J2N	2	4062.5	3.52	427.5

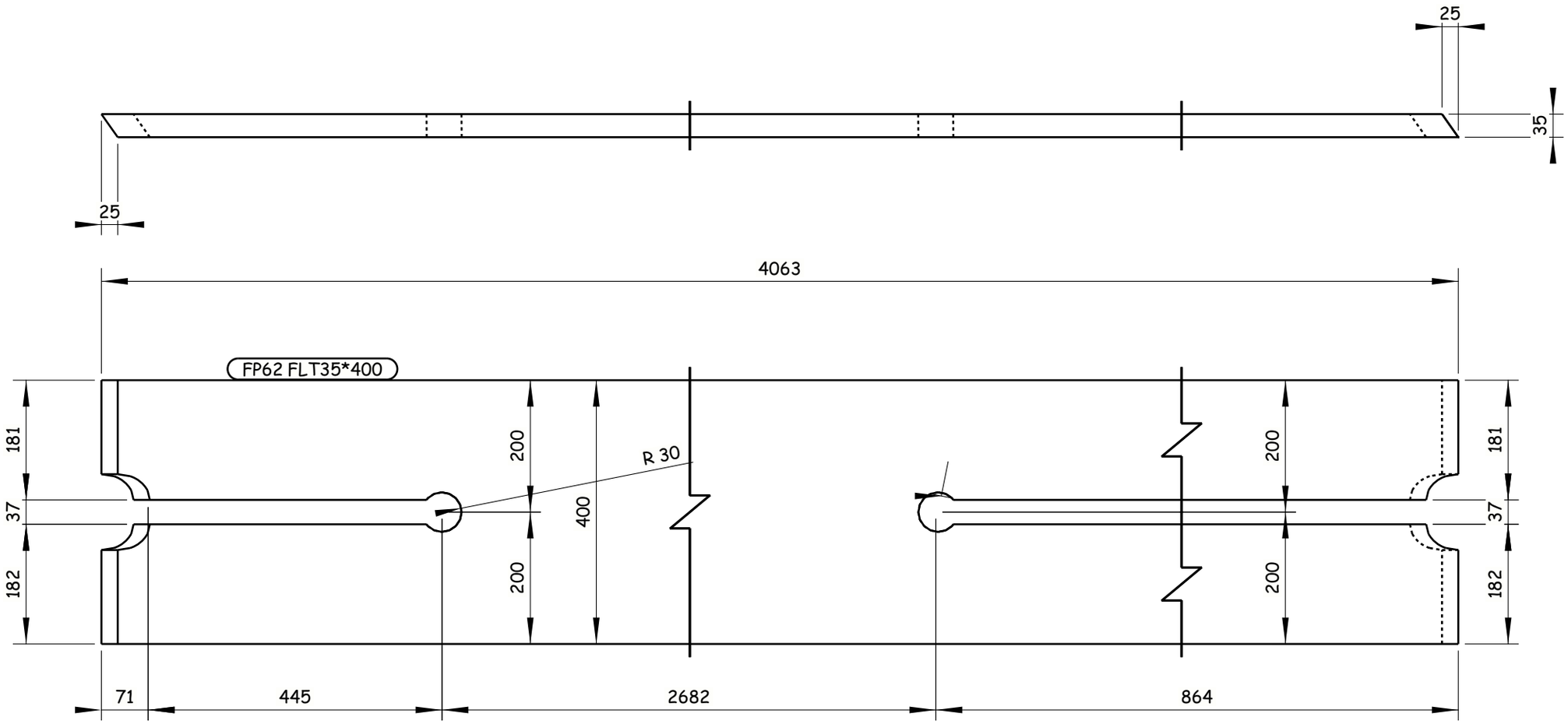

2 REQUIRED AS DRAWN E.SH FP62

GENERAL NOTES:

1. ALL DIMENSIONS ARE IN MILLIMETERS UNLESS OTHERWISE SPECIFIED.
2. LEVELS ARE IN METERS
3. DESIGN SERVICE LIFE OF 100 YEARS.
4. FLANGES OF TOP AND BOTTOM CHORDS TO BE SUPPLIED WITH IMPROVED THROUGH THICKNESS PROPERTIES Z25 ACCORDING TO EN10164.

REFERENCE DRAWINGS

1	93M-0407-SEN-6OL11-END-10118-B PAGE 01:17
2	
3	
4	
5	
6	
7	
8	
9	
10	
11	

6TH OF OCTOBER CITY RAIL TRANSIT MONORAIL &
NEW CAPITAL CITY RAIL TRANSIT MONORAIL

The Authority — Hill International — Authority Consultant
ORASCOM CONSTRUCTION — Main Contractor
BOMBARDIER — SENER — SHAKER CONSULTANCY GROUP — Designer

CONTRACTOR & CONSULTANT:
ENGINEERING HOUSE FOR CONSULTANCY

6 October Monorail
Engineering Unit
Valid For Cönstruction

REV	DATE	BY	DESCRIPTION	CHK	APD
A	20-11-24	E.SH	ISSUE FOR APPROVAL	A.SH	M.M

SCALE: AS SHOWN | SHOP DRAWING | DATE: 20.11.2024

DRAWING TITLE:
6TH OF OCTOBER MONORAIL
SHOP DRAWING FOR BRIDGE 6OL11-37
STEEL TRUSS (II).
FP62

Project Code	Rubric	Initiator	Lot	Ref	Number	Revision
93M	0407	AAC	60L11	DWG	90273	A

Tekla structures

-Drawing shall be updated according to the comments on the GA drawing.
-Approval is subjected to the approval of coordination package between multi-discipline.

REVIEWED WITH COMMENT
MONORAILS PROJECT

All holes are 22mm U.N.O Length & Area & Weight per piece

Mark	Profile	Grade	QTY	Length	Area	Weight
FP63	FLT20*400	S355J2N	1	4018.8	3.32	242.1

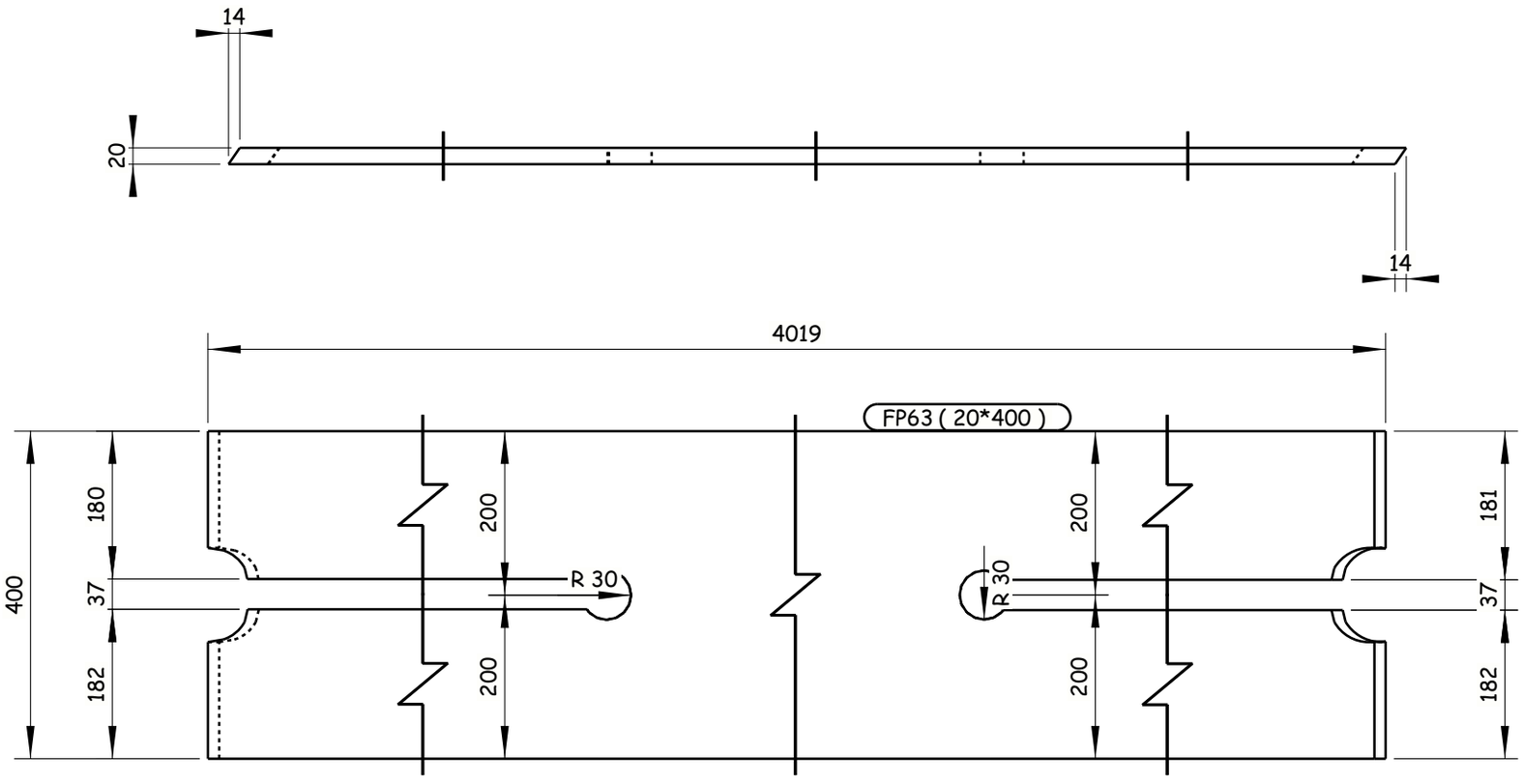

1 REQUIRED AS DRAWN E.SH FP63

Tekla structures

GENERAL NOTES:

1. ALL DIMENSIONS ARE IN MILLIMETERS UNLESS OTHERWISE SPECIFIED.
2. LEVELS ARE IN METERS
3. DESIGN SERVICE LIFE OF 100 YEARS.
4. FLANGES OF TOP AND BOTTOM CHORDS TO BE SUPPLIED WITH IMPROVED THROUGH THICKNESS PROPERTIES Z25 ACCORDING TO EN10164.

REFERENCE DRAWINGS

1	93M-0407-SEN-6OL11-END-10118-B PAGE 01:17
2	
3	
4	
5	
6	
7	
8	
9	
10	
11	

6TH OF OCTOBER CITY RAIL TRANSIT MONORAIL &
NEW CAPITAL CITY RAIL TRANSIT MONORAIL

The Authority
Hill International
Authority Consultant

Main Contractor

Designer

CONTRACTOR / CONSULTANT :

ENGINEERING HOUSE FOR CONSULTANCY

6 October Monorail
Engineering Unit
Valid For Construction

SCALE: AS SHOWN | SHOP DRAWING | DATE: 20.11.2024

REV	DATE	BY	DESCRIPTION	CHK	APD
A	20-11-24	E.SH	ISSUE FOR APPROVAL	A.SH	M.M

DRAWING TITLE:
6TH OF OCTOBER MONORAIL
SHOP DRAWING FOR BRIDGE 6OL11-37
STEEL TRUSS (II).
FP63

Project Code	Rubric	Initiator	Lot	Ref	Number	Revision
9 3 M 0 4 0 7	A A C	6 0 L 1 1	D W G		90274	A

-Drawing shall be updated according to the comments on the GA drawing.
-Approval is subjected to the approval of coordination package between multi-discipline.

REVIEWED WITH COMMENT
MONORAILS PROJECT

All holes are 22mm U.N.O Length & Area & Weight per piece

Mark	Profile	Grade	QTY	Length	Area	Weight
FP64	FLT20*400	S355J2N	3	4025.3	3.32	242.6

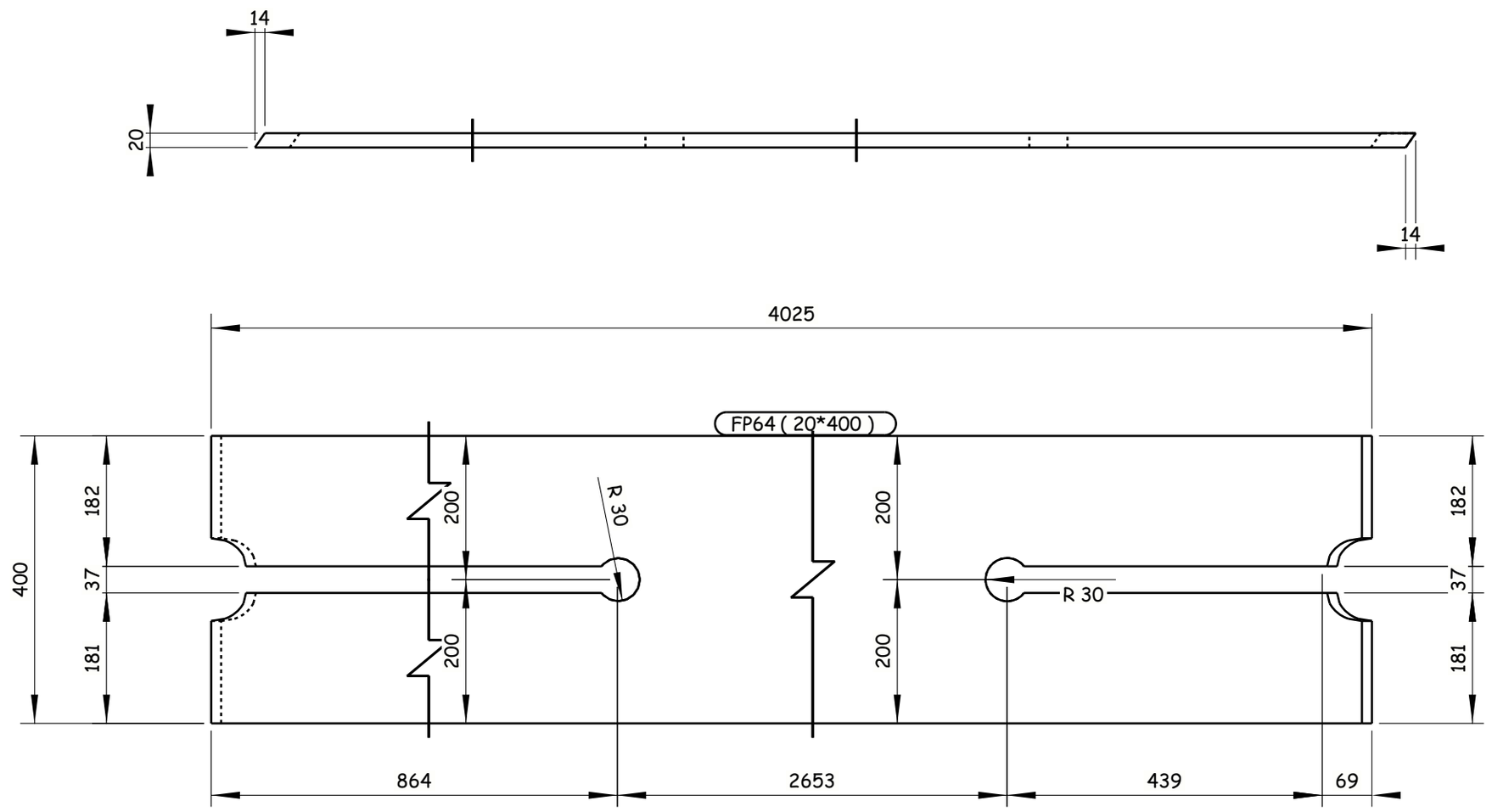

3 REQUIRED AS DRAWN E.SH FP64

GENERAL NOTES:

1. ALL DIMENSIONS ARE IN MILLIMETERS UNLESS OTHERWISE SPECIFIED.
2. LEVELS ARE IN METERS
3. DESIGN SERVICE LIFE OF 100 YEARS.
4. FLANGES OF TOP AND BOTTOM CHORDS TO BE SUPPLIED WITH IMPROVED THROUGH THICKNESS PROPERTIES Z25 ACCORDING TO EN10164.

REFERENCE DRAWINGS

1	93M-0407-SEN-6OL11-END-10118-B PAGE 01:17
2	
3	
4	
5	
6	
7	
8	
9	
10	
11	

6TH OF OCTOBER CITY RAIL TRANSIT MONORAIL &
NEW CAPITAL CITY RAIL TRANSIT MONORAIL

The Authority
Hill International
Authority Consultant

Main Contractor

Designer

CONTRACTOR / CONSULTANT:
ENGINEERING HOUSE FOR CONSULTANCY

SCALE: AS SHOWN | CHD DRAWING | DATE: 20.11.2024

REV	DATE	BY	DESCRIPTION	CHK	APD
A	20-11-24	E.SH	ISSUE FOR APPROVAL	A.SH	M.M

6 October Monorail
Engineering Unit
Valid For Construction

DRAWING TITLE:
6TH OF OCTOBER MONORAIL
SHOP DRAWING FOR BRIDGE 6OL11-37
STEEL TRUSS (II).
FP64

Project Code	Rubric	Initiator	Lot	Ref	Number	Revision
9 3 M 0	4 0 7	A A C	6 0 L 1 1	D W G	90275	A

Tekla structures

-Drawing shall be updated according to the comments on the GA drawing.
-Approval is subjected to the approval of coordination package between multi-discipline.

REVIEWED WITH COMMENT
MONORAILS PROJECT

All holes are 22mm U.N.O Length & Area & Weight per piece

Mark	Profile	Grade	QTY	Length	Area	Weight
FP65	FLT20*400	S355J2N	1	4020.5	3.32	242.3

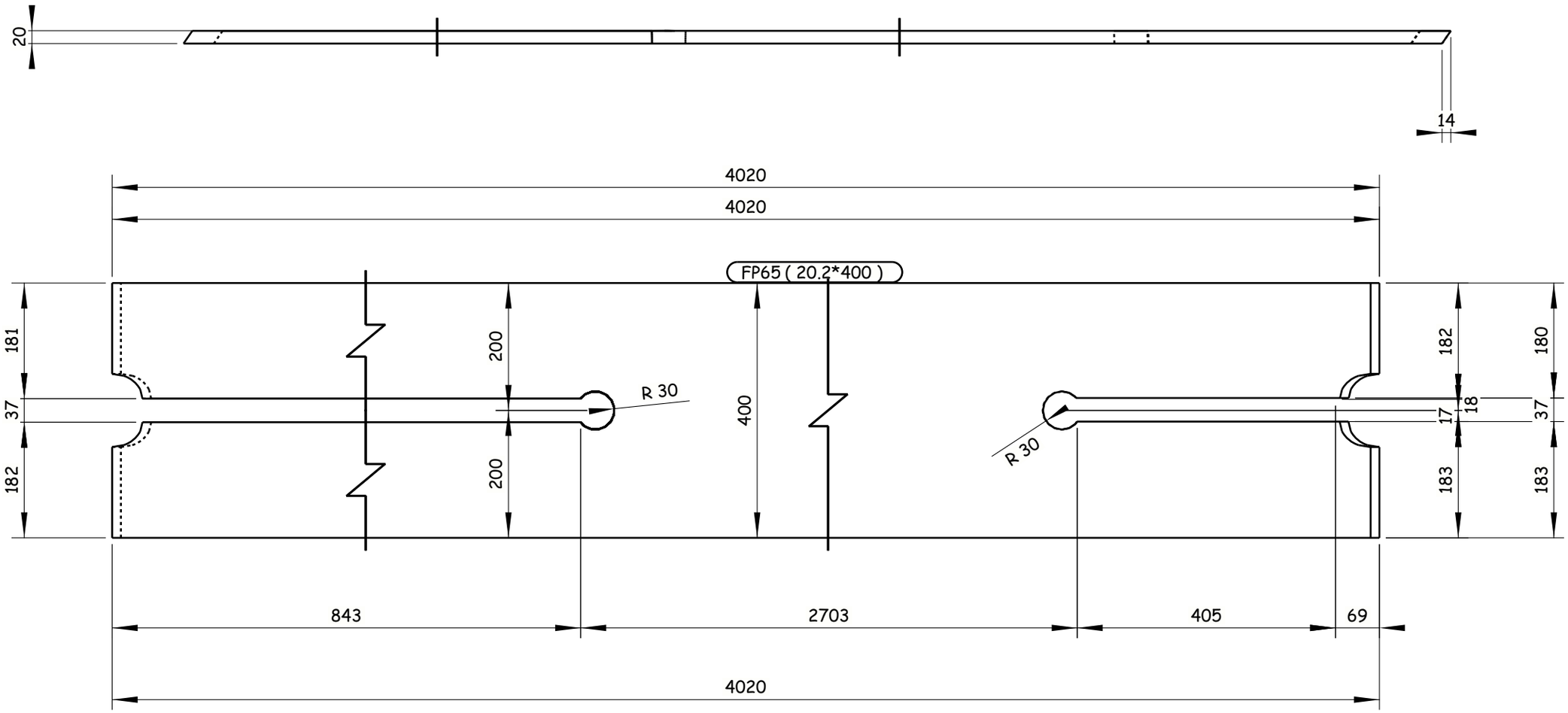

1 REQUIRED AS DRAWN E.SH FP65

GENERAL NOTES:
1. ALL DIMENSIONS ARE IN MILLIMETERS UNLESS OTHERWISE SPECIFIED.
2. LEVELS ARE IN METERS
3. DESIGN SERVICE LIFE OF 100 YEARS.
4. FLANGES OF TOP AND BOTTOM CHORDS TO BE SUPPLIED WITH IMPROVED THROUGH THICKNESS PROPERTIES Z25 ACCORDING TO EN10164.

REFERENCE DRAWINGS

1	93M-0407-SEN-6OL11-END-10118-B PAGE 01:17
2	
3	
4	
5	
6	
7	
8	
9	
10	
11	

6TH OF OCTOBER CITY RAIL TRANSIT MONORAIL &
NEW CAPITAL CITY RAIL TRANSIT MONORAIL

The Authority
Hill International
Authority Consultant

Main Contractor

Designer

CONTRACTOR & CONSULTANT:
ENGINEERING HOUSE FOR CONSULTANCY

SCALE: AS SHOWN | CHK'D DRAWING | DATE: 20.11.2024

REV	DATE	BY	DESCRIPTION	CHK	APD
A	20-11-24	E.SH	ISSUE FOR APPROVAL	A.SH	M.M

6 October Monorail
Engineering Unit
Valid For Construction

DRAWING TITLE:
6TH OF OCTOBER MONORAIL
SHOP DRAWING FOR BRIDGE 6OL11-37
STEEL TRUSS (II).
FP65

Project Code	Rubric	Initiator	Lot	Ref	Number	Revision
9 3 M	0 4 0 7	A A C	6 0 L 1 1	D W G	90276	A

Tekla structures

-Drawing shall be updated according to the comments on the GA drawing.
-Approval is subjected to the approval of coordination package between multi-discipline.

REVIEWED WITH COMMENT
MONORAILS PROJECT

All holes are 22mm U.N.O Length & Area & Weight per piece

Mark	Profile	Grade	QTY	Length	Area	Weight
FP66	FLT25*600	S355J2N	1	18321.3	22.73	2095.7

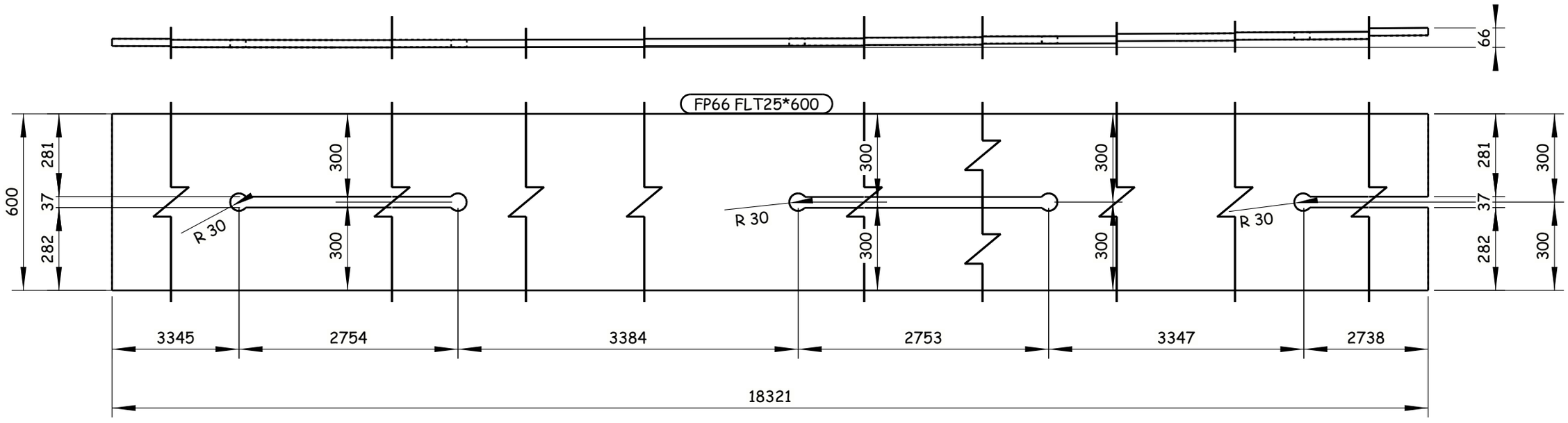

1 REQUIRED AS DRAWN E.SH FP66

GENERAL NOTES:

1. ALL DIMENSIONS ARE IN MILLIMETERS UNLESS OTHERWISE SPECIFIED.
2. LEVELS ARE IN METERS
3. DESIGN SERVICE LIFE OF 100 YEARS.
4. FLANGES OF TOP AND BOTTOM CHORDS TO BE SUPPLIED WITH IMPROVED THROUGH THICKNESS PROPERTIES Z25 ACCORDING TO EN10164.

REFERENCE DRAWINGS

1	93M-0407-SEN-6OL11-END-10118-B PAGE 01:17
2	
3	
4	
5	
6	
7	
8	
9	
10	
11	

6TH OF OCTOBER CITY RAIL TRANSIT MONORAIL &
NEW CAPITAL CITY RAIL TRANSIT MONORAIL

The Authority — Hill International Authority Consultant

Main Contractor

Designer

CONTRACTOR / CONSULTANT:

ENGINEERING HOUSE FOR CONSULTANCY

REV	DATE	BY	DESCRIPTION	CHK	APD
A	20-11-24	E.SH	ISSUE FOR APPROVAL	A.SH	M.M

SCALE: AS SHOWN | CHD DRAWING | DATE: 20.11.2024

6 October Monorail
Engineering Unit
Valid For Construction

DRAWING TITLE:
6TH OF OCTOBER MONORAIL
SHOP DRAWING FOR BRIDGE 6OL11-37
STEEL TRUSS (II).
FP66

Project Code	Rubric	Initiator	Lot	Ref	Number	Revision
93M	0407	AAC	60L11	DWG	90277	A

Tekla structures

-Drawing shall be updated according to the comments on the GA drawing.
-Approval is subjected to the approval of coordination package between multi-discipline.

REVIEWED WITH COMMENT
MONORAILS PROJECT

All holes are 22mm U.N.O Length & Area & Weight per piece

Mark	Profile	Grade	QTY	Length	Area	Weight
FP67	FLT40*600	S355J2N	1	1467.4	1.93	267.9

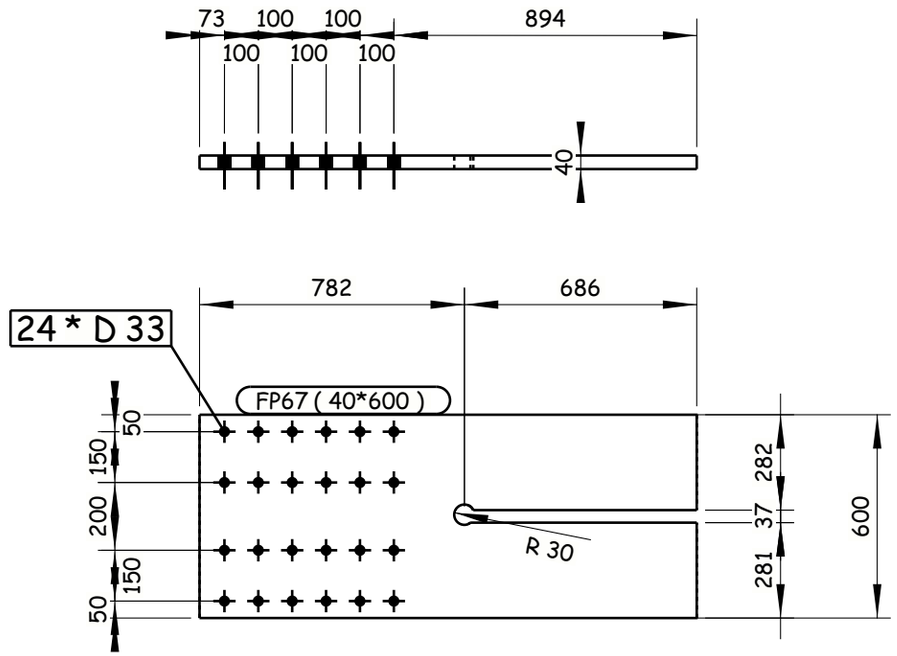

1 REQUIRED AS DRAWN E.SH FP67

GENERAL NOTES:

1. ALL DIMENSIONS ARE IN MILLIMETERS UNLESS OTHERWISE SPECIFIED.
2. LEVELS ARE IN METERS
3. DESIGN SERVICE LIFE OF 100 YEARS.
4. FLANGES OF TOP AND BOTTOM CHORDS TO BE SUPPLIED WITH IMPROVED THROUGH THICKNESS PROPERTIES Z25 ACCORDING TO EN10164.

REFERENCE DRAWINGS

1	93M-0407-SEN-6OL11-END-10118-B PAGE 01:17
2	
3	
4	
5	
6	
7	
8	
9	
10	
11	

6TH OF OCTOBER CITY RAIL TRANSIT MONORAIL &
NEW CAPITAL CITY RAIL TRANSIT MONORAIL

The Authority
Hill International
Authority Consultant

Main Contractor

Designer

CONTRACTOR CONSULTANT :

ENGINEERING HOUSE FOR CONSULTANCY

6 October Monorail
Engineering Unit
Valid For Construction

SCALE AS SHOWN | SHOP DRAWING | DATE 20.11.2024

DRAWING TITLE:
6TH OF OCTOBER MONORAIL
SHOP DRAWING FOR BRIDGE 6OL11-37
STEEL TRUSS (II).
FP67

REV	DATE	BY	DESCRIPTION	CHK	APD
A	20-11-24	E.SH	ISSUE FOR APPROVAL	A.SH	M.M

Project Code	Rubric	Initiator	Lot	Ref	Number	Revision
93M	0407	AAC	60L11	DWG	90278	A

Tekla structures

-Drawing shall be updated according to the comments on the GA drawing.
-Approval is subjected to the approval of coordination package between multi-discipline.

REVIEWED WITH COMMENT
MONORAILS PROJECT

All holes are 22mm U.N.O Length & Area & Weight per piece

Mark	Profile	Grade	QTY	Length	Area	Weight
FP68	FLT40*600	S355J2N	1	23419.6	30.08	4308.0

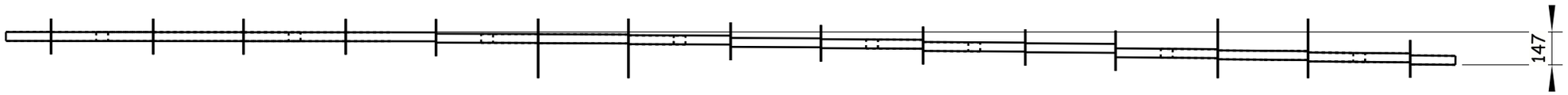

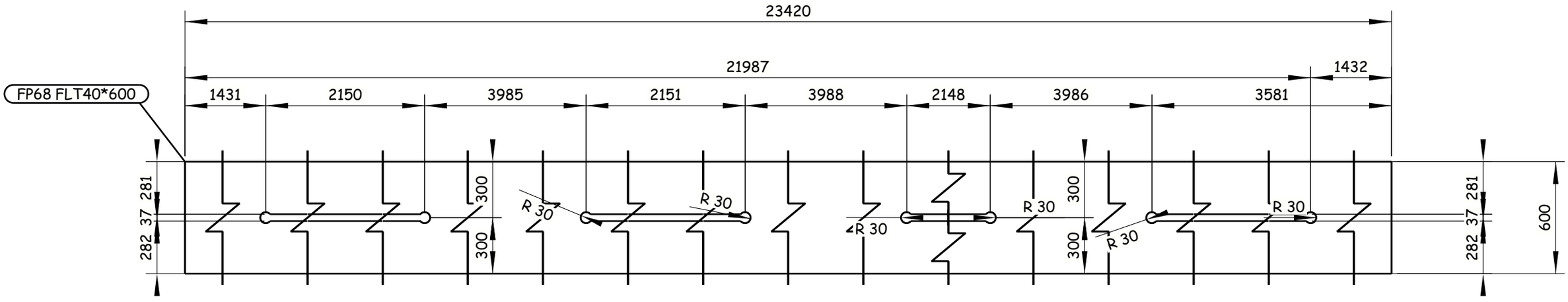

1 REQUIRED AS DRAWN E.SH FP68

6 October Monorail
Engineering Unit
Valid For Construction

GENERAL NOTES:
1. ALL DIMENSIONS ARE IN MILLIMETERS UNLESS OTHERWISE SPECIFIED.
2. LEVELS ARE IN METERS
3. DESIGN SERVICE LIFE OF 100 YEARS.
4. FLANGES OF TOP AND BOTTOM CHORDS TO BE SUPPLIED WITH IMPROVED THROUGH THICKNESS PROPERTIES Z25 ACCORDING TO EN10164.

REFERENCE DRAWINGS

1	93M-0407-SEN-6OL11-END-10118-B PAGE 01:17
2	
3	
4	
5	
6	
7	
8	
9	
10	
11	

6TH OF OCTOBER CITY RAIL TRANSIT MONORAIL &
NEW CAPITAL CITY RAIL TRANSIT MONORAIL

The Authority
Hill International
Authority Consultant

Main Contractor

Designer

CONTRACTOR
CONSULTANT :
ENGINEERING HOUSE FOR CONSULTANCY

SCALE: AS SHOWN | CHK'D DRWG | DATE: 20.11.2024

REV	DATE	BY	DESCRIPTION	CHK	APD
A	20-11-24	E.SH	ISSUE FOR APPROVAL	A.SH	M.M

DRAWING TITLE:
6TH OF OCTOBER MONORAIL
SHOP DRAWING FOR BRIDGE 6OL11-37
STEEL TRUSS (II).
FP68

Project Code	Rubric	Initiator	Lot	Ref	Number	Revision
93M	0407	AAC	60L11	DWG	90279	A

Tekla structures

-Drawing shall be updated according to the comments on the GA drawing.
-Approval is subjected to the approval of coordination package between multi-discipline.

REVIEWED WITH COMMENT
MONORAILS PROJECT

All holes are 22mm U.N.O Length & Area & Weight per piece

Mark	Profile	Grade	QTY	Length	Area	Weight
FP69	FLT40*600	S355J2N	1	20912.6	26.88	3824.4

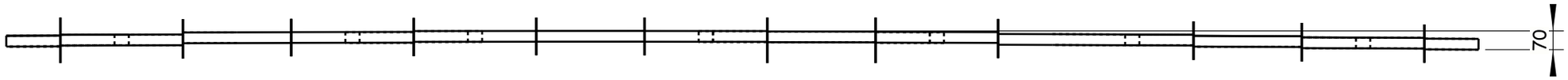

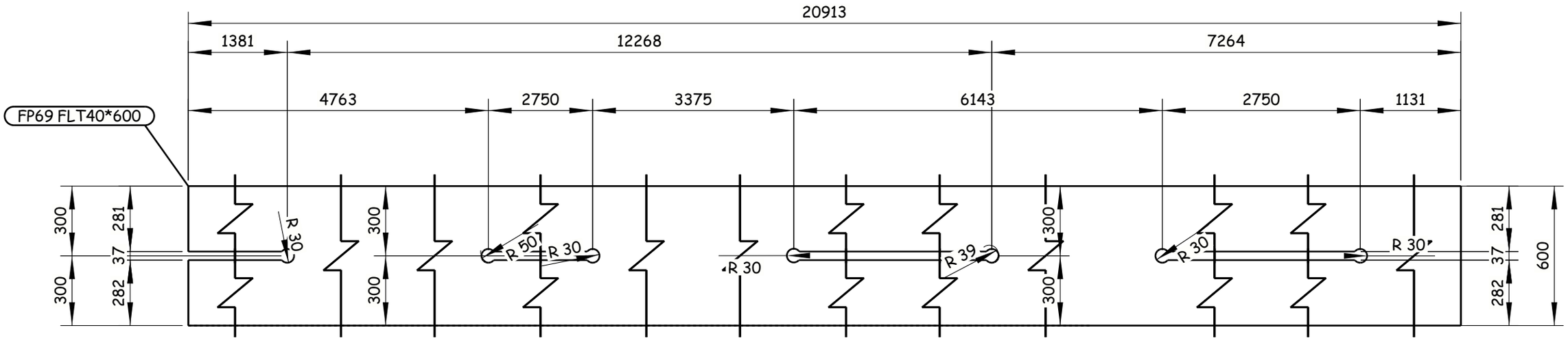

1 REQUIRED AS DRAWN E.SH FP69

6 October Monorail
Engineering Unit
Valid For Construction

GENERAL NOTES:

1. ALL DIMENSIONS ARE IN MILLIMETERS UNLESS OTHERWISE SPECIFIED.
2. LEVELS ARE IN METERS
3. DESIGN SERVICE LIFE OF 100 YEARS.
4. FLANGES OF TOP AND BOTTOM CHORDS TO BE SUPPLIED WITH IMPROVED THROUGH THICKNESS PROPERTIES Z25 ACCORDING TO EN10164.

REFERENCE DRAWINGS

1	93M-0407-SEN-6OL11-END-10118-B PAGE 01:17
2	
3	
4	
5	
6	
7	
8	
9	
10	
11	

6TH OF OCTOBER CITY RAIL TRANSIT MONORAIL &
NEW CAPITAL CITY RAIL TRANSIT MONORAIL

The Authority — Hill International — Authority Consultant
Main Contractor
Designer

CONTRACTOR & CONSULTANT:
ENGINEERING HOUSE FOR CONSULTANCY

REV	DATE	BY	DESCRIPTION	CHK	APD
A	20-11-24	E.SH	ISSUE FOR APPROVAL	A.SH	M.M

SCALE: AS SHOWN | SHOP DRAWING | DATE: 20.11.2024

DRAWING TITLE:
6TH OF OCTOBER MONORAIL
SHOP DRAWING FOR BRIDGE 6OL11-37
STEEL TRUSS (II).
FP69

Project Code	Rubric	Initiator	Lot	Ref	Number	Revision
93M	0407	AAC	60L11	DWG	90280	A

Tekla structures

-Drawing shall be updated according to the comments on the GA drawing.
-Approval is subjected to the approval of coordination package between multi-discipline.

REVIEWED WITH COMMENT
MONORAILS PROJECT

All holes are 22mm U.N.O Length & Area & Weight per piece

Mark	Profile	Grade	QTY	Length	Area	Weight
FP70	PL45*720	S355K2N	1	16103.7	24.81	4014.1

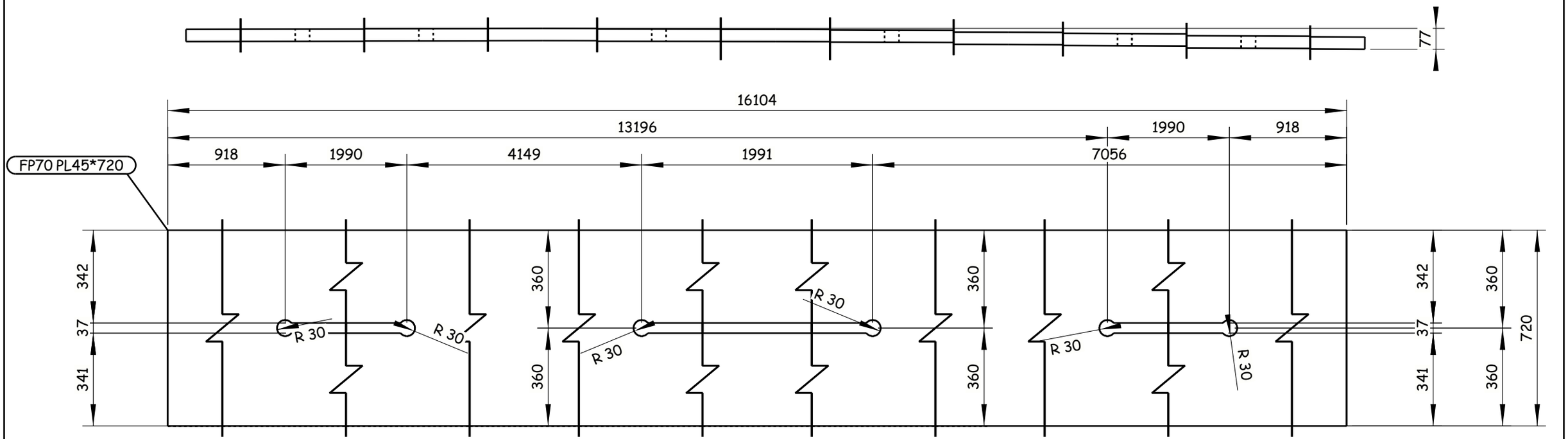

1 REQUIRED AS DRAWN E.SH FP70

GENERAL NOTES:

1. ALL DIMENSIONS ARE IN MILLIMETERS UNLESS OTHERWISE SPECIFIED.
2. LEVELS ARE IN METERS
3. DESIGN SERVICE LIFE OF 100 YEARS.
4. FLANGES OF TOP AND BOTTOM CHORDS TO BE SUPPLIED WITH IMPROVED THROUGH THICKNESS PROPERTIES Z25 ACCORDING TO EN10164.

REFERENCE DRAWINGS

1	93M-0407-SEN-6OL11-END-10118-B PAGE 01:17
2	
3	
4	
5	
6	
7	
8	
9	
10	
11	

6TH OF OCTOBER CITY RAIL TRANSIT MONORAIL &
NEW CAPITAL CITY RAIL TRANSIT MONORAIL

The Authority
Hill International
Authority Consultant

ORASCOM CONSTRUCTION
BOMBARDIER
Main Contractor

SENER
SHAKER CONSULTANCY GROUP
Designer

CONTRACTOR / CONSULTANT:
ENGINEERING HOUSE FOR CONSULTANCY

6 October Monorail
Engineering Unit
Valid For Construction

SCALE	CHD DRAWING	DATE
AS SHOWN		20.11.2024

REV	DATE	BY	DESCRIPTION	CHK	APD
A	20-11-24	E.SH	ISSUE FOR APPROVAL	A.SH	M.M

DRAWING TITLE:
6TH OF OCTOBER MONORAIL
SHOP DRAWING FOR BRIDGE 6OL11-37
STEEL TRUSS (II).
FP70

Project Code	Rubric	Initiator	Lot	Ref	Number	Revision
9 3 M	0 4 0 7	A A C	6 0 L 1 1	D W G	90281	A

Tekla structures

-Drawing shall be updated according to the comments on the GA drawing.
-Approval is subjected to the approval of coordination package between multi-discipline.

REVIEWED WITH COMMENT
MONORAILS PROJECT

All holes are 22mm U.N.O Length & Area & Weight per piece

Mark	Profile	Grade	QTY	Length	Area	Weight
FP71	PL45*720	S355K2N	2	16099.3	24.70	4094.7

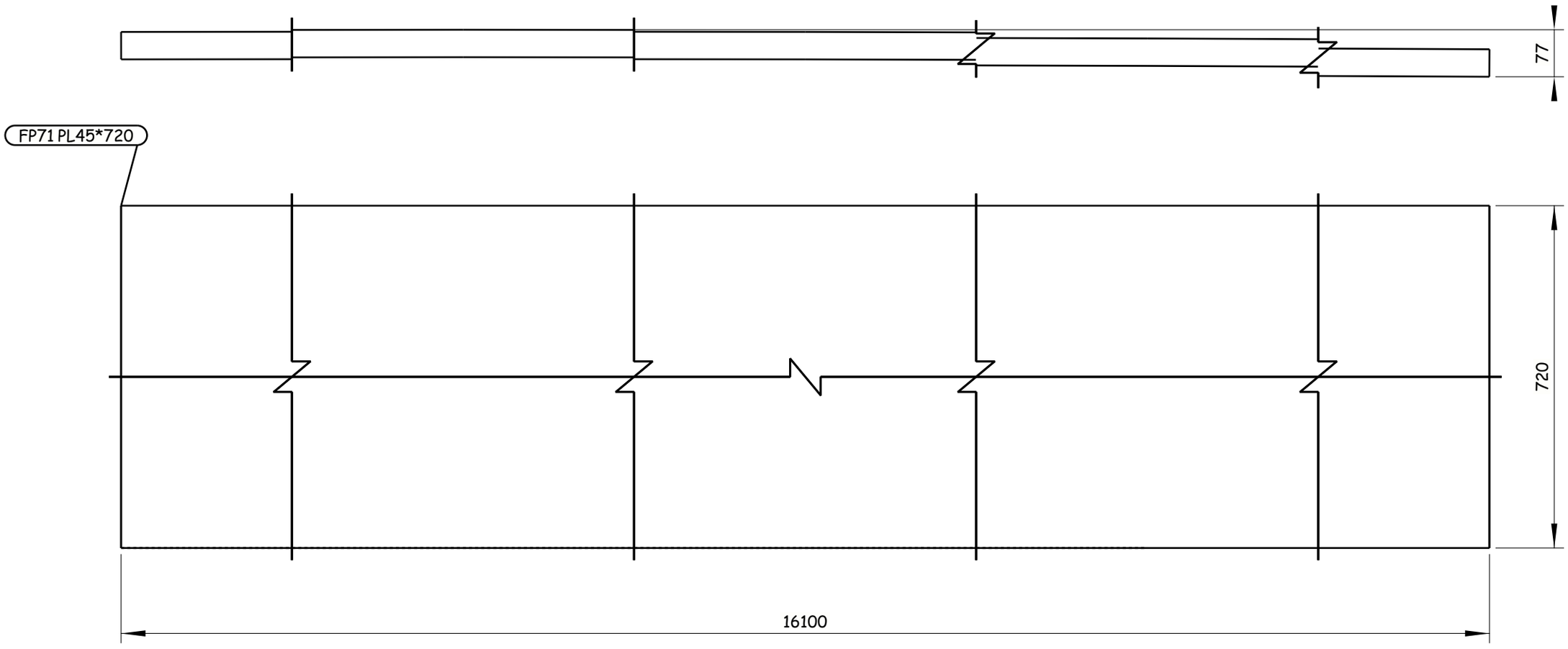

2 REQUIRED AS DRAWN E.SH FP71

GENERAL NOTES:

1. ALL DIMENSIONS ARE IN MILLIMETERS UNLESS OTHERWISE SPECIFIED.
2. LEVELS ARE IN METERS
3. DESIGN SERVICE LIFE OF 100 YEARS.
4. FLANGES OF TOP AND BOTTOM CHORDS TO BE SUPPLIED WITH IMPROVED THROUGH THICKNESS PROPERTIES Z25 ACCORDING TO EN10164.

REFERENCE DRAWINGS

1	93M-0407-SEN-6OL11-END-10118-B PAGE 01:17
2	
3	
4	
5	
6	
7	
8	
9	
10	
11	

6TH OF OCTOBER CITY RAIL TRANSIT MONORAIL &
NEW CAPITAL CITY RAIL TRANSIT MONORAIL

The Authority
Hill International
Authority Consultant

Main Contractor

Designer

CONTRACTOR & CONSULTANT:
ENGINEERING HOUSE FOR CONSULTANCY

6 October Monorail
Engineering Unit
Valid For Construction

SCALE: AS SHOWN | CHK'D DRAWING | DATE: 20.11.2024

REV	DATE	BY	DESCRIPTION	CHK	APD
A	20-11-24	E.SH	ISSUE FOR APPROVAL	A.SH	M.M

DRAWING TITLE:
6TH OF OCTOBER MONORAIL
SHOP DRAWING FOR BRIDGE 6OL11-37
STEEL TRUSS (II).
FP71

Project Code	Rubric	Initiator	Lot	Ref	Number	Revision
93M	0407	AAC	60L11	DWG	90282	A

Tekla structures

-Drawing shall be updated according to the comments on the GA drawing.
-Approval is subjected to the approval of coordination package between multi-discipline.

REVIEWED WITH COMMENT
MONORAILS PROJECT

All holes are 22mm U.N.O Length & Area & Weight per piece

Mark	Profile	Grade	QTY	Length	Area	Weight
FP72	FLT20*400	S355J2N	1	4024.9	3.32	242.5

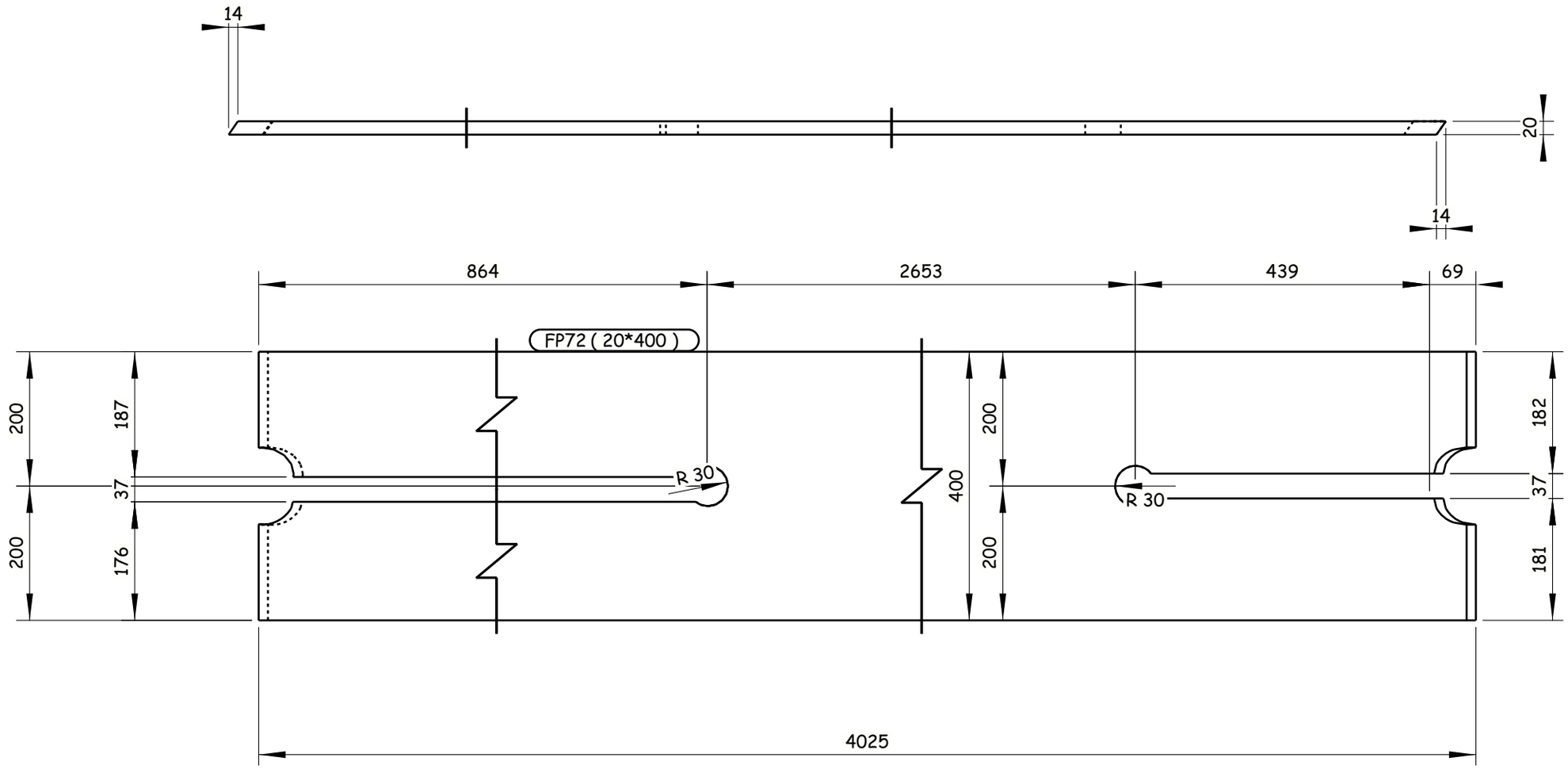

1 REQUIRED AS DRAWN E.SH FP72

6 October Monorail
Engineering Unit
Valid For Construction

GENERAL NOTES:
1. ALL DIMENSIONS ARE IN MILLIMETERS UNLESS OTHERWISE SPECIFIED.
2. LEVELS ARE IN METERS
3. DESIGN SERVICE LIFE OF 100 YEARS.
4. FLANGES OF TOP AND BOTTOM CHORDS TO BE SUPPLIED WITH IMPROVED THROUGH THICKNESS PROPERTIES Z25 ACCORDING TO EN10164.

REFERENCE DRAWINGS

1	93M-0407-SEN-6OL11-END-10118-B PAGE 01:17
2	
3	
4	
5	
6	
7	
8	
9	
10	
11	

6TH OF OCTOBER CITY RAIL TRANSIT MONORAIL &
NEW CAPITAL CITY RAIL TRANSIT MONORAIL

The Authority
Hill International
Authority Consultant

Main Contractor

Designer

CONTRACTOR & CONSULTANT:
ENGINEERING HOUSE FOR CONSULTANCY

SCALE: AS SHOWN | CHK'D DRAWING | DATE: 20.11.2024

REV	DATE	BY	DESCRIPTION	CHK	APD
A	20-11-24	E.SH	ISSUE FOR APPROVAL	A.SH	M.M

DRAWING TITLE:
6TH OF OCTOBER MONORAIL
SHOP DRAWING FOR BRIDGE 6OL11-37
STEEL TRUSS (II).
FP72

Project Code	Rubric	Initiator	Lot	Ref	Number	Revision
93M	047	AAC	60L11	DWG	90283	A

Tekla structures

-Drawing shall be updated according to the comments on the GA drawing.
-Approval is subjected to the approval of coordination package between multi-discipline.

REVIEWED WITH COMMENT
MONORAILS PROJECT

All holes are 22mm U.N.O Length & Area & Weight per piece

Mark	Profile	Grade	QTY	Length	Area	Weight
FP73	FLT20*400	S355J2N	1	4031.8	3.33	243.0

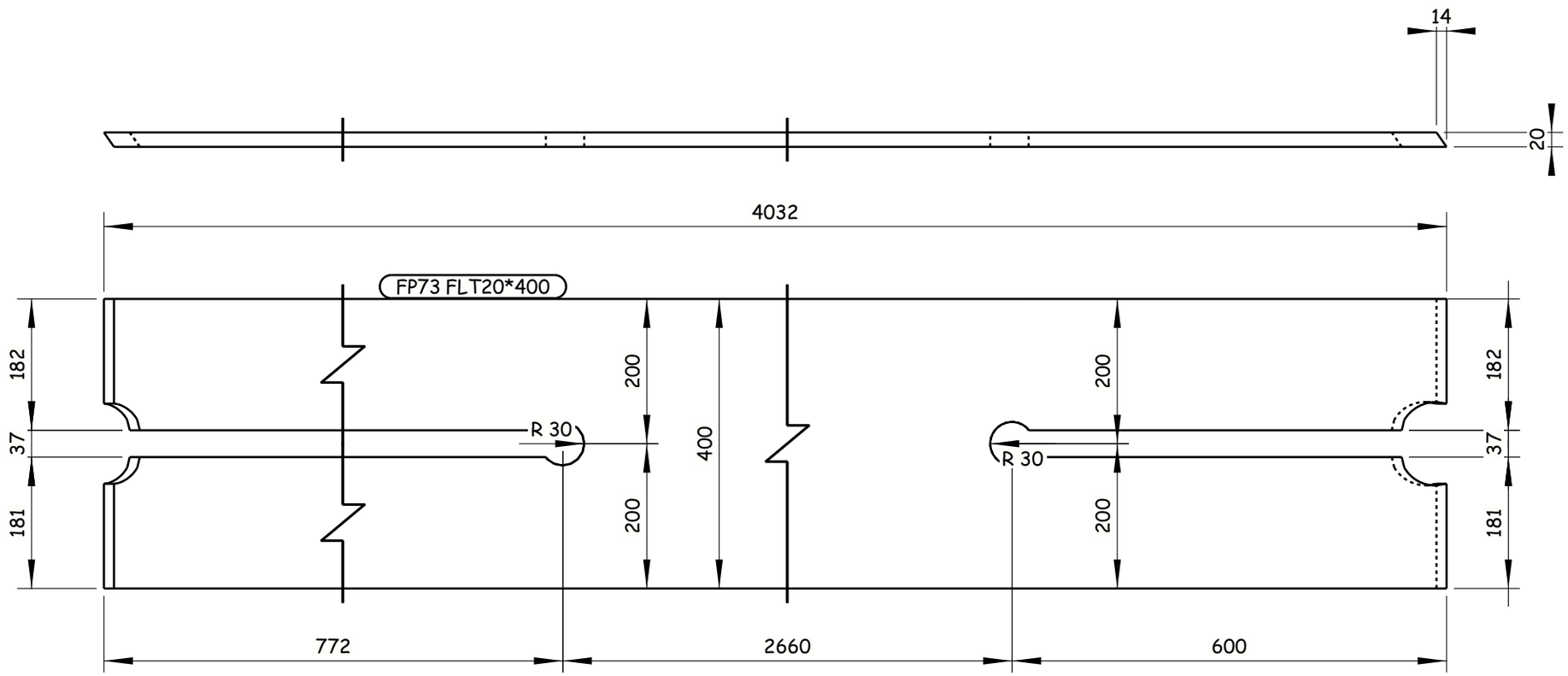

1 REQUIRED AS DRAWN E.SH FP73

6 October Monorail
Engineering Unit
Valid For Construction

GENERAL NOTES:
1. ALL DIMENSIONS ARE IN MILLIMETERS UNLESS OTHERWISE SPECIFIED.
2. LEVELS ARE IN METERS
3. DESIGN SERVICE LIFE OF 100 YEARS.
4. FLANGES OF TOP AND BOTTOM CHORDS TO BE SUPPLIED WITH IMPROVED THROUGH THICKNESS PROPERTIES Z25 ACCORDING TO EN10164.

REFERENCE DRAWINGS

1	93M-0407-SEN-6OL11-END-10118-B PAGE 01:17
2	
3	
4	
5	
6	
7	
8	
9	
10	
11	

6TH OF OCTOBER CITY RAIL TRANSIT MONORAIL &
NEW CAPITAL CITY RAIL TRANSIT MONORAIL

The Authority
Hill International
Authority Consultant

Main Contractor

Designer

CONTRACTOR CONSULTANT:
ENGINEERING HOUSE FOR CONSULTANCY

SCALE: AS SHOWN | CHD DRAWING | DATE: 20.11.2024

REV	DATE	BY	DESCRIPTION	CHK	APD
A	20-11-24	E.SH	ISSUE FOR APPROVAL	A.SH	M.M

DRAWING TITLE:
6TH OF OCTOBER MONORAIL
SHOP DRAWING FOR BRIDGE 6OL11-37
STEEL TRUSS (II).
FP73

Project Code	Rubric	Initiator	Lot	Ref	Number	Revision
9 3 M 0 4 0 7	A A C	6 0 L 1 1	D W G		90284	A

Tekla structures

-Drawing shall be updated according to the comments on the GA drawing.
-Approval is subjected to the approval of coordination package between multi-discipline.

REVIEWED WITH COMMENT
MONORAILS PROJECT

All holes are 22mm U.N.O Length & Area & Weight per piece

Mark	Profile	Grade	QTY	Length	Area	Weight
FP74	FLT20*400	S355J2N	1	4031.5	3.40	242.8

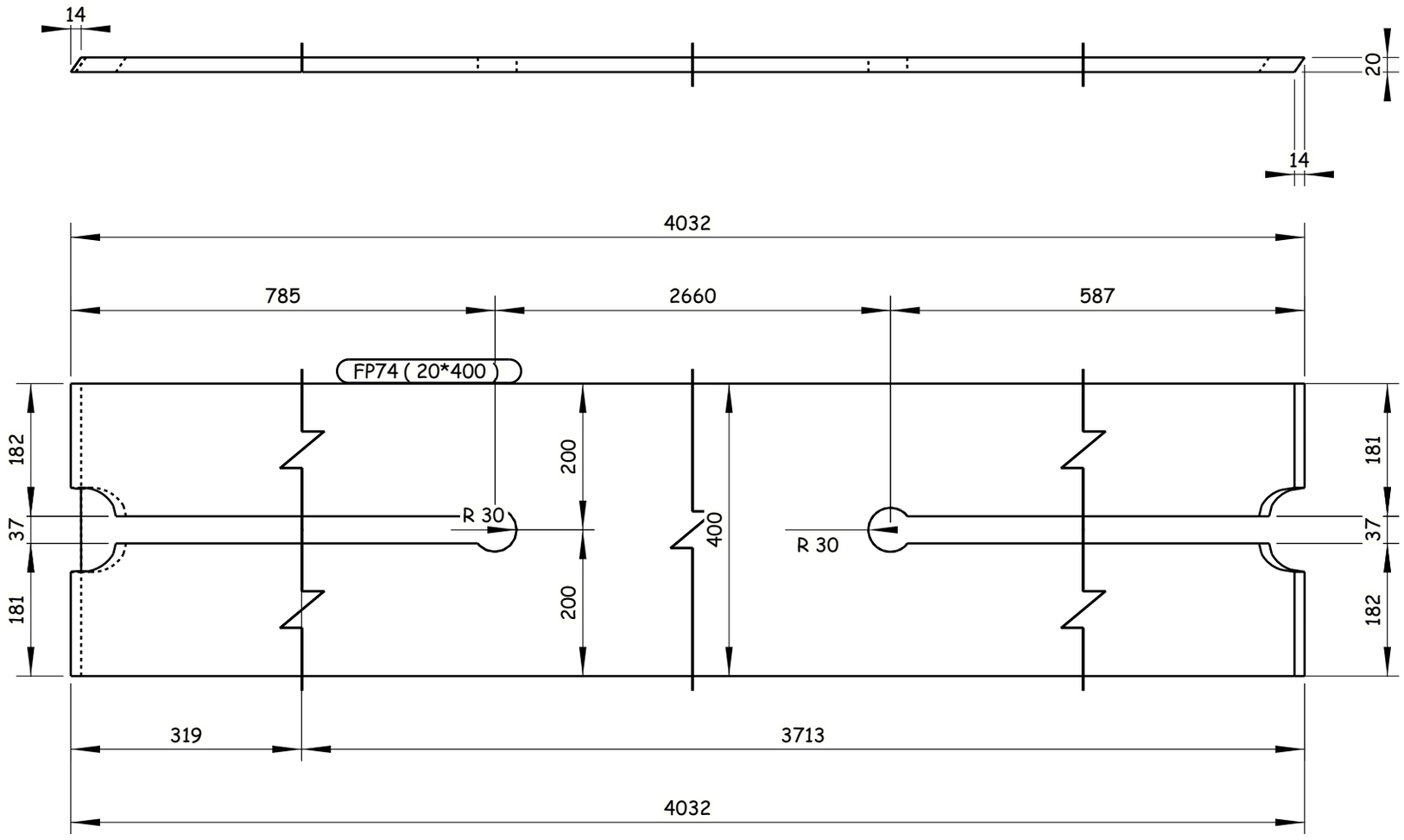

1 REQUIRED AS DRAWN E.SH FP74

GENERAL NOTES:

1. ALL DIMENSIONS ARE IN MILLIMETERS UNLESS OTHERWISE SPECIFIED.
2. LEVELS ARE IN METERS
3. DESIGN SERVICE LIFE OF 100 YEARS.
4. FLANGES OF TOP AND BOTTOM CHORDS TO BE SUPPLIED WITH IMPROVED THROUGH THICKNESS PROPERTIES Z25 ACCORDING TO EN10164.

REFERENCE DRAWINGS

1	93M-0407-SEN-6OL11-END-10118-B PAGE 01:17
2	
3	
4	
5	
6	
7	
8	
9	
10	
11	

6TH OF OCTOBER CITY RAIL TRANSIT MONORAIL &
NEW CAPITAL CITY RAIL TRANSIT MONORAIL

The Authority — Authority Consultant
Hill International
Main Contractor
Designer

CONTRACTOR & CONSULTANT:
ENGINEERING HOUSE FOR CONSULTANCY

SCALE: AS SHOWN | SHOP DRAWING | DATE: 20.11.2024

REV	DATE	BY	DESCRIPTION	CHK	APD
A	20-11-24	E.SH	ISSUE FOR APPROVAL	A.SH	M.M

6 October Monorail Engineering Unit
Valid For Construction

DRAWING TITLE:
6TH OF OCTOBER MONORAIL
SHOP DRAWING FOR BRIDGE 6OL11-37
STEEL TRUSS (II).
FP74

Project Code	Rubric	Initiator	Lot	Ref	Number	Revision
9 3 M	0 4 0 7	A A C	6 0 L 1 1	D W G	90285	A

Tekla structures

-Drawing shall be updated according to the comments on the GA drawing.
-Approval is subjected to the approval of coordination package between multi-discipline.

REVIEWED WITH COMMENT
MONORAILS PROJECT

All holes are 22mm U.N.O Length & Area & Weight per piece

Mark	Profile	Grade	QTY	Length	Area	Weight
FP75	FLT20*400	S355J2N	1	4030.6	3.33	242.8

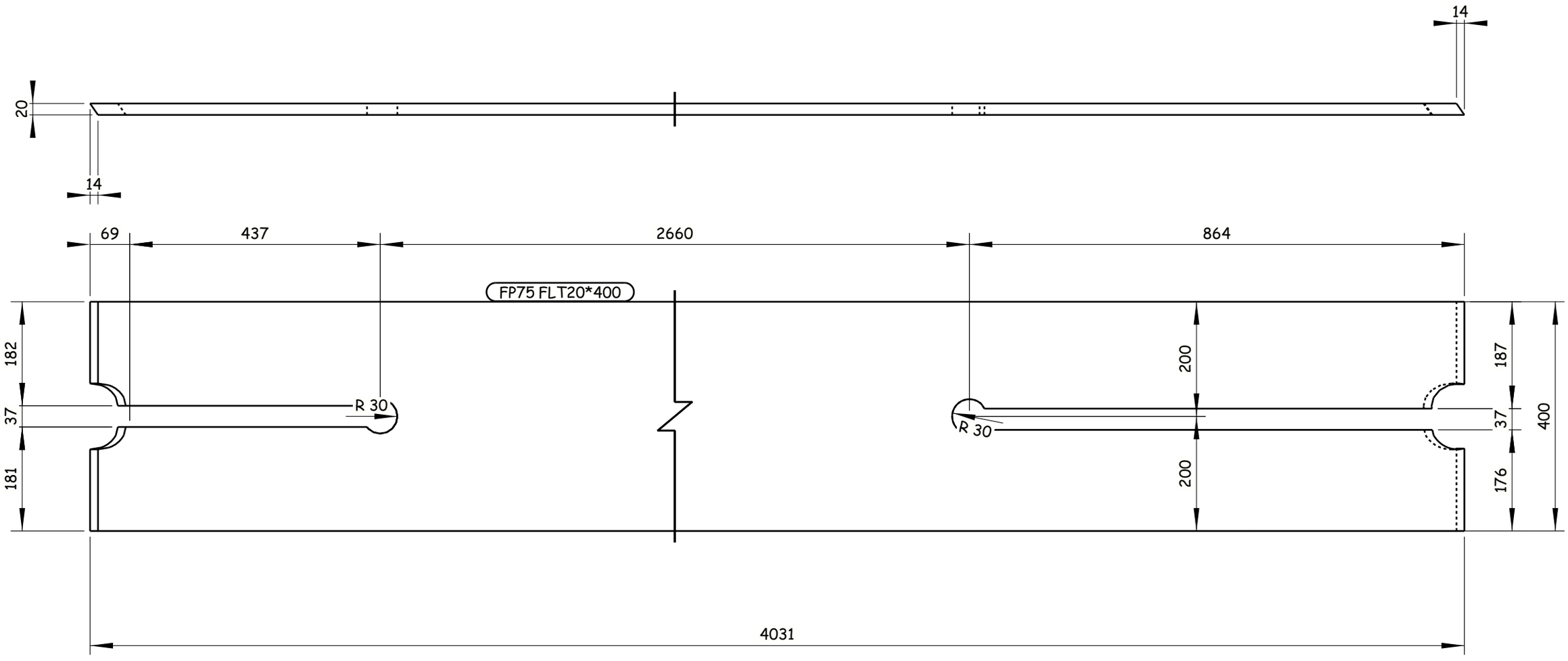

1 REQUIRED AS DRAWN E.SH FP75

GENERAL NOTES:

1. ALL DIMENSIONS ARE IN MILLIMETERS UNLESS OTHERWISE SPECIFIED.
2. LEVELS ARE IN METERS
3. DESIGN SERVICE LIFE OF 100 YEARS.
4. FLANGES OF TOP AND BOTTOM CHORDS TO BE SUPPLIED WITH IMPROVED THROUGH THICKNESS PROPERTIES Z25 ACCORDING TO EN10164.

REFERENCE DRAWINGS

1	93M-0407-SEN-6OL11-END-10118-B PAGE 01:17
2	
3	
4	
5	
6	
7	
8	
9	
10	
11	

6TH OF OCTOBER CITY RAIL TRANSIT MONORAIL &
NEW CAPITAL CITY RAIL TRANSIT MONORAIL

The Authority — Hill International Authority Consultant

Main Contractor: ORASCOM CONSTRUCTION, BOMBARDIER

Designer: SENER, SHAKER CONSULTANCY GROUP

CONTRACTOR / CONSULTANT : ENGINEERING HOUSE FOR CONSULTANCY

SCALE: AS SHOWN | CHD DRAWING | DATE: 20.11.2024

REV	DATE	BY	DESCRIPTION	CHK	APD
A	20-11-24	E.SH	ISSUE FOR APPROVAL	A.SH	M.M

6 October Monorail
Engineering Unit
Valid For Construction

DRAWING TITLE:
6TH OF OCTOBER MONORAIL
SHOP DRAWING FOR BRIDGE 6OL11-37
STEEL TRUSS (II).
FP75

Project Code	Rubric	Initiator	Lot	Ref	Number	Revision
9 3 M	0 4 0 7	A A C	6 0 L 1 1	D W G	90286	A

Tekla structures

-Drawing shall be updated according to the comments on the GA drawing.
-Approval is subjected to the approval of coordination package between multi-discipline.

REVIEWED WITH COMMENT
MONORAILS PROJECT

All holes are 22mm U.N.O Length & Area & Weight per piece

Mark	Profile	Grade	QTY	Length	Area	Weight
FP76	FLT20*400	S355J2N	1	4030.6	3.33	243.1

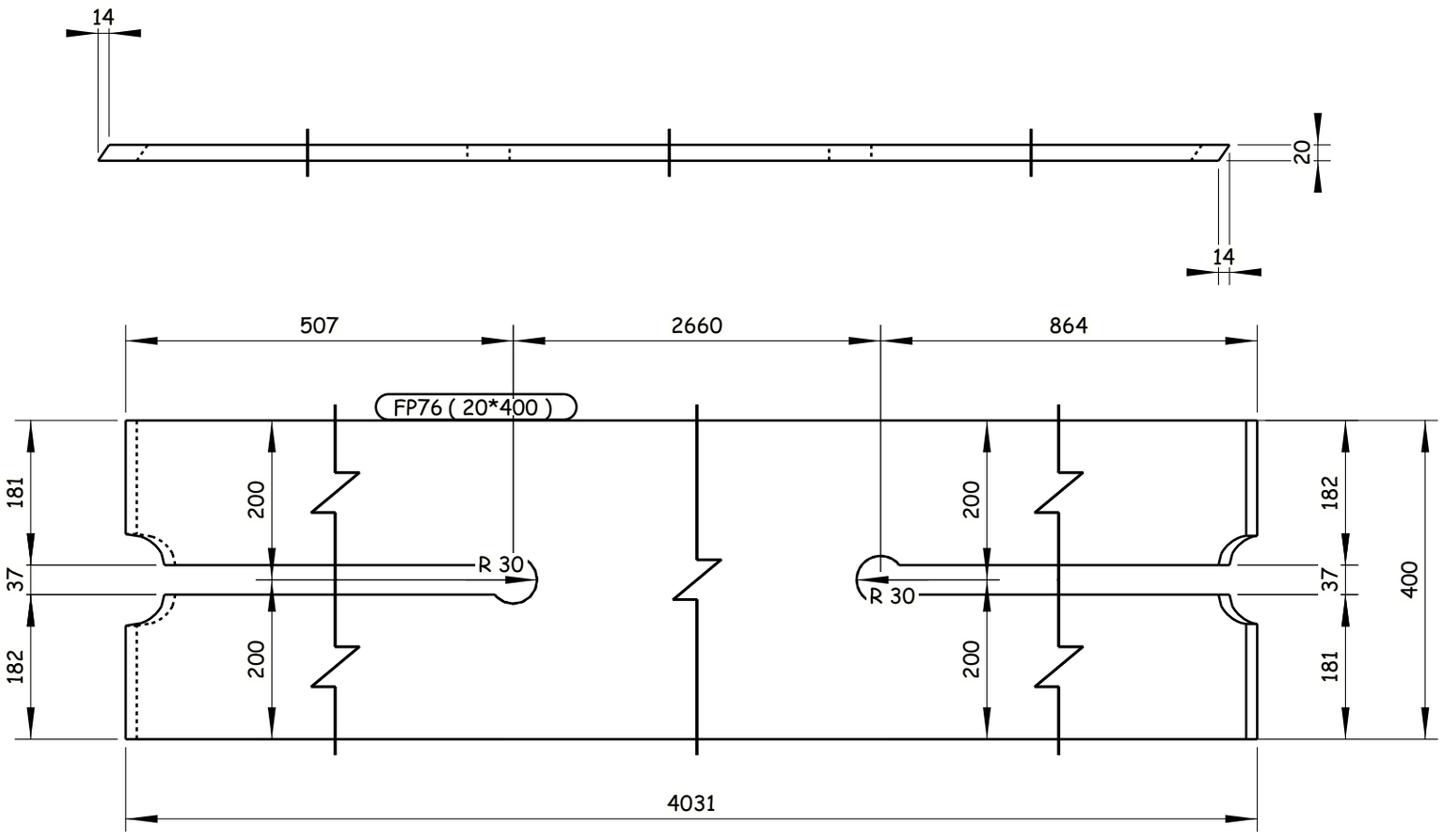

1 REQUIRED AS DRAWN E.SH FP76

GENERAL NOTES:

1. ALL DIMENSIONS ARE IN MILLIMETERS UNLESS OTHERWISE SPECIFIED.
2. LEVELS ARE IN METERS
3. DESIGN SERVICE LIFE OF 100 YEARS.
4. FLANGES OF TOP AND BOTTOM CHORDS TO BE SUPPLIED WITH IMPROVED THROUGH THICKNESS PROPERTIES Z25 ACCORDING TO EN10164.

REFERENCE DRAWINGS

1	93M-0407-SEN-6OL11-END-10118-B PAGE 01:17
2	
3	
4	
5	
6	
7	
8	
9	
10	
11	

6TH OF OCTOBER CITY RAIL TRANSIT MONORAIL &
NEW CAPITAL CITY RAIL TRANSIT MONORAIL

The Authority — Hill International Authority Consultant
ORASCOM CONSTRUCTION — BOMBARDIER — Main Contractor
SENER — SHAKER CONSULTANCY GROUP — Designer

CONTRACTOR :
CONSULTANT :
ENGINEERING HOUSE FOR CONSULTANCY

REV	DATE	BY	DESCRIPTION	CHK	APD
A	20-11-24	E.SH	ISSUE FOR APPROVAL	A.SH	M.M

SCALE: AS SHOWN | CHD DRAWING | DATE: 20.11.2024

6 October Monorail
Engineering Unit
Valid For Construction

DRAWING TITLE:
6TH OF OCTOBER MONORAIL
SHOP DRAWING FOR BRIDGE 6OL11-37
STEEL TRUSS (II).
FP76

Project Code	Rubric	Initiator	Lot	Ref	Number	Revision
93M	0407	AAC	60L11	DWG	90287	A

Tekla structures

-Drawing shall be updated according to the comments on the GA drawing.
-Approval is subjected to the approval of coordination package between multi-discipline.

REVIEWED WITH COMMENT
MONORAILS PROJECT

All holes are 22mm U.N.O Length & Area & Weight per piece

Mark	Profile	Grade	QTY	Length	Area	Weight
FP77	FLT20*400	S355J2N	1	4018.8	3.32	242.4

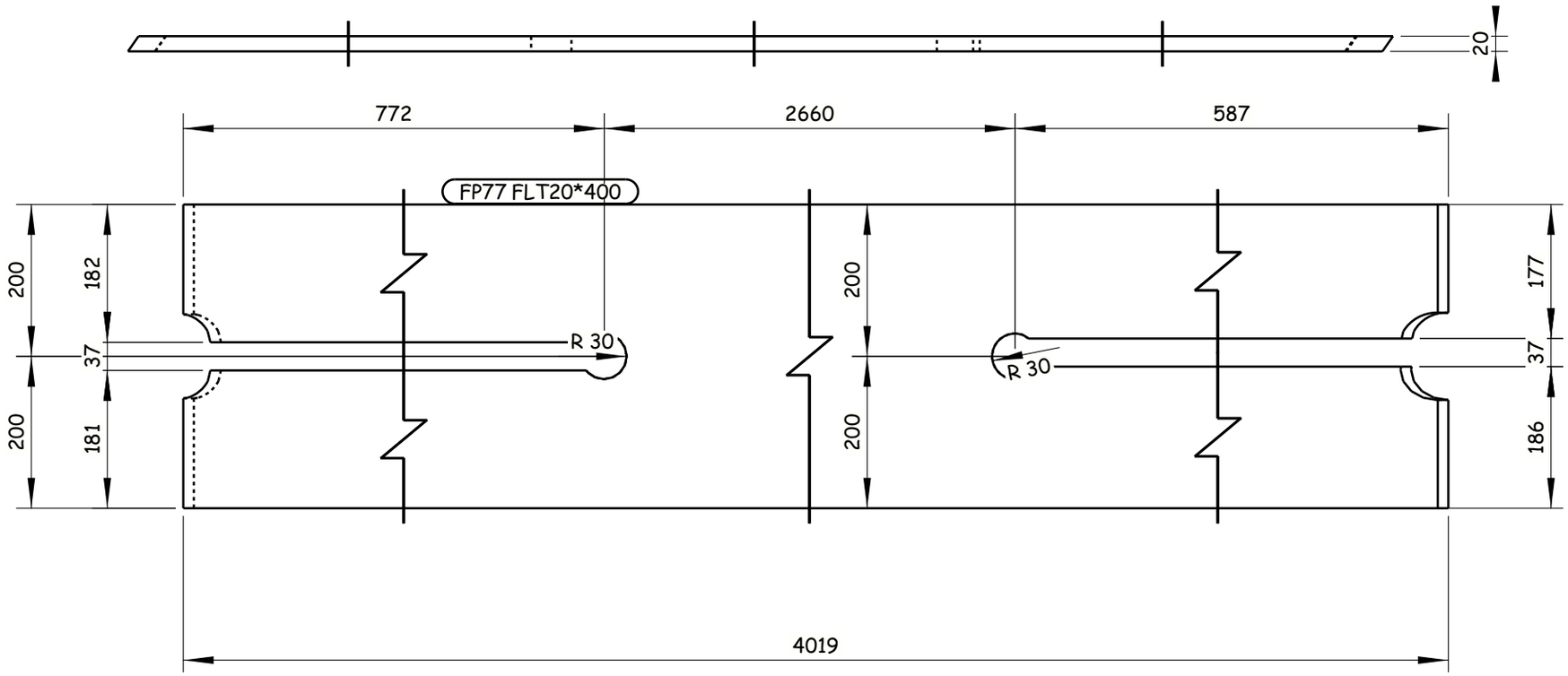

1 REQUIRED AS DRAWN E.SH FP77

Tekla structures

GENERAL NOTES:

1. ALL DIMENSIONS ARE IN MILLIMETERS UNLESS OTHERWISE SPECIFIED.
2. LEVELS ARE IN METERS
3. DESIGN SERVICE LIFE OF 100 YEARS.
4. FLANGES OF TOP AND BOTTOM CHORDS TO BE SUPPLIED WITH IMPROVED THROUGH THICKNESS PROPERTIES Z25 ACCORDING TO EN10164.

REFERENCE DRAWINGS

1	93M-0407-SEN-6OL11-END-10118-B PAGE 01:17
2	
3	
4	
5	
6	
7	
8	
9	
10	
11	

6TH OF OCTOBER CITY RAIL TRANSIT MONORAIL &
NEW CAPITAL CITY RAIL TRANSIT MONORAIL

The Authority — Hill International — Authority Consultant
ORASCOM CONSTRUCTION — Main Contractor
BOMBARDIER
SENER — SHAKER CONSULTANCY GROUP — Designer

CONTRACTOR / CONSULTANT:
ENGINEERING HOUSE FOR CONSULTANCY

6 October Monorail
Engineering Unit
Valid For Construction

SCALE	SHOP DRAWING	DATE
AS SHOWN		20.11.2024

DRAWING TITLE:
6TH OF OCTOBER MONORAIL
SHOP DRAWING FOR BRIDGE 6OL11-37
STEEL TRUSS (II).
FP77

REV	DATE	BY	DESCRIPTION	CHK	APD
A	20-11-24	E.SH	ISSUE FOR APPROVAL	A.SH	M.M

Project Code	Rubric	Initiator	Lot	Ref	Number	Revision
93M	0407	AAC	60L11	DWG	90288	A

-Drawing shall be updated according to the comments on the GA drawing.
-Approval is subjected to the approval of coordination package between multi-discipline.

REVIEWED WITH COMMENT
MONORAILS PROJECT

All holes are 22mm U.N.O Length & Area & Weight per piece

Mark	Profile	Grade	QTY	Length	Area	Weight
FP78	FLT35*400	S355J2N	1	4009.4	3.48	416.5

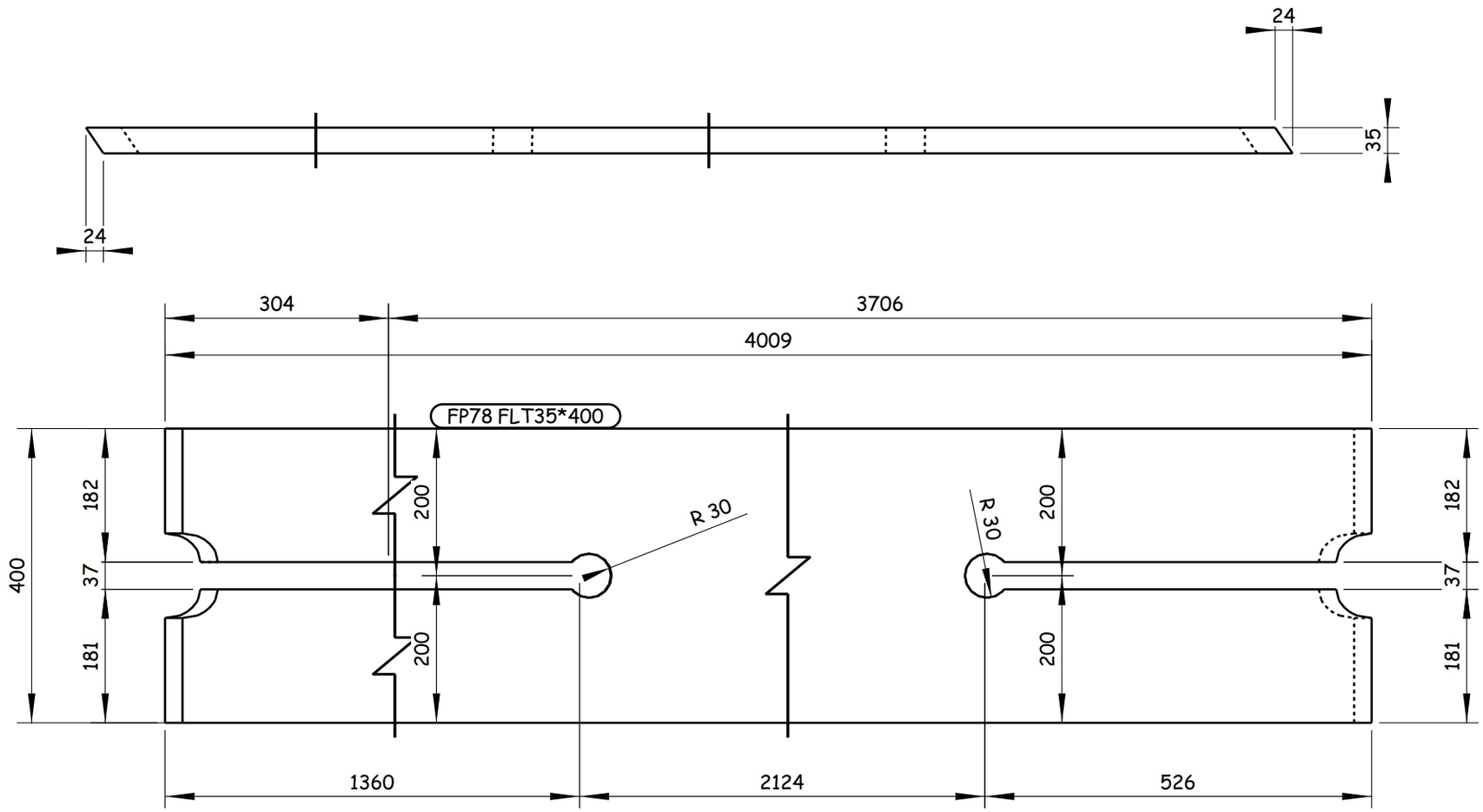

1 REQUIRED AS DRAWN E.SH FP78

GENERAL NOTES:
1. ALL DIMENSIONS ARE IN MILLIMETERS UNLESS OTHERWISE SPECIFIED.
2. LEVELS ARE IN METERS
3. DESIGN SERVICE LIFE OF 100 YEARS.
4. FLANGES OF TOP AND BOTTOM CHORDS TO BE SUPPLIED WITH IMPROVED THROUGH THICKNESS PROPERTIES Z25 ACCORDING TO EN10164.

REFERENCE DRAWINGS

1	93M-0407-SEN-6OL11-END-10118-B PAGE 01:17
2	
3	
4	
5	
6	
7	
8	
9	
10	
11	

6TH OF OCTOBER CITY RAIL TRANSIT MONORAIL &
NEW CAPITAL CITY RAIL TRANSIT MONORAIL

The Authority
Hill International
Authority Consultant

ORASCOM CONSTRUCTION
BOMBARDIER
Main Contractor

SENER
SHAKER CONSULTANCY GROUP
Designer

CONTRACTOR / CONSULTANT:
ENGINEERING HOUSE FOR CONSULTANCY

6 October Monorail
Engineering Unit
Valid For Construction

SCALE	CHD DRAWING	DATE
AS SHOWN		20.11.2024

REV	DATE	BY	DESCRIPTION	CHK	APD
A	20-11-24	E.SH	ISSUE FOR APPROVAL	A.SH	M.M

DRAWING TITLE:
6TH OF OCTOBER MONORAIL
SHOP DRAWING FOR BRIDGE 6OL11-37
STEEL TRUSS (II).
FP78

Project Code	Rubric	Initiator	Lot	Ref	Number	Revision
9 3 M	0 4 0 7	A A C	6 0 L 1 1	D W G	90289	A

Tekla structures

-Drawing shall be updated according to the comments on the GA drawing.
-Approval is subjected to the approval of coordination package between multi-discipline.

REVIEWED WITH COMMENT
MONORAILS PROJECT

All holes are 22mm U.N.O Length & Area & Weight per piece

Mark	Profile	Grade	QTY	Length	Area	Weight
FP79	FLT35*400	S355J2N	1	4010.1	3.48	416.1

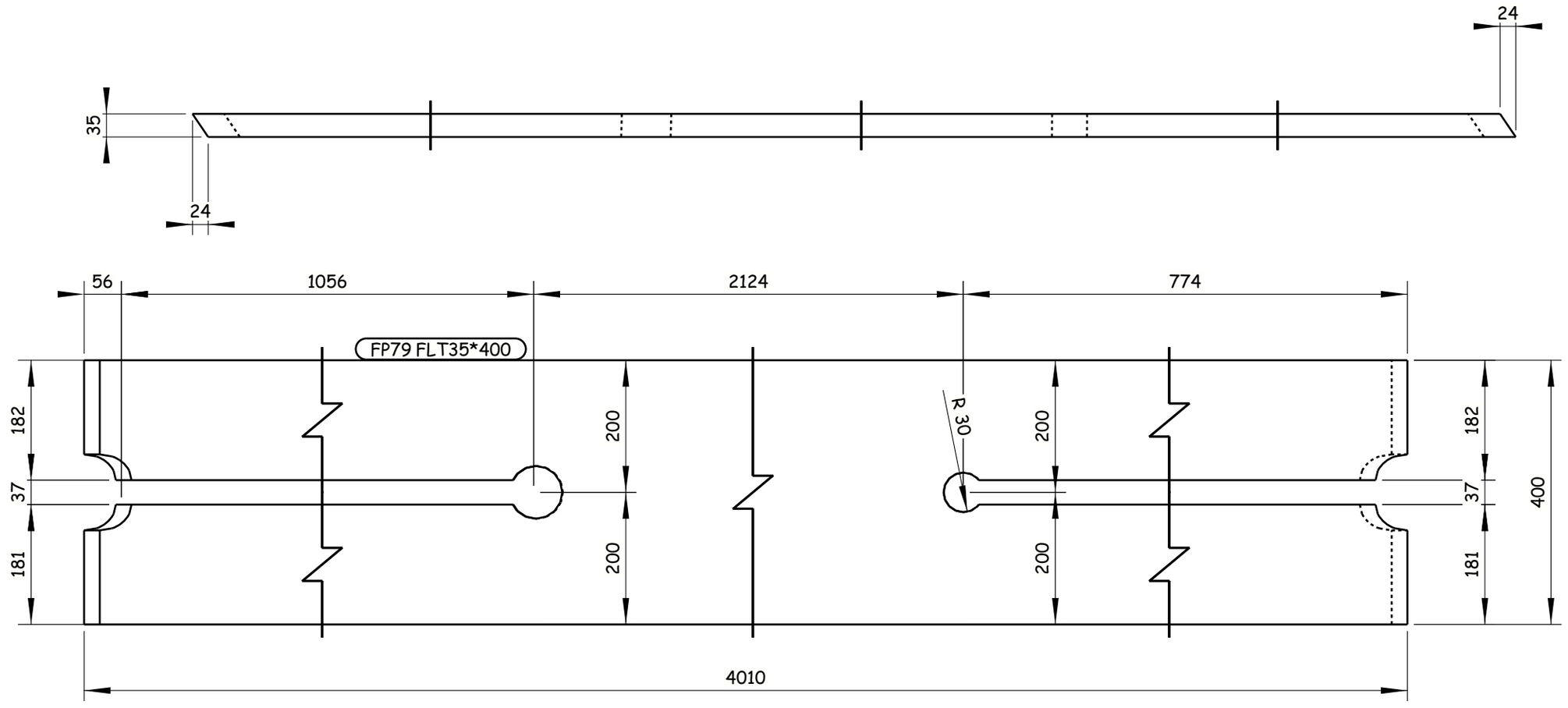

1 REQUIRED AS DRAWN E.SH FP79

6 October Monorail
Engineering Unit
Valid For Construction

GENERAL NOTES:
1. ALL DIMENSIONS ARE IN MILLIMETERS UNLESS OTHERWISE SPECIFIED.
2. LEVELS ARE IN METERS
3. DESIGN SERVICE LIFE OF 100 YEARS.
4. FLANGES OF TOP AND BOTTOM CHORDS TO BE SUPPLIED WITH IMPROVED THROUGH THICKNESS PROPERTIES Z25 ACCORDING TO EN10164.

REFERENCE DRAWINGS

1	93M-0407-SEN-6OL11-END-10118-B PAGE 01:17
2	
3	
4	
5	
6	
7	
8	
9	
10	
11	

6TH OF OCTOBER CITY RAIL TRANSIT MONORAIL &
NEW CAPITAL CITY RAIL TRANSIT MONORAIL

The Authority — Hill International — Authority Consultant
Main Contractor
Designer

CONTRACTOR / CONSULTANT :
ENGINEERING HOUSE FOR CONSULTANCY

SCALE: AS SHOWN | SHOP DRAWING | DATE: 20.11.2024

REV	DATE	BY	DESCRIPTION	CHK	APD
A	20-11-24	E.SH	ISSUE FOR APPROVAL	A.SH	M.M

DRAWING TITLE:
6TH OF OCTOBER MONORAIL
SHOP DRAWING FOR BRIDGE 6OL11-37
STEEL TRUSS (II).
FP79

Project Code	Rubric	Initiator	Lot	Ref	Number	Revision
9 3 M 0	4 0 7	A A C	6 0 L 1 1	D W G	90290	A

Tekla structures

-Drawing shall be updated according to the comments on the GA drawing.
-Approval is subjected to the approval of coordination package between multi-discipline.

REVIEWED WITH COMMENT
MONORAILS PROJECT

All holes are 22mm U.N.O Length & Area & Weight per piece

Mark	Profile	Grade	QTY	Length	Area	Weight
FP80	FLT35*400	S355J2N	1	4009.4	3.47	416.0

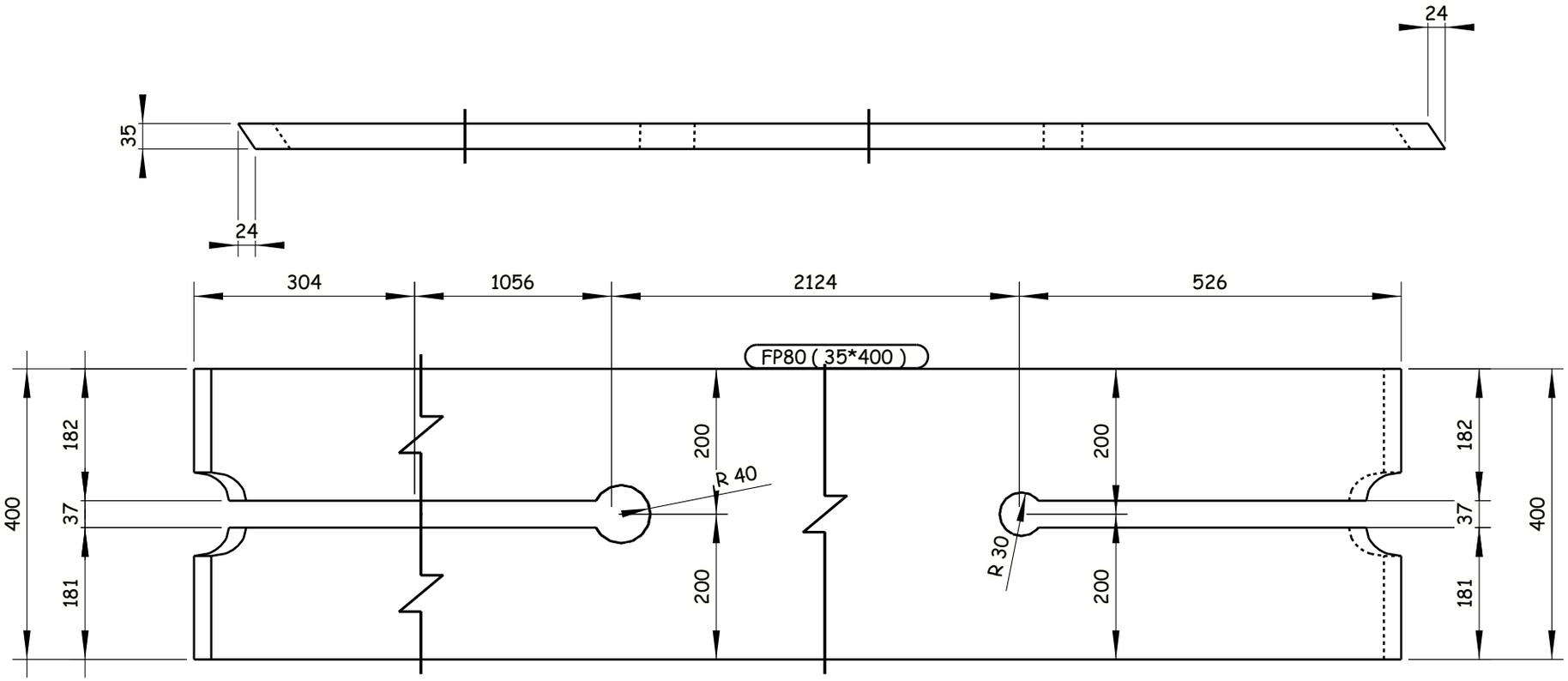

1 REQUIRED AS DRAWN E.SH FP80

GENERAL NOTES:

1. ALL DIMENSIONS ARE IN MILLIMETERS UNLESS OTHERWISE SPECIFIED.
2. LEVELS ARE IN METERS
3. DESIGN SERVICE LIFE OF 100 YEARS.
4. FLANGES OF TOP AND BOTTOM CHORDS TO BE SUPPLIED WITH IMPROVED THROUGH THICKNESS PROPERTIES Z25 ACCORDING TO EN10164.

REFERENCE DRAWINGS

1	93M-0407-SEN-6OL11-END-10118-B PAGE 01:17
2	
3	
4	
5	
6	
7	
8	
9	
10	
11	

6TH OF OCTOBER CITY RAIL TRANSIT MONORAIL &
NEW CAPITAL CITY RAIL TRANSIT MONORAIL

The Authority — Hill International Authority Consultant — Main Contractor — Designer

CONTRACTOR / CONSULTANT :

ENGINEERING HOUSE FOR CONSULTANCY

SCALE AS SHOWN | CHD DRAWING | DATE 20.11.2024

REV	DATE	BY	DESCRIPTION	CHK	APD
A	20-11-24	E.SH	ISSUE FOR APPROVAL	A.SH	M.M

6 October Monorail
Engineering Unit
Valid For Construction

DRAWING TITLE:
6TH OF OCTOBER MONORAIL
SHOP DRAWING FOR BRIDGE 6OL11-37
STEEL TRUSS (II).
FP80

Project Code	Rubric	Initiator	Lot	Ref	Number	Revision
9 3 M	0 4 0 7	A A C	6 0 L 1 1	D W G	90291	A

Tekla structures

-Drawing shall be updated according to the comments on the GA drawing.
-Approval is subjected to the approval of coordination package between multi-discipline.

REVIEWED WITH COMMENT
MONORAILS PROJECT

All holes are 22mm U.N.O Length & Area & Weight per piece

Mark	Profile	Grade	QTY	Length	Area	Weight
FP81	PL45*720	S355K2N	1	16103.7	24.81	4014.1

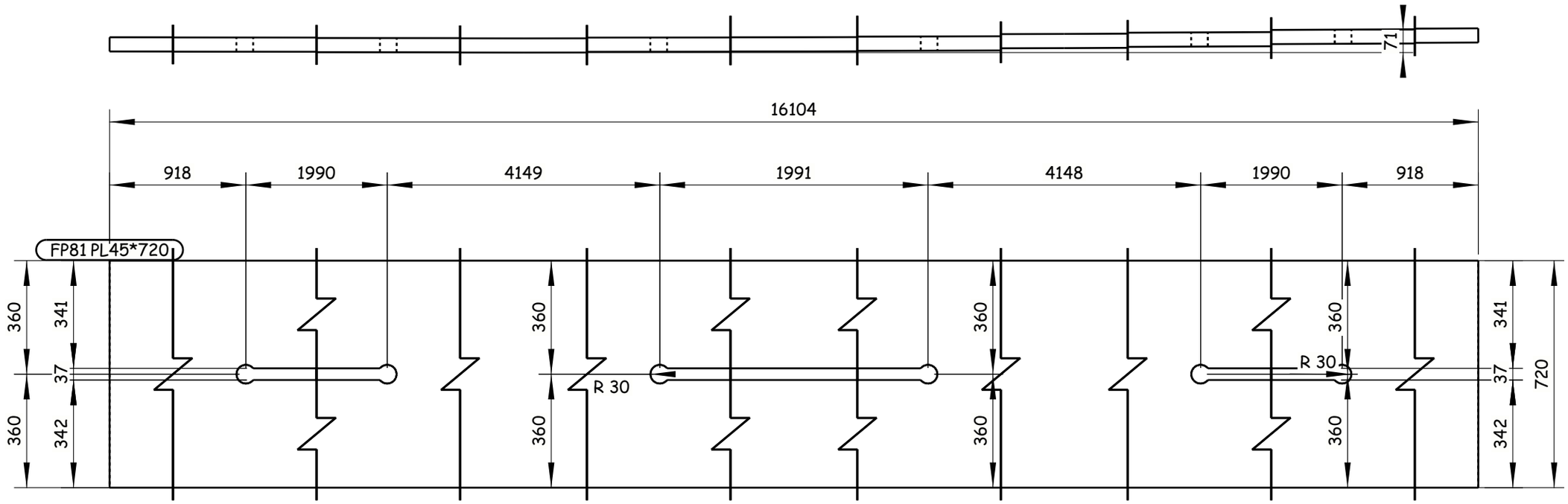

1 REQUIRED AS DRAWN E.SH FP81

6 October Monorail
Engineering Unit
Valid For Construction

GENERAL NOTES:

1. ALL DIMENSIONS ARE IN MILLIMETERS UNLESS OTHERWISE SPECIFIED.
2. LEVELS ARE IN METERS
3. DESIGN SERVICE LIFE OF 100 YEARS.
4. FLANGES OF TOP AND BOTTOM CHORDS TO BE SUPPLIED WITH IMPROVED THROUGH THICKNESS PROPERTIES Z25 ACCORDING TO EN10164.

REFERENCE DRAWINGS

1	93M-0407-SEN-6OL11-END-10118-B PAGE 01:17
2	
3	
4	
5	
6	
7	
8	
9	
10	
11	

6TH OF OCTOBER CITY RAIL TRANSIT MONORAIL &
NEW CAPITAL CITY RAIL TRANSIT MONORAIL

The Authority
Hill International
Authority Consultant

ORASCOM CONSTRUCTION
Main Contractor

BOMBARDIER
SENER
SHAKER CONSULTANCY GROUP
Designer

CONTRACTOR & CONSULTANT:
ENGINEERING HOUSE FOR CONSULTANCY

SCALE: AS SHOWN | SHOP DRAWING | DATE: 20.11.2024

REV.	DATE	BY	DESCRIPTION	CHK	APD
A	20-11-24	E.SH	ISSUE FOR APPROVAL	A.SH	M.M

DRAWING TITLE:
6TH OF OCTOBER MONORAIL
SHOP DRAWING FOR BRIDGE 6OL11-37
STEEL TRUSS (II).
FP81

Project Code	Rubric	Initiator	Lot	Ref	Number	Revision
93M	0407	AAC	60L11	DWG	90292	A

Tekla structures

All holes are 22mm U.N.O Length & Area & Weight per piece						
GP8	PL35*2487.5	S355J2N	2	2770.9	11.48	1519.6
Mark	Profile	Grade	QTY	Length	Area	Weight

-Drawing shall be updated according to the comments on the GA drawing.
-Approval is subjected to the approval of coordination package between multi-discipline.

REVIEWED WITH COMMENT
MONORAILS PROJECT

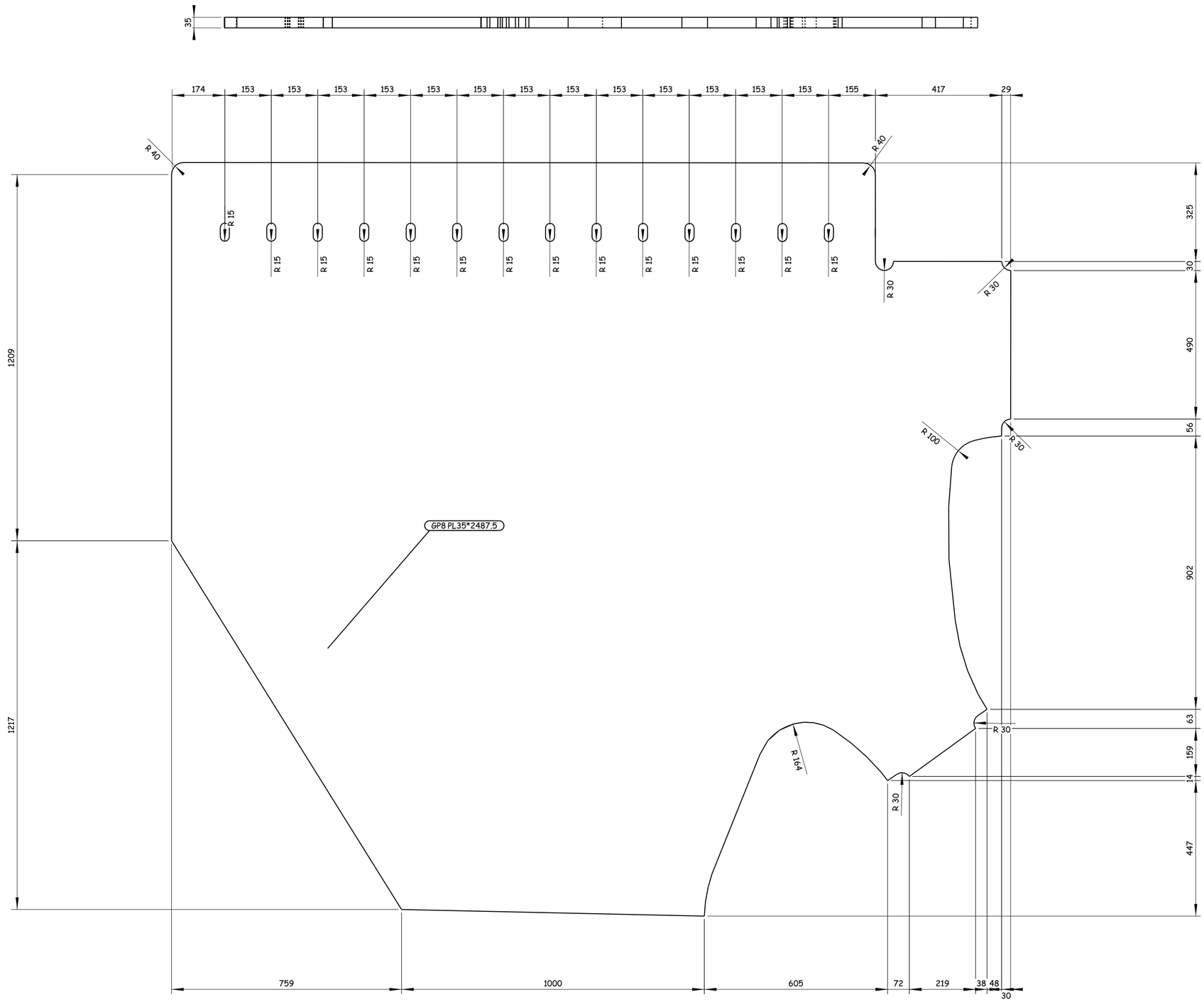

2 REQUIRED AS DRAWN E.SH GP8

6 October Monorail
Engineering Unit
Valid For Construction

GENERAL NOTES:

1. ALL DIMENSIONS ARE IN MILLIMETERS UNLESS OTHERWISE SPECIFIED.
2. LEVELS ARE IN METERS
3. DESIGN SERVICE LIFE OF 100 YEARS.
4. FLANGES OF TOP AND BOTTOM CHORDS TO BE SUPPLIED WITH IMPROVED THROUGH THICKNESS PROPERTIES Z25 ACCORDING TO EN10164.

REFERENCE DRAWINGS

1	93M-0407-SEN-6OL11-END-10118-B PAGE 01:17
2	
3	
4	
5	
6	
7	
8	
9	
10	
11	

6TH OF OCTOBER CITY RAIL TRANSIT MONORAIL &
NEW CAPITAL CITY RAIL TRANSIT MONORAIL

The Authority — Hill International — Authority Consultant
Main Contractor
Designer

CONTRACTOR
CONSULTANT: ENGINEERING HOUSE FOR CONSULTANCY

SCALE: AS SHOWN
SHOP DRAWING
DATE: 20.11.2024

REV	DATE	BY	DESCRIPTION	CHK	APD
A	20-11-24	E.SH	ISSUE FOR APPROVAL	A.SH	M.M

DRAWING TITLE:
6TH OF OCTOBER MONORAIL
SHOP DRAWING FOR BRIDGE 6OL11-37
STEEL TRUSS (II).
GP8

Project Code	Rubric	Initiator	Lot	Ref	Number	Revision
9 3 M	0 4 0 7	A A C	6 0 L 1 1	D W G	90293	A

Tekla structures

-Drawing shall be updated according to the comments on the GA drawing.
-Approval is subjected to the approval of coordination package between multi-discipline.

REVIEWED WITH COMMENT
MONORAILS PROJECT

All holes are 22mm U.N.O Length & Area & Weight per piece						
GP10	PL35*2480.2	S355J2N	2	2771.0	11.48	1519.3
Mark	Profile	Grade	QTY	Length	Area	Weight

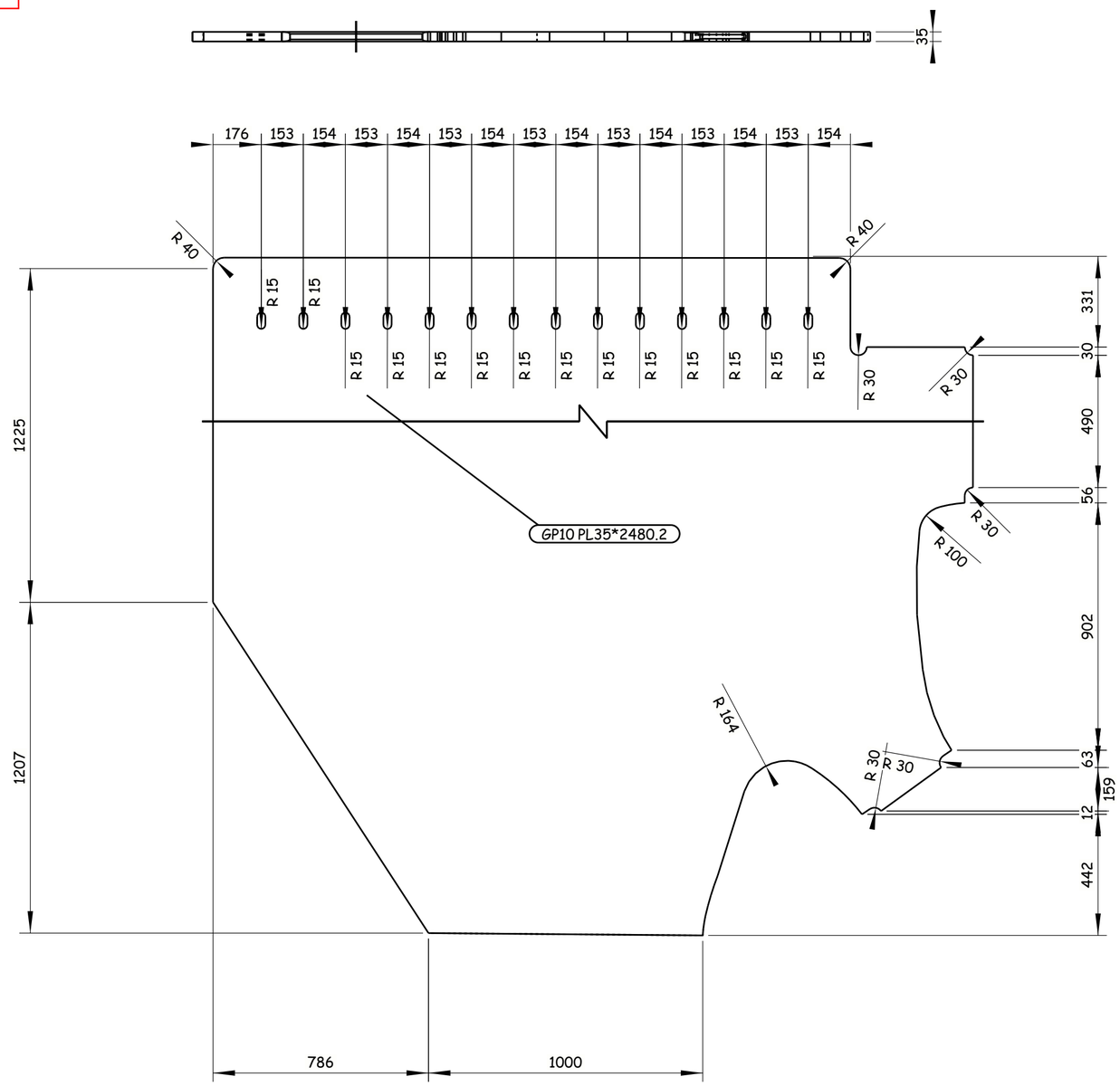

2 REQUIRED AS DRAWN E.SH GP10

GENERAL NOTES:

1. ALL DIMENSIONS ARE IN MILLIMETERS UNLESS OTHERWISE SPECIFIED.
2. LEVELS ARE IN METERS
3. DESIGN SERVICE LIFE OF 100 YEARS.
4. FLANGES OF TOP AND BOTTOM CHORDS TO BE SUPPLIED WITH IMPROVED THROUGH THICKNESS PROPERTIES Z25 ACCORDING TO EN10164.

REFERENCE DRAWINGS

1	93M-0407-SEN-6OL11-END-10118-B PAGE 01:17
2	
3	
4	
5	
6	
7	
8	
9	
10	
11	

6TH OF OCTOBER CITY RAIL TRANSIT MONORAIL &
NEW CAPITAL CITY RAIL TRANSIT MONORAIL

The Authority | Hill International Authority Consultant | Main Contractor | Designer

CONTRACTOR
CONSULTANT:
ENGINEERING HOUSE FOR CONSULTANCY

SCALE		SHOP DRAWING	DATE
AS SHOWN			20.11.2024

REV	DATE	BY	DESCRIPTION	CHK	APD
A	20-11-24	E.SH	ISSUE FOR APPROVAL	A.SH	M.M

6 October Monorail
Engineering Unit
Valid For Construction

DRAWING TITLE:
6TH OF OCTOBER MONORAIL
SHOP DRAWING FOR BRIDGE 6OL11-37
STEEL TRUSS (II).
GP10

Project Code	Rubric	Initiator	Lot	Ref	Number	Revision
9 3 M	0 4 0 7	A A C	6 0 L 1 1	D W G	90294	A

Tekla structures

-Drawing shall be updated according to the comments on the GA drawing.
-Approval is subjected to the approval of coordination package between multi-discipline.

REVIEWED WITH COMMENT
MONORAILS PROJECT

All holes are 22mm U.N.O Length & Area & Weight per piece

Mark	Profile	Grade	QTY	Length	Area	Weight
IS1	FLT20*180	S355J2N	57	508.0	0.20	14.0

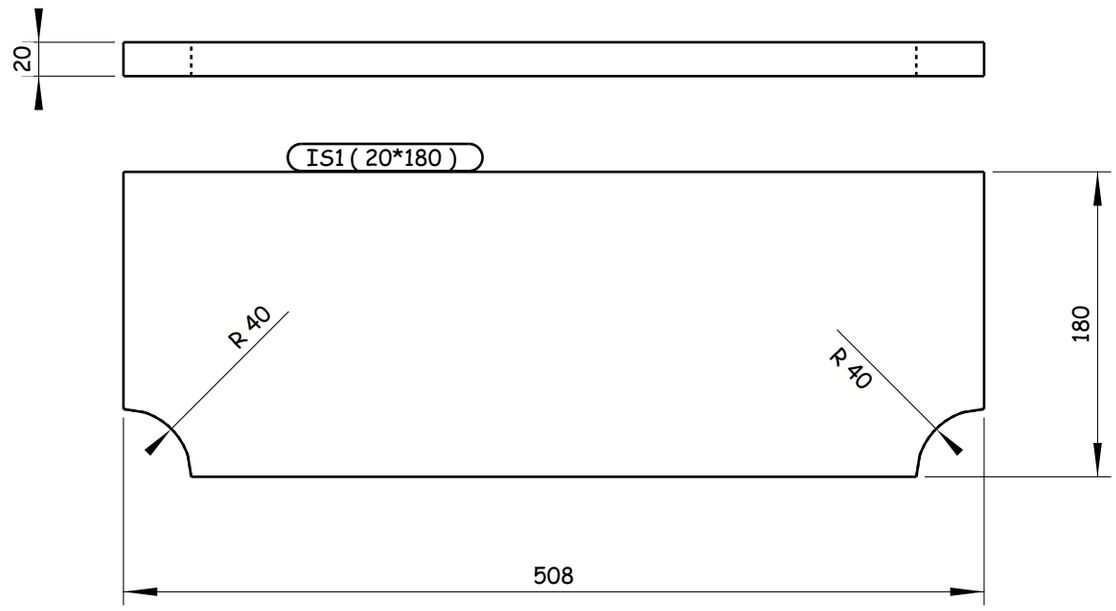

57 REQUIRED AS DRAWN E.SH IS1

Tekla structures

GENERAL NOTES:

1. ALL DIMENSIONS ARE IN MILLIMETERS UNLESS OTHERWISE SPECIFIED.
2. LEVELS ARE IN METERS
3. DESIGN SERVICE LIFE OF 100 YEARS.
4. FLANGES OF TOP AND BOTTOM CHORDS TO BE SUPPLIED WITH IMPROVED THROUGH THICKNESS PROPERTIES Z25 ACCORDING TO EN10164.

REFERENCE DRAWINGS

1	93M-0407-SEN-6OL11-END-10118-B PAGE 01:17
2	
3	
4	
5	
6	
7	
8	
9	
10	
11	

6TH OF OCTOBER CITY RAIL TRANSIT MONORAIL &
NEW CAPITAL CITY RAIL TRANSIT MONORAIL

The Authority — Hill International Authority Consultant — Main Contractor — Designer

CONTRACTOR & CONSULTANT:

ENGINEERING HOUSE FOR CONSULTANCY

6 October Monorail
Engineering Unit
Valid For Construction

SCALE: AS SHOWN | SHD DRAWING | DATE: 20.11.2024

REV	DATE	BY	DESCRIPTION	CHK	APD
A	20-11-24	E.SH	ISSUE FOR APPROVAL	A.SH	M.M

DRAWING TITLE:
6TH OF OCTOBER MONORAIL
SHOP DRAWING FOR BRIDGE 6OL11-37
STEEL TRUSS (II).
IS1

Project Code	Rubric	Initiator	Lot	Ref	Number	Revision
93M	0407	AAC	60L11	DWG	90295	A

-Drawing shall be updated according to the comments on the GA drawing.
-Approval is subjected to the approval of coordination package between multi-discipline.

REVIEWED WITH COMMENT
MONORAILS PROJECT

All holes are 22mm U.N.O Length & Area & Weight per piece

Mark	Profile	Grade	QTY	Length	Area	Weight
IS2	FLT20*180	S355J2N	32	538.0	0.22	14.8

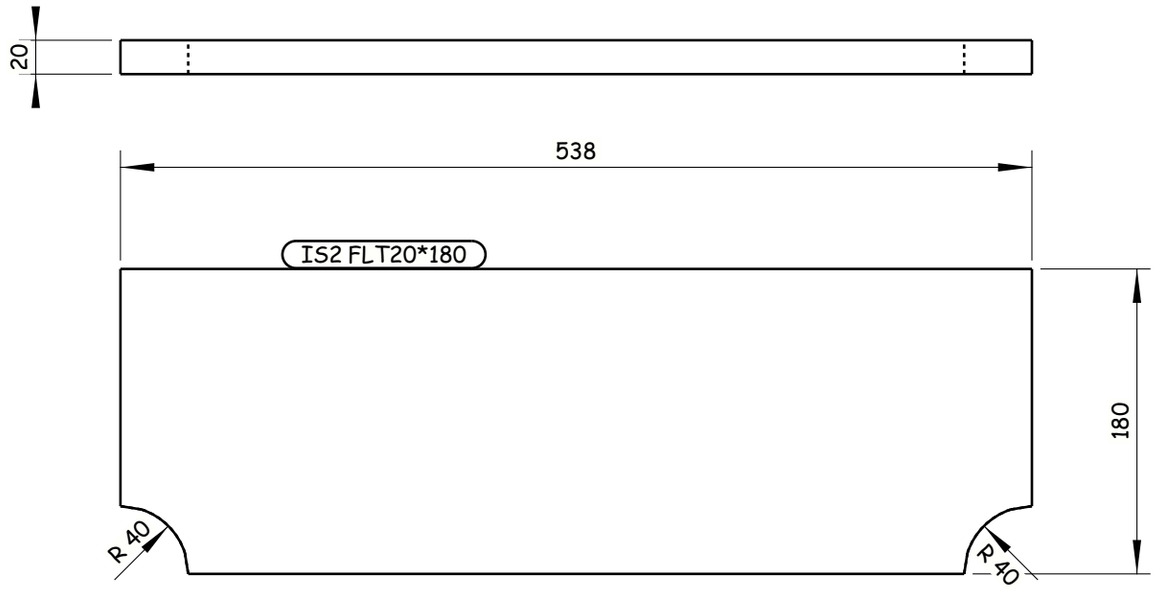

32 REQUIRED AS DRAWN E.SH IS2

GENERAL NOTES:

1. ALL DIMENSIONS ARE IN MILLIMETERS UNLESS OTHERWISE SPECIFIED.
2. LEVELS ARE IN METERS
3. DESIGN SERVICE LIFE OF 100 YEARS.
4. FLANGES OF TOP AND BOTTOM CHORDS TO BE SUPPLIED WITH IMPROVED THROUGH THICKNESS PROPERTIES Z25 ACCORDING TO EN10164.

REFERENCE DRAWINGS

1	93M-0407-SEN-6OL11-END-10118-B PAGE 01:17
2	
3	
4	
5	
6	
7	
8	
9	
10	
11	

6TH OF OCTOBER CITY RAIL TRANSIT MONORAIL &
NEW CAPITAL CITY RAIL TRANSIT MONORAIL

The Authority — Hill International — Authority Consultant
ORASCOM CONSTRUCTION — Main Contractor
BOMBARDIER
SENER — SHAKER CONSULTANCY GROUP — Designer

CONTRACTOR & CONSULTANT:
ENGINEERING HOUSE FOR CONSULTANCY

SCALE: AS SHOWN
CHK'D DRAWING
DATE: 20.11.2024

REV	DATE	BY	DESCRIPTION	CHK	APD
A	20-11-24	E.SH	ISSUE FOR APPROVAL	A.SH	M.M

6 October Monorail
Engineering Unit
Valid For Construction

DRAWING TITLE:
6TH OF OCTOBER MONORAIL
SHOP DRAWING FOR BRIDGE 6OL11-37
STEEL TRUSS (II).
IS2

Project Code	Rubric	Initiator	Lot	Ref	Number	Revision
93M	0407	AAC	60L11	DWG	90296	A

Tekla structures

-Drawing shall be updated according to the comments on the GA drawing.
-Approval is subjected to the approval of coordination package between multi-discipline.

REVIEWED WITH COMMENT
MONORAILS PROJECT

All holes are 22mm U.N.O Length & Area & Weight per piece

Mark	Profile	Grade	QTY	Length	Area	Weight
IS3	PL25*230	S355J2N	48	518.0	0.27	22.9

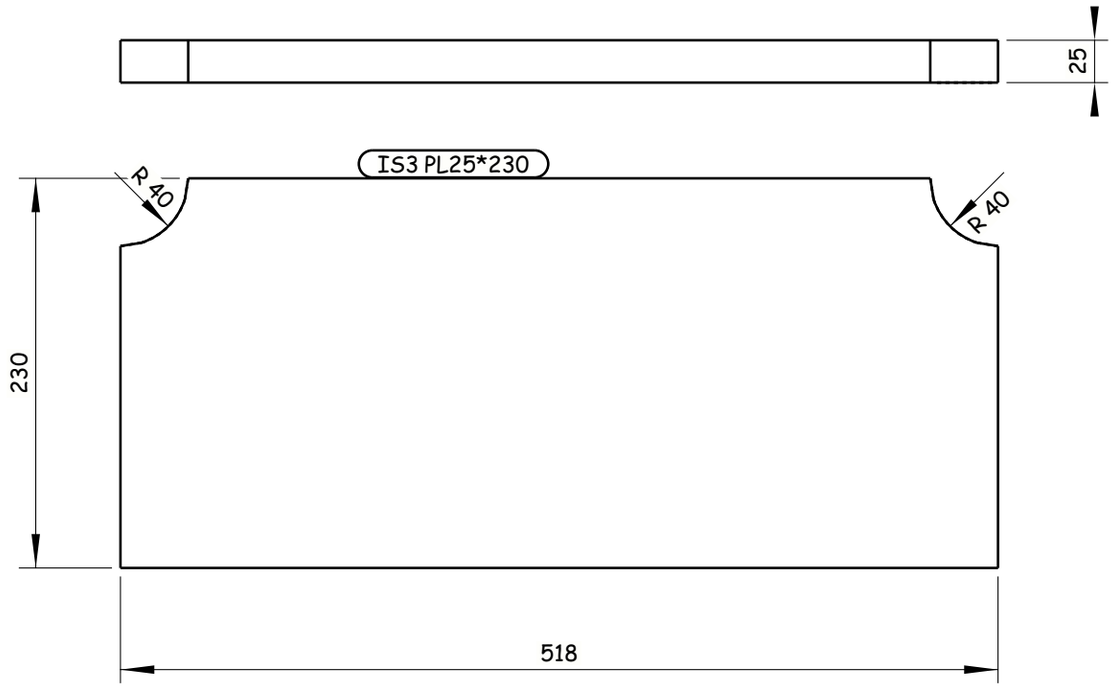

48 REQUIRED AS DRAWN E.SH IS3

Tekla structures

GENERAL NOTES:

1. ALL DIMENSIONS ARE IN MILLIMETERS UNLESS OTHERWISE SPECIFIED.
2. LEVELS ARE IN METERS
3. DESIGN SERVICE LIFE OF 100 YEARS.
4. FLANGES OF TOP AND BOTTOM CHORDS TO BE SUPPLIED WITH IMPROVED THROUGH THICKNESS PROPERTIES Z25 ACCORDING TO EN10164.

REFERENCE DRAWINGS

1	93M-0407-SEN-6OL11-END-10118-B PAGE 01:17
2	
3	
4	
5	
6	
7	
8	
9	
10	
11	

6TH OF OCTOBER CITY RAIL TRANSIT MONORAIL &
NEW CAPITAL CITY RAIL TRANSIT MONORAIL

The Authority
Hill International
Authority Consultant

Main Contractor

Designer

CONTRACTOR & CONSULTANT:
ENGINEERING HOUSE FOR CONSULTANCY

SCALE: AS SHOWN | CHK'D DRAWING | DATE: 20.11.2024

REV	DATE	BY	DESCRIPTION	CHK	APD
A	20-11-24	E.SH	ISSUE FOR APPROVAL	A.SH	M.M

6 October Monorail
Engineering Unit
Valid For Construction

DRAWING TITLE:
6TH OF OCTOBER MONORAIL
SHOP DRAWING FOR BRIDGE 6OL11-37
STEEL TRUSS (II).
IS3

Project Code	Rubric	Initiator	Lot	Ref	Number	Revision
93M	0407	AAC	60L11	DWG	90297	A

-Drawing shall be updated according to the comments on the GA drawing.
-Approval is subjected to the approval of coordination package between multi-discipline.

REVIEWED WITH COMMENT
MONORAILS PROJECT

All holes are 22mm U.N.O Length & Area & Weight per piece

Mark	Profile	Grade	QTY	Length	Area	Weight
IS4	PL25*282.5	S355J2N	12	518.0	0.33	28.2

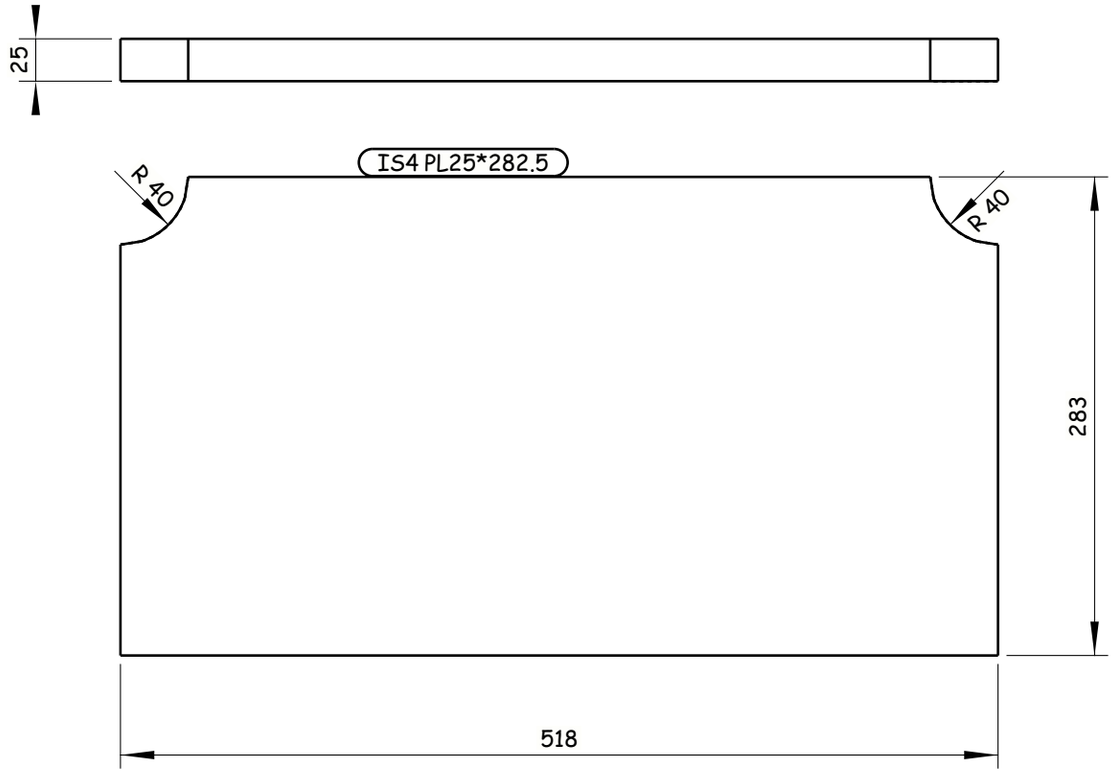

12 REQUIRED AS DRAWN E.SH IS4

Tekla structures

GENERAL NOTES:

1. ALL DIMENSIONS ARE IN MILLIMETERS UNLESS OTHERWISE SPECIFIED.
2. LEVELS ARE IN METERS
3. DESIGN SERVICE LIFE OF 100 YEARS.
4. FLANGES OF TOP AND BOTTOM CHORDS TO BE SUPPLIED WITH IMPROVED THROUGH THICKNESS PROPERTIES Z25 ACCORDING TO EN10164.

REFERENCE DRAWINGS

1	93M-0407-SEN-6OL11-END-10118-B PAGE 01:17
2	
3	
4	
5	
6	
7	
8	
9	
10	
11	

6TH OF OCTOBER CITY RAIL TRANSIT MONORAIL &
NEW CAPITAL CITY RAIL TRANSIT MONORAIL

The Authority — Hill International — Authority Consultant
Main Contractor
Designer

CONTRACTOR & CONSULTANT:
ENGINEERING HOUSE FOR CONSULTANCY

SCALE: AS SHOWN | CHK'D DRAWING | DATE: 20.11.2024

REV	DATE	BY	DESCRIPTION	CHK	APD
A	20-11-24	E.SH	ISSUE FOR APPROVAL	A.SH	M.M

6 October Monorail
Engineering Unit
Valid For Construction

DRAWING TITLE:
6TH OF OCTOBER MONORAIL
SHOP DRAWING FOR BRIDGE 6OL11-37
STEEL TRUSS (II).
IS4

Project Code	Rubric	Initiator	Lot	Ref	Number	Revision
9 3 M	0 4 0 7	A A C	6 0 L 1 1	D W G	90298	A

-Drawing shall be updated according to the comments on the GA drawing.
-Approval is subjected to the approval of coordination package between multi-discipline.

REVIEWED WITH COMMENT
MONORAILS PROJECT

All holes are 22mm U.N.O Length & Area & Weight per piece

Mark	Profile	Grade	QTY	Length	Area	Weight
IS5	PL25*230	S355J2N	40	548.0	0.29	24.3

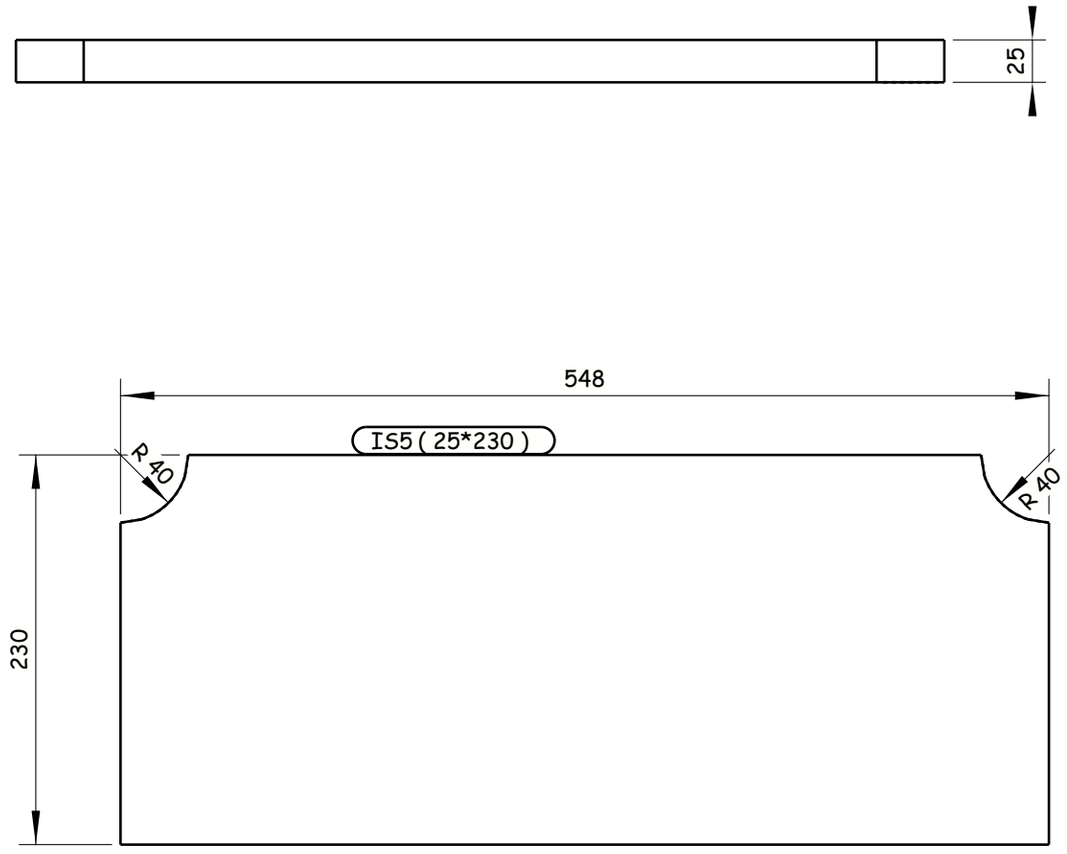

40 REQUIRED AS DRAWN E.SH IS5

6 October Monorail
Engineering Unit
Valid For Construction

Tekla structures

GENERAL NOTES:

1. ALL DIMENSIONS ARE IN MILLIMETERS UNLESS OTHERWISE SPECIFIED.
2. LEVELS ARE IN METERS
3. DESIGN SERVICE LIFE OF 100 YEARS.
4. FLANGES OF TOP AND BOTTOM CHORDS TO BE SUPPLIED WITH IMPROVED THROUGH THICKNESS PROPERTIES Z25 ACCORDING TO EN10164.

REFERENCE DRAWINGS

1	93M-0407-SEN-6OL11-END-10118-B PAGE 01:17
2	
3	
4	
5	
6	
7	
8	
9	
10	
11	

6TH OF OCTOBER CITY RAIL TRANSIT MONORAIL &
NEW CAPITAL CITY RAIL TRANSIT MONORAIL

The Authority — Hill International Authority Consultant — Main Contractor — Designer

CONTRACTOR & CONSULTANT:
ENGINEERING HOUSE FOR CONSULTANCY

SCALE: AS SHOWN | SHOP DRAWING | DATE: 20.11.2024

REV.	DATE	BY	DESCRIPTION	CHK	APD
A	20-11-24	E.SH	ISSUE FOR APPROVAL	A.SH	M.M

DRAWING TITLE:
6TH OF OCTOBER MONORAIL
SHOP DRAWING FOR BRIDGE 6OL11-37
STEEL TRUSS (II).
IS5

Project Code	Rubric	Initiator	Lot	Ref	Number	Revision
93M	0407	AAC	60L11	DWG	90299	A

-Drawing shall be updated according to the comments on the GA drawing.
-Approval is subjected to the approval of coordination package between multi-discipline.

REVIEWED WITH COMMENT
MONORAILS PROJECT

All holes are 22mm U.N.O Length & Area & Weight per piece

Mark	Profile	Grade	QTY	Length	Area	Weight
IS6	PL25*282.5	S355J2N	12	548.0	0.35	29.9

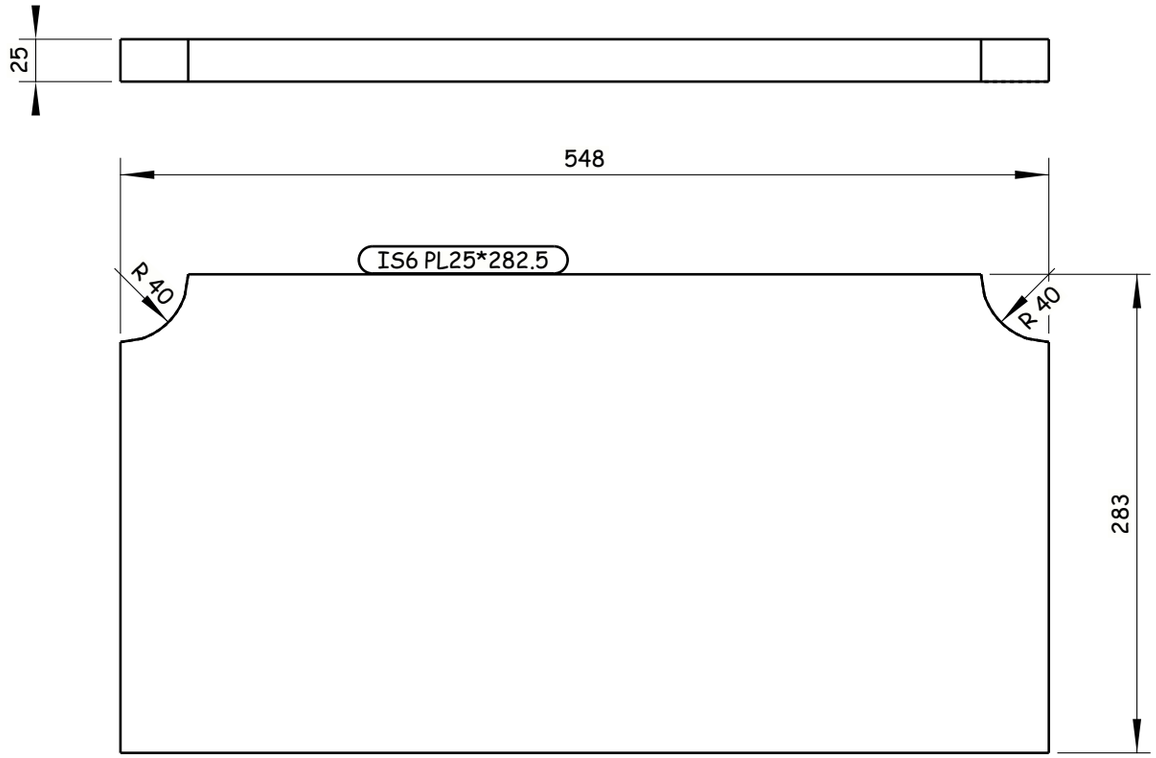

12 REQUIRED AS DRAWN E.SH IS6

Tekla structures

GENERAL NOTES:

1. ALL DIMENSIONS ARE IN MILLIMETERS UNLESS OTHERWISE SPECIFIED.
2. LEVELS ARE IN METERS
3. DESIGN SERVICE LIFE OF 100 YEARS.
4. FLANGES OF TOP AND BOTTOM CHORDS TO BE SUPPLIED WITH IMPROVED THROUGH THICKNESS PROPERTIES Z25 ACCORDING TO EN10164.

REFERENCE DRAWINGS

1	93M-0407-SEN-6OL11-END-10118-B PAGE 01:17
2	
3	
4	
5	
6	
7	
8	
9	
10	
11	

6TH OF OCTOBER CITY RAIL TRANSIT MONORAIL &
NEW CAPITAL CITY RAIL TRANSIT MONORAIL

The Authority
Hill International
Authority Consultant

ORASCOM CONSTRUCTION
Main Contractor

BOMBARDIER
SENER
SHAKER CONSULTANCY GROUP
Designer

CONTRACTOR & CONSULTANT:
ENGINEERING HOUSE FOR CONSULTANCY

6 October Monorail
Engineering Unit
Valid For Construction

SCALE	SHOP DRAWING	DATE
AS SHOWN		20.11.2024

REV	DATE	BY	DESCRIPTION	CHK	APD
A	20-11-24	E.SH	ISSUE FOR APPROVAL	A.SH	M.M

DRAWING TITLE:
6TH OF OCTOBER MONORAIL
SHOP DRAWING FOR BRIDGE 6OL11-37
STEEL TRUSS (II).
IS6

Project Code	Rubric	Initiator	Lot	Ref	Number	Revision
93M	0407	AAC	60L11	DWG	90300	A

-Drawing shall be updated according to the comments on the GA drawing.
-Approval is subjected to the approval of coordination package between multi-discipline.

REVIEWED WITH COMMENT
MONORAILS PROJECT

All holes are 22mm U.N.O Length & Area & Weight per piece

Mark	Profile	Grade	QTY	Length	Area	Weight
IS7	PL30*230	S355J2N	8	548.0	0.29	29.1

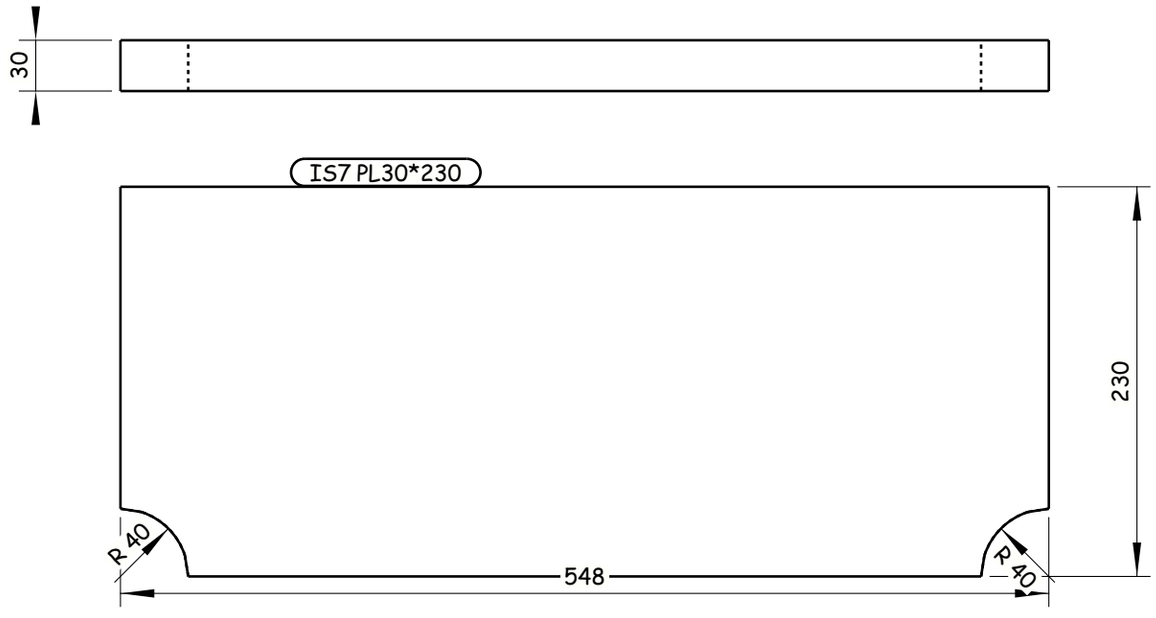

8 REQUIRED AS DRAWN E.SH IS7

Tekla structures

GENERAL NOTES:

1. ALL DIMENSIONS ARE IN MILLIMETERS UNLESS OTHERWISE SPECIFIED.
2. LEVELS ARE IN METERS
3. DESIGN SERVICE LIFE OF 100 YEARS.
4. FLANGES OF TOP AND BOTTOM CHORDS TO BE SUPPLIED WITH IMPROVED THROUGH THICKNESS PROPERTIES Z25 ACCORDING TO EN10164.

REFERENCE DRAWINGS

1	93M-0407-SEN-6OL11-END-10118-B PAGE 01:17
2	
3	
4	
5	
6	
7	
8	
9	
10	
11	

6TH OF OCTOBER CITY RAIL TRANSIT MONORAIL &
NEW CAPITAL CITY RAIL TRANSIT MONORAIL

The Authority
Hill International
Authority Consultant

Main Contractor

Designer

CONTRACTOR & CONSULTANT:
ENGINEERING HOUSE FOR CONSULTANCY

SCALE: AS SHOWN | CHK'D DRAWING | DATE: 20.11.2024

REV	DATE	BY	DESCRIPTION	CHK	APD
A	20-11-24	E.SH	ISSUE FOR APPROVAL	A.SH	M.M

6 October Monorail
Engineering Unit
Valid For Construction

DRAWING TITLE:
6TH OF OCTOBER MONORAIL
SHOP DRAWING FOR BRIDGE 6OL11-37
STEEL TRUSS (II).
IS7

Project Code	Rubric	Initiator	Lot	Ref	Number	Revision
93M	0407	AAC	60L11	DWG	90301	A

-Drawing shall be updated according to the comments on the GA drawing.
-Approval is subjected to the approval of coordination package between multi-discipline.

REVIEWED WITH COMMENT
MONORAILS PROJECT

All holes are 22mm U.N.O Length & Area & Weight per piece

Mark	Profile	Grade	QTY	Length	Area	Weight
IS8	FLT25*400	S355J2N	8	230.0	0.17	14.3

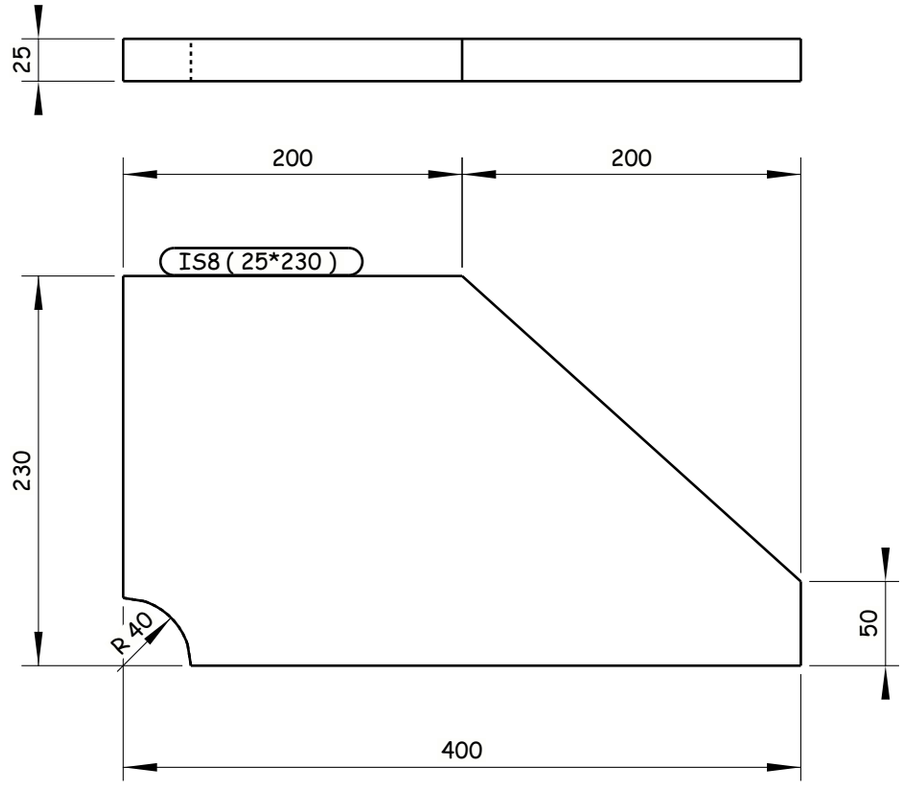

8 REQUIRED AS DRAWN E.SH IS8

Tekla structures

GENERAL NOTES:

1. ALL DIMENSIONS ARE IN MILLIMETERS UNLESS OTHERWISE SPECIFIED.
2. LEVELS ARE IN METERS
3. DESIGN SERVICE LIFE OF 100 YEARS.
4. FLANGES OF TOP AND BOTTOM CHORDS TO BE SUPPLIED WITH IMPROVED THROUGH THICKNESS PROPERTIES Z25 ACCORDING TO EN10164.

REFERENCE DRAWINGS

1	93M-0407-SEN-6OL11-END-10118-B PAGE 01:17
2	
3	
4	
5	
6	
7	
8	
9	
10	
11	

6TH OF OCTOBER CITY RAIL TRANSIT MONORAIL &
NEW CAPITAL CITY RAIL TRANSIT MONORAIL

The Authority
Hill International
Authority Consultant

Main Contractor

Designer

CONTRACTOR & CONSULTANT:
ENGINEERING HOUSE FOR CONSULTANCY

SCALE: AS SHOWN | CHK'D DRAWING | DATE: 20.11.2024

REV	DATE	BY	DESCRIPTION	CHK	APD
A	20-11-24	E.SH	ISSUE FOR APPROVAL	A.SH	M.M

6 October Monorail
Engineering Unit
Valid For Construction

DRAWING TITLE:
6TH OF OCTOBER MONORAIL
SHOP DRAWING FOR BRIDGE 6OL11-37
STEEL TRUSS (II).
IS8

Project Code	Rubric	Initiator	Lot	Ref	Number	Revision
93M	0407	AAC	60L11	DWG	90302	A

-Drawing shall be updated according to the comments on the GA drawing.
-Approval is subjected to the approval of coordination package between multi-discipline.

REVIEWED WITH COMMENT
MONORAILS PROJECT

All holes are 22mm U.N.O Length & Area & Weight per piece

Mark	Profile	Grade	QTY	Length	Area	Weight
IS9	FLT25*180	S355J2N	16	250.0	0.08	6.1

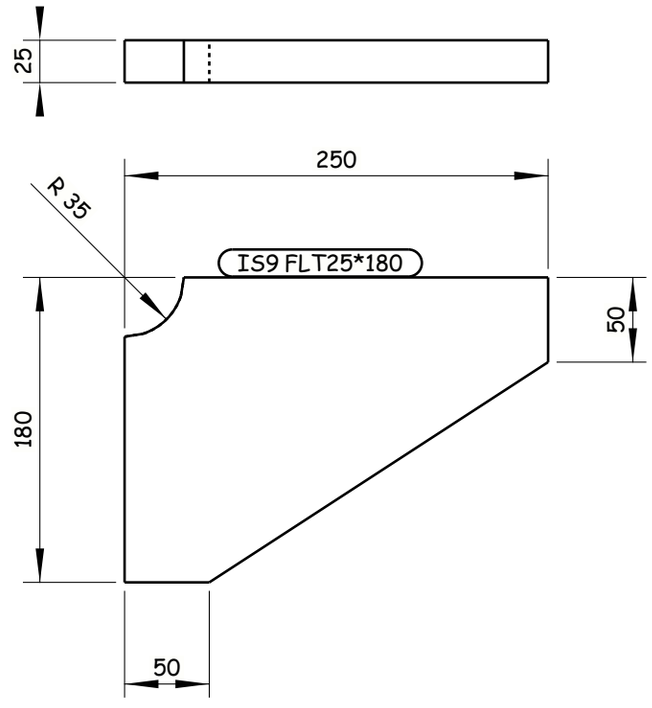

16 REQUIRED AS DRAWN E.SH IS9

Tekla structures

GENERAL NOTES:

1. ALL DIMENSIONS ARE IN MILLIMETERS UNLESS OTHERWISE SPECIFIED.
2. LEVELS ARE IN METERS
3. DESIGN SERVICE LIFE OF 100 YEARS.
4. FLANGES OF TOP AND BOTTOM CHORDS TO BE SUPPLIED WITH IMPROVED THROUGH THICKNESS PROPERTIES Z25 ACCORDING TO EN10164.

REFERENCE DRAWINGS

1	93M-0407-SEN-6OL11-END-10118-B PAGE 01:17
2	
3	
4	
5	
6	
7	
8	
9	
10	
11	

6TH OF OCTOBER CITY RAIL TRANSIT MONORAIL &
NEW CAPITAL CITY RAIL TRANSIT MONORAIL

The Authority — Hill International Authority Consultant | Main Contractor | Designer

CONTRACTOR / CONSULTANT: ENGINEERING HOUSE FOR CONSULTANCY

6 October Monorail Engineering Unit
Valid For Construction

SCALE: AS SHOWN | SHOP DRAWING | DATE: 20.11.2024

DRAWING TITLE:
6TH OF OCTOBER MONORAIL
SHOP DRAWING FOR BRIDGE 6OL11-37
STEEL TRUSS (II).
IS9

REV	DATE	BY	DESCRIPTION	CHK	APD
A	20-11-24	E.SH	ISSUE FOR APPROVAL	A.SH	M.M

Project Code	Rubric	Initiator	Lot	Ref	Number	Revision
9 3 M	0 4 0 7	A A C	6 0 L 1 1	D W G	90303	A

-Drawing shall be updated according to the comments on the GA drawing.
-Approval is subjected to the approval of coordination package between multi-discipline.

REVIEWED WITH COMMENT
MONORAILS PROJECT

All holes are 22mm U.N.O Length & Area & Weight per piece

Mark	Profile	Grade	QTY	Length	Area	Weight
IS10	PL25*185	S355J2N	12	2146.0	0.90	77.4

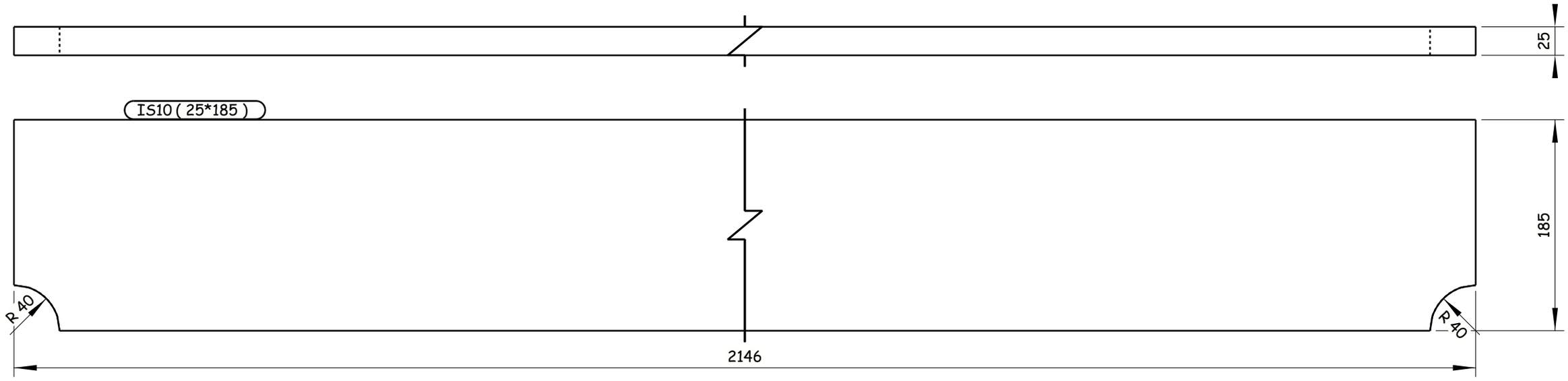

12 REQUIRED AS DRAWN E.SH IS10

GENERAL NOTES:

1. ALL DIMENSIONS ARE IN MILLIMETERS UNLESS OTHERWISE SPECIFIED.
2. LEVELS ARE IN METERS
3. DESIGN SERVICE LIFE OF 100 YEARS.
4. FLANGES OF TOP AND BOTTOM CHORDS TO BE SUPPLIED WITH IMPROVED THROUGH THICKNESS PROPERTIES Z25 ACCORDING TO EN10164.

REFERENCE DRAWINGS

1	93M-0407-SEN-6OL11-END-10118-B PAGE 01:17
2	
3	
4	
5	
6	
7	
8	
9	
10	
11	

6TH OF OCTOBER CITY RAIL TRANSIT MONORAIL &
NEW CAPITAL CITY RAIL TRANSIT MONORAIL

The Authority
Hill International
Authority Consultant

Main Contractor

Designer

CONTRACTOR & CONSULTANT:
ENGINEERING HOUSE FOR CONSULTANCY

SCALE: AS SHOWN | CHK'D DRAWING | DATE: 20.11.2024

REV	DATE	BY	DESCRIPTION	CHK	APD
A	20-11-24	E.SH	ISSUE FOR APPROVAL	A.SH	M.M

6 October Monorail
Engineering Unit
Valid For Construction

DRAWING TITLE:
6TH OF OCTOBER MONORAIL
SHOP DRAWING FOR BRIDGE 6OL11-37
STEEL TRUSS (II).
IS10

Project Code	Rubric	Initiator	Lot	Ref	Number	Revision
93M	407	AAC	60L11	DWG	90304	A

Tekla structures

-Drawing shall be updated according to the comments on the GA drawing.
-Approval is subjected to the approval of coordination package between multi-discipline.

REVIEWED WITH COMMENT
MONORAILS PROJECT

All holes are 22mm U.N.O Length & Area & Weight per piece

Mark	Profile	Grade	QTY	Length	Area	Weight
IS11	FLT25*180	S355J2N	16	600.0	0.25	20.8

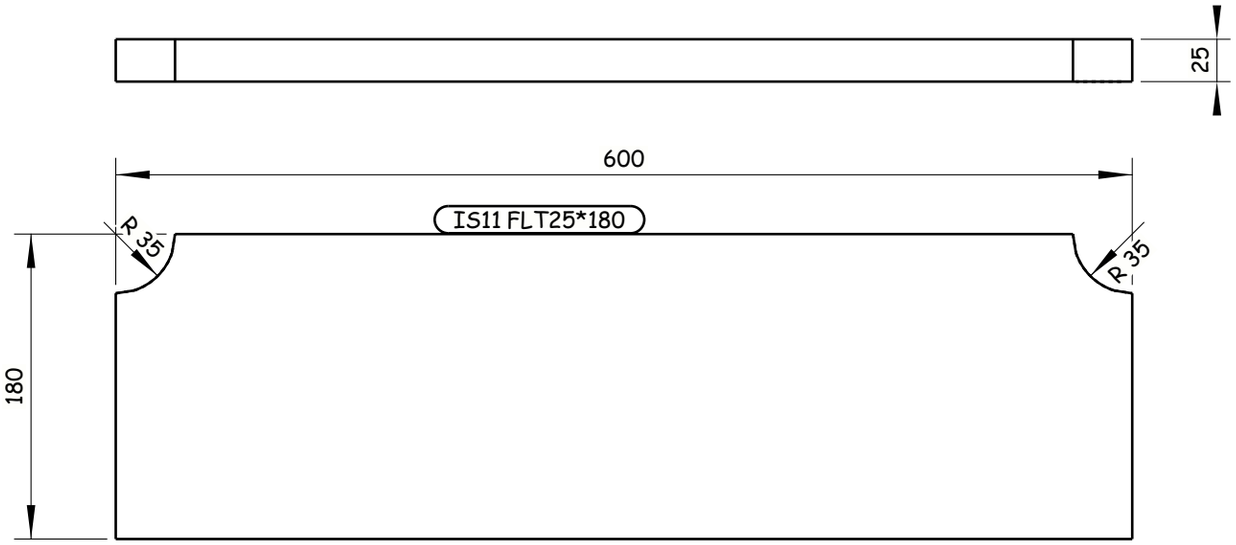

16 REQUIRED AS DRAWN E.SH IS11

Tekla structures

GENERAL NOTES:

1. ALL DIMENSIONS ARE IN MILLIMETERS UNLESS OTHERWISE SPECIFIED.
2. LEVELS ARE IN METERS
3. DESIGN SERVICE LIFE OF 100 YEARS.
4. FLANGES OF TOP AND BOTTOM CHORDS TO BE SUPPLIED WITH IMPROVED THROUGH THICKNESS PROPERTIES Z25 ACCORDING TO EN10164.

REFERENCE DRAWINGS

1	93M-0407-SEN-6OL11-END-10118-B PAGE 01:17
2	
3	
4	
5	
6	
7	
8	
9	
10	
11	

6TH OF OCTOBER CITY RAIL TRANSIT MONORAIL &
NEW CAPITAL CITY RAIL TRANSIT MONORAIL

The Authority
Hill International
Authority Consultant

Main Contractor

Designer

CONTRACTOR & CONSULTANT:
ENGINEERING HOUSE FOR CONSULTANCY

SCALE: AS SHOWN | CHK'D DRAWING | DATE: 20.11.2024

REV	DATE	BY	DESCRIPTION	CHK	APD
A	20-11-24	E.SH	ISSUE FOR APPROVAL	A.SH	M.M

6 October Monorail
Engineering Unit
Valid For Construction

DRAWING TITLE:
6TH OF OCTOBER MONORAIL
SHOP DRAWING FOR BRIDGE 6OL11-37
STEEL TRUSS (II).
IS11

Project Code	Rubric	Initiator	Lot	Ref	Number	Revision
93M	0407	AAC	60L11	DWG	90305	A

-Drawing shall be updated according to the comments on the GA drawing.
-Approval is subjected to the approval of coordination package between multi-discipline.

REVIEWED WITH COMMENT
MONORAILS PROJECT

All holes are 22mm U.N.O Length & Area & Weight per piece

Mark	Profile	Grade	QTY	Length	Area	Weight
L1	1/2IPE330	S355J0N	9	6557.1	3.80	138.5

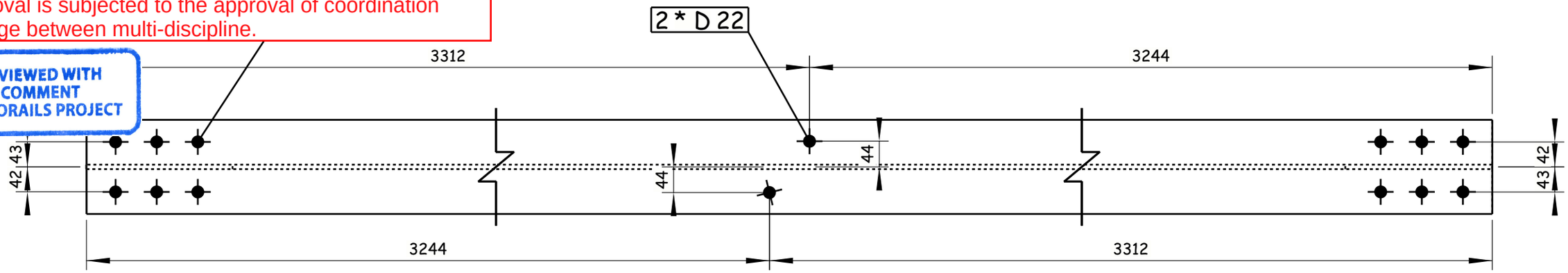

9 REQUIRED AS DRAWN E.SH L1

GENERAL NOTES:

1. ALL DIMENSIONS ARE IN MILLIMETERS UNLESS OTHERWISE SPECIFIED.
2. LEVELS ARE IN METERS
3. DESIGN SERVICE LIFE OF 100 YEARS.
4. FLANGES OF TOP AND BOTTOM CHORDS TO BE SUPPLIED WITH IMPROVED THROUGH THICKNESS PROPERTIES Z25 ACCORDING TO EN10164.

REFERENCE DRAWINGS

1	93M-0407-SEN-6OL11-END-10118-B PAGE 01:17
2	
3	
4	
5	
6	
7	
8	
9	
10	
11	

6TH OF OCTOBER CITY RAIL TRANSIT MONORAIL &
NEW CAPITAL CITY RAIL TRANSIT MONORAIL

The Authority — Hill International — Authority Consultant
ORASCOM CONSTRUCTION — BOMBARDIER — Main Contractor
SENER — SHAKER CONSULTANCY GROUP — Designer

CONTRACTOR & CONSULTANT: EHC ENGINEERING HOUSE FOR CONSULTANCY

SCALE: AS SHOWN | CHK'D DRAWING | DATE: 20.11.2024

REV	DATE	BY	DESCRIPTION	CHK	APD
A	20-11-24	E.SH	ISSUE FOR APPROVAL	A.SH	M.M

6 October: Monorail
Engineering Unit
Valid For Construction

DRAWING TITLE:
6TH OF OCTOBER MONORAIL
SHOP DRAWING FOR BRIDGE 6OL11-37
STEEL TRUSS (II).
L1

Project Code	Rubric	Initiator	Lot	Ref	Number	Revision
9 3 M	0 4 0 7	A A C	6 0 L 1 1	D W G	90306	A

Tekla structures

-Drawing shall be updated according to the comments on the GA drawing.
-Approval is subjected to the approval of coordination package between multi-discipline.

All holes are 22mm U.N.O Length & Area & Weight per piece						
L2	1/2IPE330	S355J0N	9	6556.8	3.80	138.5
Mark	Profile	Grade	QTY	Length	Area	Weight

REVIEWED WITH COMMENT
MONORAILS PROJECT

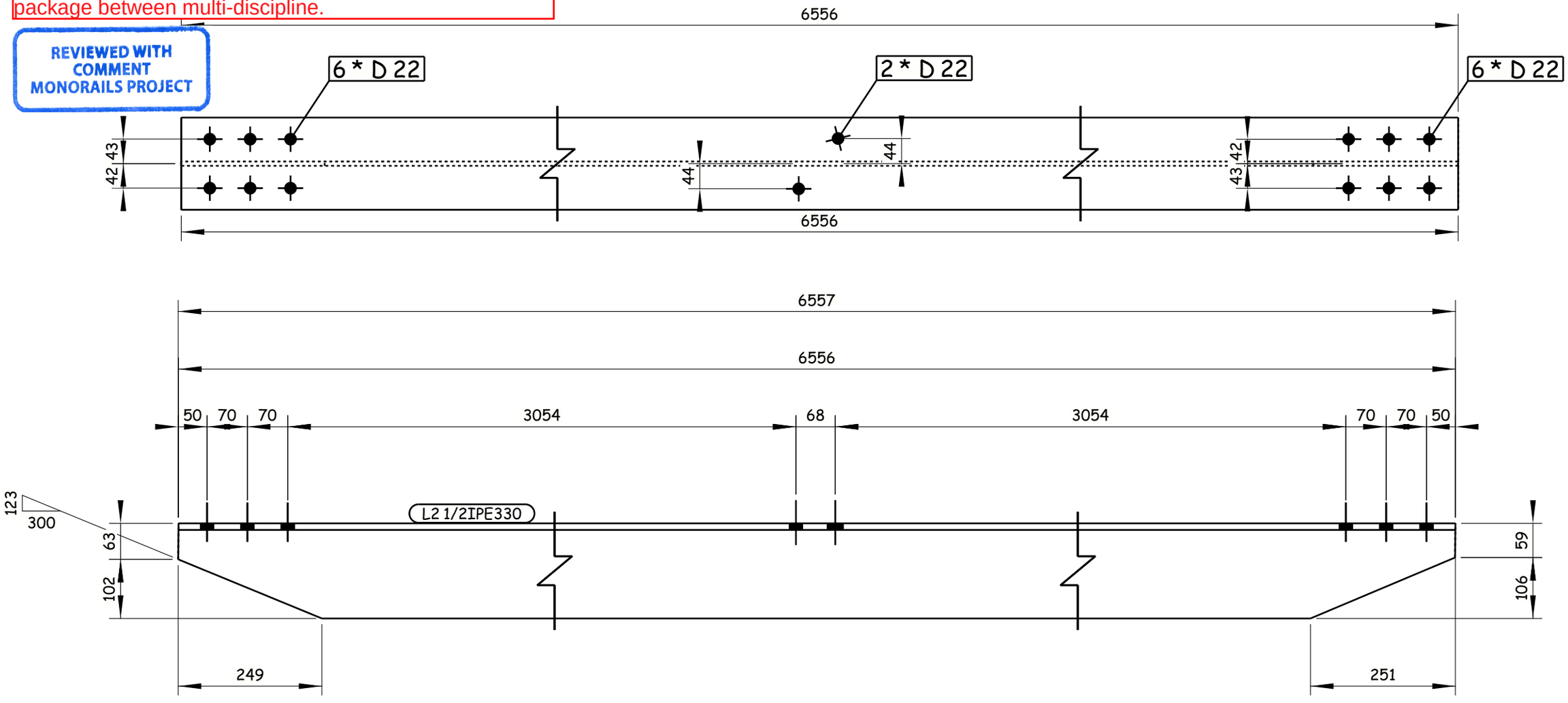

9 REQUIRED AS DRAWN E.SH L2

GENERAL NOTES:

1. ALL DIMENSIONS ARE IN MILLIMETERS UNLESS OTHERWISE SPECIFIED.
2. LEVELS ARE IN METERS
3. DESIGN SERVICE LIFE OF 100 YEARS.
4. FLANGES OF TOP AND BOTTOM CHORDS TO BE SUPPLIED WITH IMPROVED THROUGH THICKNESS PROPERTIES Z25 ACCORDING TO EN10164.

REFERENCE DRAWINGS

1	93M-0407-SEN-6OL11-END-10118-B PAGE 01:17
2	
3	
4	
5	
6	
7	
8	
9	
10	
11	

6TH OF OCTOBER CITY RAIL TRANSIT MONORAIL &
NEW CAPITAL CITY RAIL TRANSIT MONORAIL

The Authority — Hill International — Authority Consultant
Main Contractor: ORASCOM CONSTRUCTION
BOMBARDIER
Designer: SENER / SHAKER CONSULTANCY GROUP

CONTRACTOR & CONSULTANT: ENGINEERING HOUSE FOR CONSULTANCY

SCALE: AS SHOWN | CHK'D DRAWING | DATE: 20.11.2024

REV	DATE	BY	DESCRIPTION	CHK	APD
A	20-11-24	E.SH	ISSUE FOR APPROVAL	A.SH	M.M

6 October: Monorail Engineering Unit
Valid For Construction

DRAWING TITLE:
6TH OF OCTOBER MONORAIL
SHOP DRAWING FOR BRIDGE 6OL11-37
STEEL TRUSS (II).
L2

Project Code	Rubric	Initiator	Lot	Ref	Number	Revision
93M	0407	AAC	60L11	DWG	90307	A

Tekla structures

-Drawing shall be updated according to the comments on the GA drawing.
-Approval is subjected to the approval of coordination package between multi-discipline.

All holes are 22mm U.N.O Length & Area & Weight per piece						
L3	1/2IPE330	S355J0N	2	6602.1	3.83	139.4
Mark	Profile	Grade	QTY	Length	Area	Weight

REVIEWED WITH COMMENT
MONORAILS PROJECT

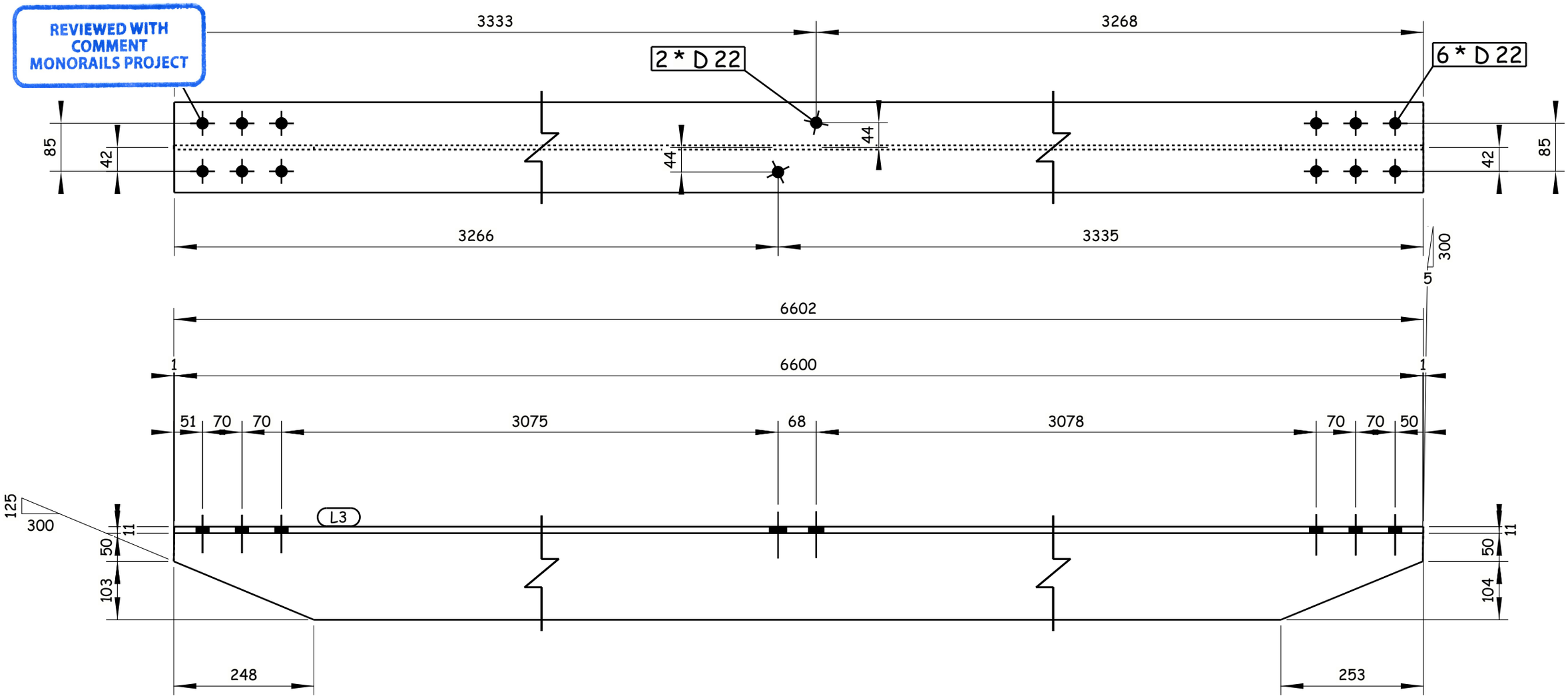

2 REQUIRED AS DRAWN E.SH L3

GENERAL NOTES:

1. ALL DIMENSIONS ARE IN MILLIMETERS UNLESS OTHERWISE SPECIFIED.
2. LEVELS ARE IN METERS
3. DESIGN SERVICE LIFE OF 100 YEARS.
4. FLANGES OF TOP AND BOTTOM CHORDS TO BE SUPPLIED WITH IMPROVED THROUGH THICKNESS PROPERTIES Z25 ACCORDING TO EN10164.

REFERENCE DRAWINGS

1	93M-0407-SEN-6OL11-END-10118-B PAGE 01:17
2	
3	
4	
5	
6	
7	
8	
9	
10	
11	

6TH OF OCTOBER CITY RAIL TRANSIT MONORAIL &
NEW CAPITAL CITY RAIL TRANSIT MONORAIL

The Authority
Hill International
Authority Consultant

ORASCOM CONSTRUCTION
BOMBARDIER
Main Contractor

SENER
SHAKER CONSULTANCY GROUP
Designer

CONTRACTOR / CONSULTANT :
ENGINEERING HOUSE FOR CONSULTANCY

6 October Monorail
Engineering Unit
Valid For Construction

REV	DATE	BY	DESCRIPTION	CHK	APD
A	20-11-24	E.SH	ISSUE FOR APPROVAL	A.SH	M.M

SCALE: AS SHOWN | CHD DRAWING | DATE: 20.11.2024

DRAWING TITLE:
6TH OF OCTOBER MONORAIL
SHOP DRAWING FOR BRIDGE 6OL11-37
STEEL TRUSS (II).
L3

Project Code	Rubric	Initiator	Lot	Ref	Number	Revision
93M	04 07	AAC	60 L11	DWG	90308	A

Tekla structures

-Drawing shall be updated according to the comments on the GA drawing.
-Approval is subjected to the approval of coordination package between multi-discipline.

All holes are 22mm U.N.O Length & Area & Weight per piece						
L4	1/2IPE330	S355J0N	2	6597.6	3.83	139.3
Mark	Profile	Grade	QTY	Length	Area	Weight

REVIEWED WITH COMMENT
MONORAILS PROJECT

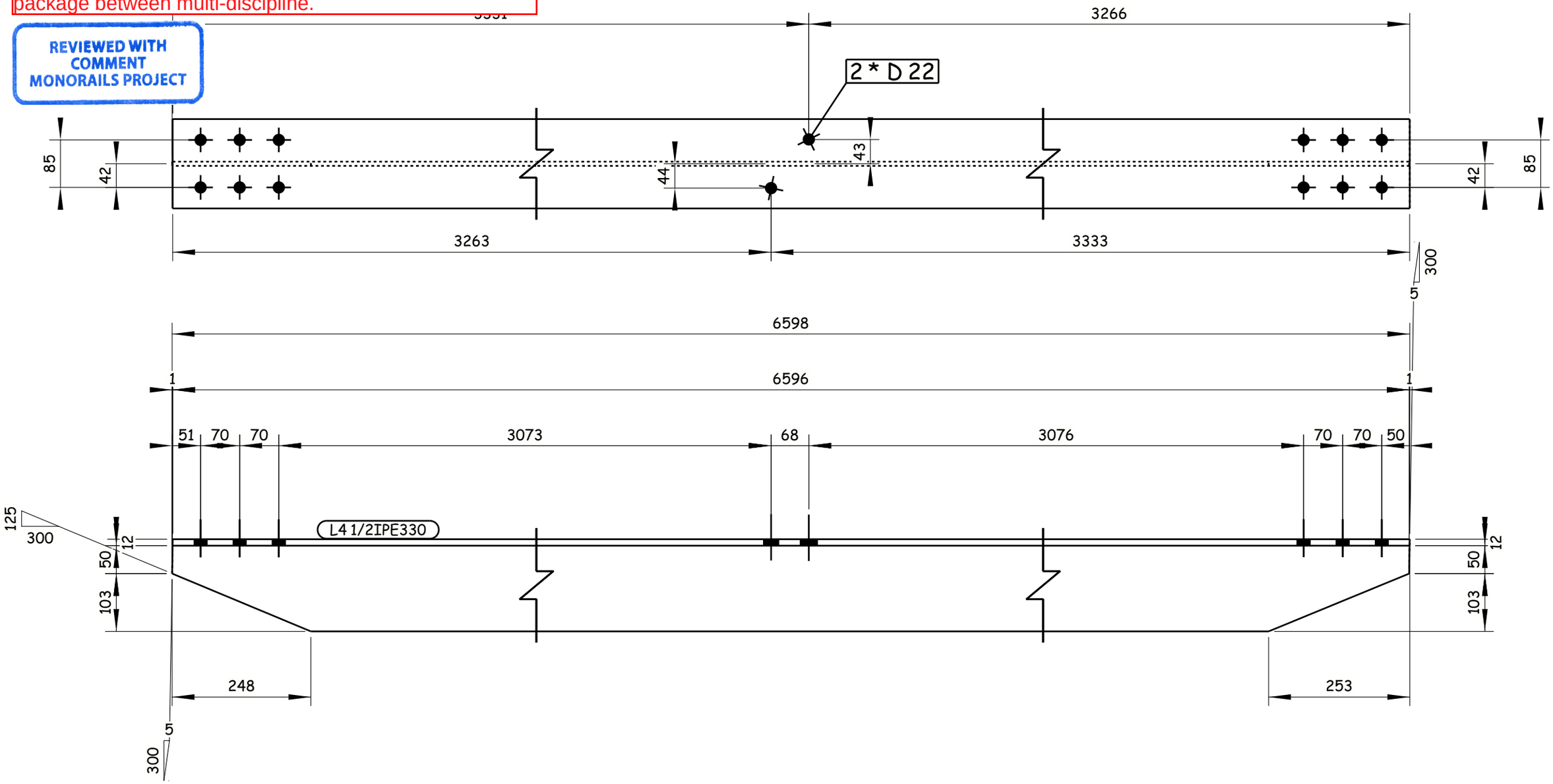

2 REQUIRED AS DRAWN E.SH L4

GENERAL NOTES:

1. ALL DIMENSIONS ARE IN MILLIMETERS UNLESS OTHERWISE SPECIFIED.
2. LEVELS ARE IN METERS
3. DESIGN SERVICE LIFE OF 100 YEARS.
4. FLANGES OF TOP AND BOTTOM CHORDS TO BE SUPPLIED WITH IMPROVED THROUGH THICKNESS PROPERTIES Z25 ACCORDING TO EN10164.

REFERENCE DRAWINGS

1	93M-0407-SEN-6OL11-END-10118-B PAGE 01:17
2	
3	
4	
5	
6	
7	
8	
9	
10	
11	

6TH OF OCTOBER CITY RAIL TRANSIT MONORAIL &
NEW CAPITAL CITY RAIL TRANSIT MONORAIL

The Authority — Hill International — Authority Consultant
ORASCOM CONSTRUCTION — Main Contractor
BOMBARDIER
SENER — SHAKER CONSULTANCY GROUP — Designer

CONTRACTOR / CONSULTANT :
ENGINEERING HOUSE FOR CONSULTANCY

6 October Monorail
Engineering Unit
Valid For Construction

SCALE	CHD DRAWING	DATE
AS SHOWN		20.11.2024

REV	DATE	BY	DESCRIPTION	CHK	APD
A	20-11-24	E.SH	ISSUE FOR APPROVAL	A.SH	M.M

DRAWING TITLE:
6TH OF OCTOBER MONORAIL
SHOP DRAWING FOR BRIDGE 6OL11-37
STEEL TRUSS (II).
L4

Project Code	Rubric	Initiator	Lot	Ref	Number	Revision
93M	04	07	AAC60L11	DWG	90309	A

Tekla structures

-Drawing shall be updated according to the comments on the GA drawing.
-Approval is subjected to the approval of coordination package between multi-discipline.

REVIEWED WITH COMMENT
MONORAILS PROJECT

All holes are 22mm U.N.O Length & Area & Weight per piece

Mark	Profile	Grade	QTY	Length	Area	Weight
LP1	PL35*710	S355J2N	8	1710.0	2.60	333.6

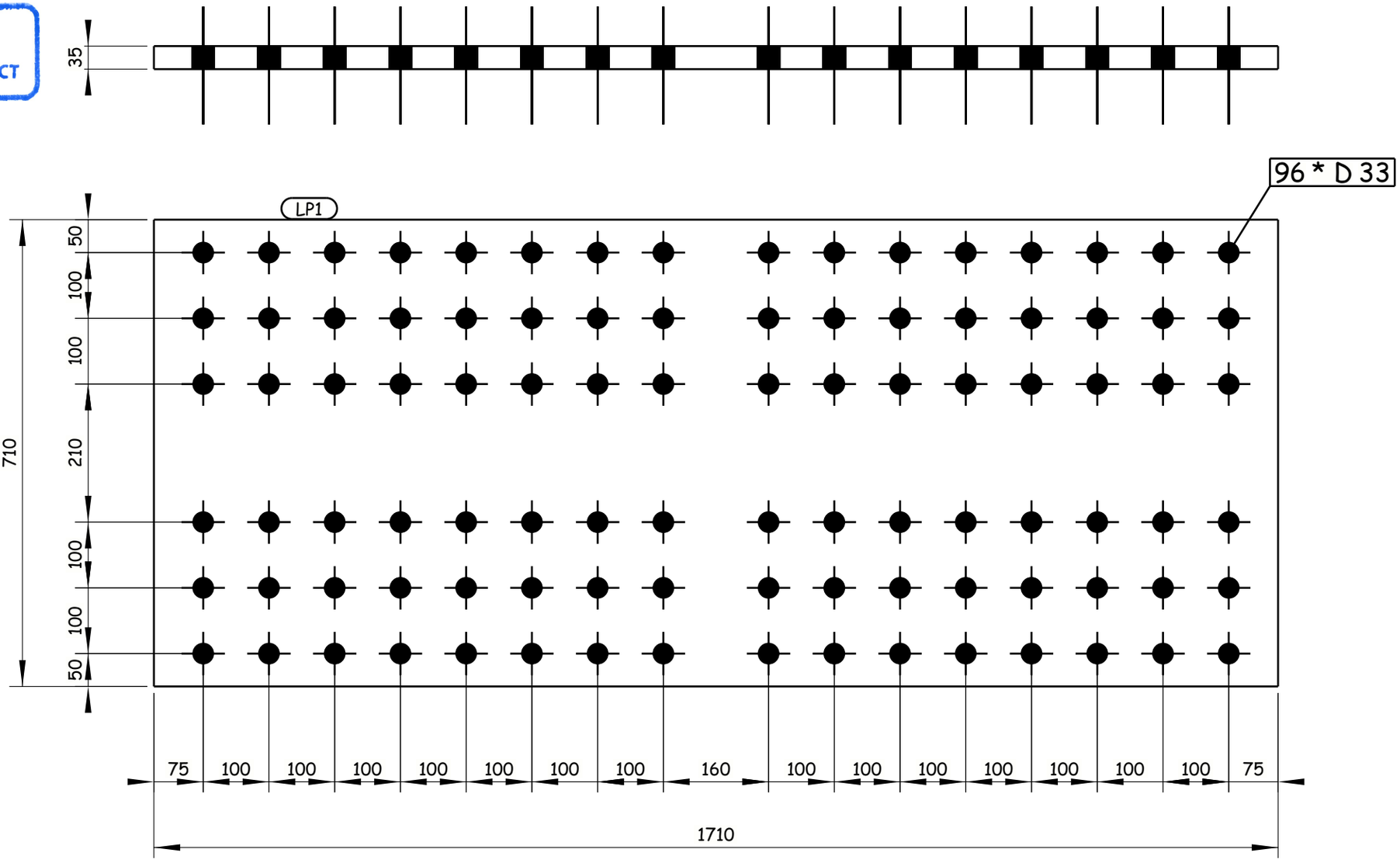

8 REQUIRED AS DRAWN E.SH LP1

GENERAL NOTES:

1. ALL DIMENSIONS ARE IN MILLIMETERS UNLESS OTHERWISE SPECIFIED.
2. LEVELS ARE IN METERS
3. DESIGN SERVICE LIFE OF 100 YEARS.
4. FLANGES OF TOP AND BOTTOM CHORDS TO BE SUPPLIED WITH IMPROVED THROUGH THICKNESS PROPERTIES Z25 ACCORDING TO EN10164.

REFERENCE DRAWINGS

1	93M-0407-SEN-6OL11-END-10118-B PAGE 01:17
2	
3	
4	
5	
6	
7	
8	
9	
10	
11	

6TH OF OCTOBER CITY RAIL TRANSIT MONORAIL &
NEW CAPITAL CITY RAIL TRANSIT MONORAIL

The Authority
Hill International
Authority Consultant

Main Contractor

Designer

CONTRACTOR / CONSULTANT:
ENGINEERING HOUSE FOR CONSULTANCY

6 October Monorail
Engineering Unit
Valid For Construction

SCALE	CHD DRAWING	DATE
AS SHOWN		20.11.2024

REV	DATE	BY	DESCRIPTION	CHK	APD
A	20-11-24	E.SH	ISSUE FOR APPROVAL	A.SH	M.M

DRAWING TITLE:
6TH OF OCTOBER MONORAIL
SHOP DRAWING FOR BRIDGE 6OL11-37
STEEL TRUSS (II).
LP1

Project Code	Rubric	Initiator	Lot	Ref	Number	Revision
93M	0407	AAC	60L11	DWG	90310	A

Tekla structures

-Drawing shall be updated according to the comments on the GA drawing.
-Approval is subjected to the approval of coordination package between multi-discipline.

REVIEWED WITH COMMENT
MONORAILS PROJECT

All holes are 22mm U.N.O Length & Area & Weight per piece

Mark	Profile	Grade	QTY	Length	Area	Weight
LP2	FLT35*300	S355J2N	16	1710.0	1.17	140.9

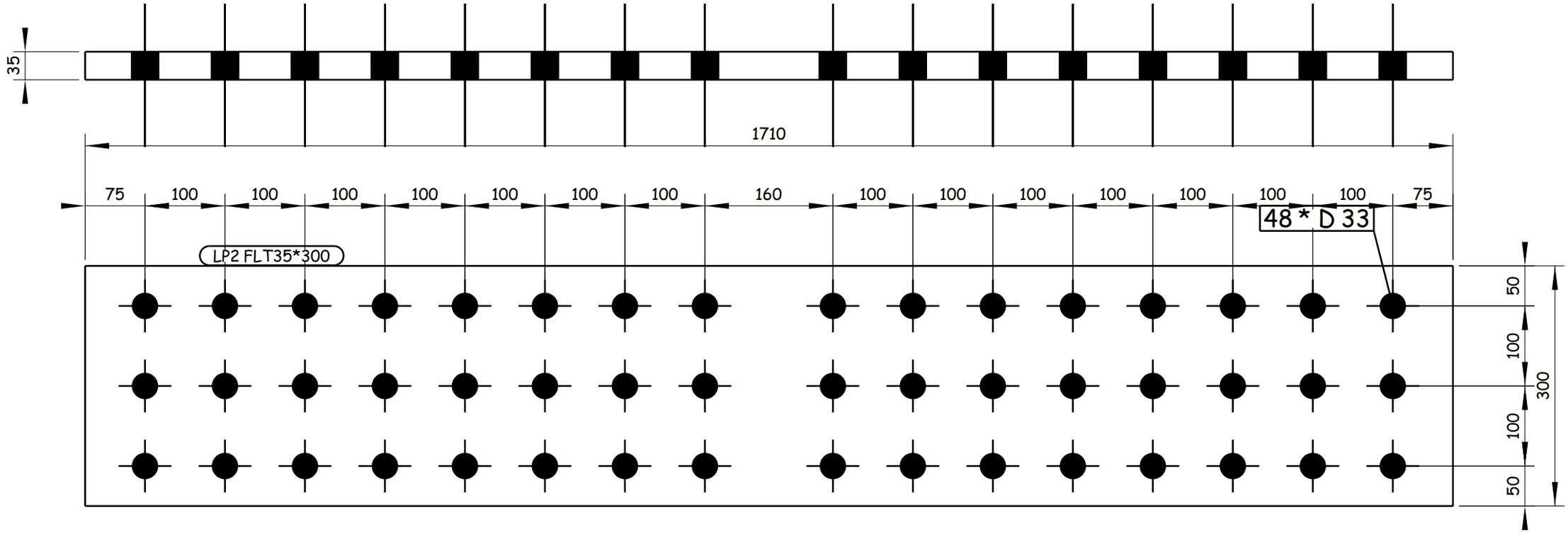

16 REQUIRED AS DRAWN E.SH LP2

GENERAL NOTES:

1. ALL DIMENSIONS ARE IN MILLIMETERS UNLESS OTHERWISE SPECIFIED.
2. LEVELS ARE IN METERS
3. DESIGN SERVICE LIFE OF 100 YEARS.
4. FLANGES OF TOP AND BOTTOM CHORDS TO BE SUPPLIED WITH IMPROVED THROUGH THICKNESS PROPERTIES Z25 ACCORDING TO EN10164.

REFERENCE DRAWINGS

1	93M-0407-SEN-6OL11-END-10118-B PAGE 01:17
2	
3	
4	
5	
6	
7	
8	
9	
10	
11	

6TH OF OCTOBER CITY RAIL TRANSIT MONORAIL &
NEW CAPITAL CITY RAIL TRANSIT MONORAIL

The Authority
Hill International
Authority Consultant

ORASCOM CONSTRUCTION
Main Contractor

BOMBARDIER
SENER
SHAKER CONSULTANCY GROUP
Designer

CONTRACTOR / CONSULTANT :
ENGINEERING HOUSE FOR CONSULTANCY

6 October Monorail
Engineering Unit
Valid For Construction

SCALE	SHOP DRAWING	DATE
AS SHOWN		20.11.2024

REV	DATE	BY	DESCRIPTION	CHK	APD
A	20-11-24	E.SH	ISSUE FOR APPROVAL	A.SH	M.M

DRAWING TITLE:
6TH OF OCTOBER MONORAIL
SHOP DRAWING FOR BRIDGE 6OL11-37
STEEL TRUSS (II).
LP2

Project Code	Rubric	Initiator	Lot	Ref	Number	Revision
93M	04 07	AAC	60 L11	DWG	90311	A

Tekla structures

-Drawing shall be updated according to the comments on the GA drawing.
-Approval is subjected to the approval of coordination package between multi-discipline.

REVIEWED WITH COMMENT
MONORAILS PROJECT

All holes are 22mm U.N.O Length & Area & Weight per piece

Mark	Profile	Grade	QTY	Length	Area	Weight
LP3	FLT20*350	S355J2N	4	1110.0	0.84	61.0

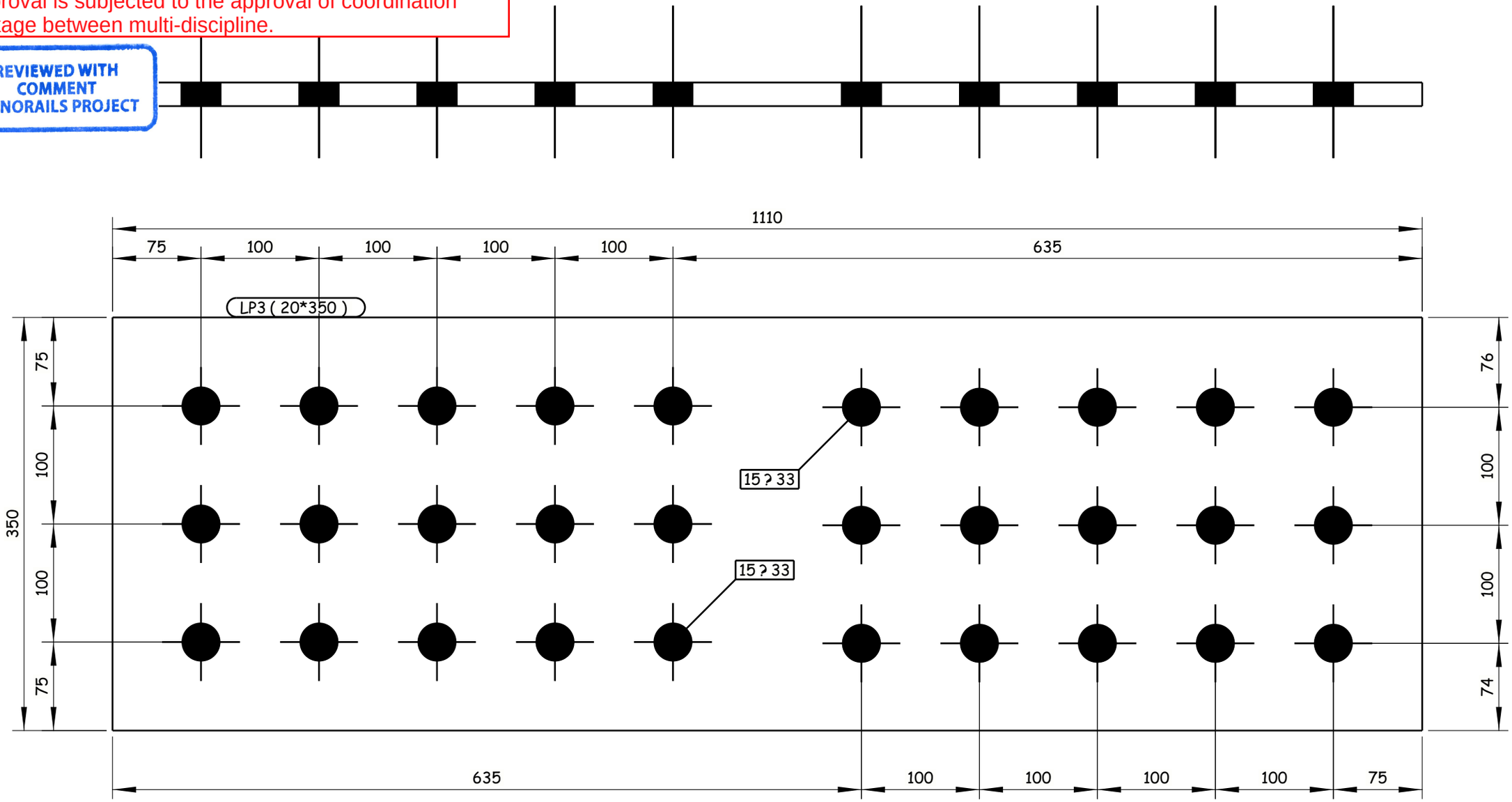

4 REQUIRED AS DRAWN E.SH LP3

6 October Monorail
Engineering Unit
Valid For Construction

GENERAL NOTES:

1. ALL DIMENSIONS ARE IN MILLIMETERS UNLESS OTHERWISE SPECIFIED.
2. LEVELS ARE IN METERS
3. DESIGN SERVICE LIFE OF 100 YEARS.
4. FLANGES OF TOP AND BOTTOM CHORDS TO BE SUPPLIED WITH IMPROVED THROUGH THICKNESS PROPERTIES Z25 ACCORDING TO EN10164.

REFERENCE DRAWINGS

1	93M-0407-SEN-6OL11-END-10118-B PAGE 01:17
2	
3	
4	
5	
6	
7	
8	
9	
10	
11	

6TH OF OCTOBER CITY RAIL TRANSIT MONORAIL &
NEW CAPITAL CITY RAIL TRANSIT MONORAIL

The Authority
Hill International
Authority Consultant

ORASCOM CONSTRUCTION
Main Contractor

BOMBARDIER
SENER
SHAKER CONSULTANCY GROUP
Designer

CONTRACTOR & CONSULTANT:
EHC
ENGINEERING HOUSE FOR CONSULTANCY

SCALE: AS SHOWN | SHD DRAWING | DATE: 20.11.2024

DRAWING TITLE:
6TH OF OCTOBER MONORAIL
SHOP DRAWING FOR BRIDGE 6OL11-37
STEEL TRUSS (II).
LP3

REV.	DATE	BY	DESCRIPTION	CHK	APD
A	20-11-24	E.SH	ISSUE FOR APPROVAL	A.SH	M.M

Project Code	Rubric	Initiator	Lot	Ref	Number	Revision
93M	0407	AAC	60L11	DWG	90312	A

Tekla structures

-Drawing shall be updated according to the comments on the GA drawing.
-Approval is subjected to the approval of coordination package between multi-discipline.

REVIEWED WITH COMMENT
MONORAILS PROJECT

All holes are 22mm U.N.O Length & Area & Weight per piece

Mark	Profile	Grade	QTY	Length	Area	Weight
LP4	PL20*600	S355J2N	8	1310.0	1.65	123.4

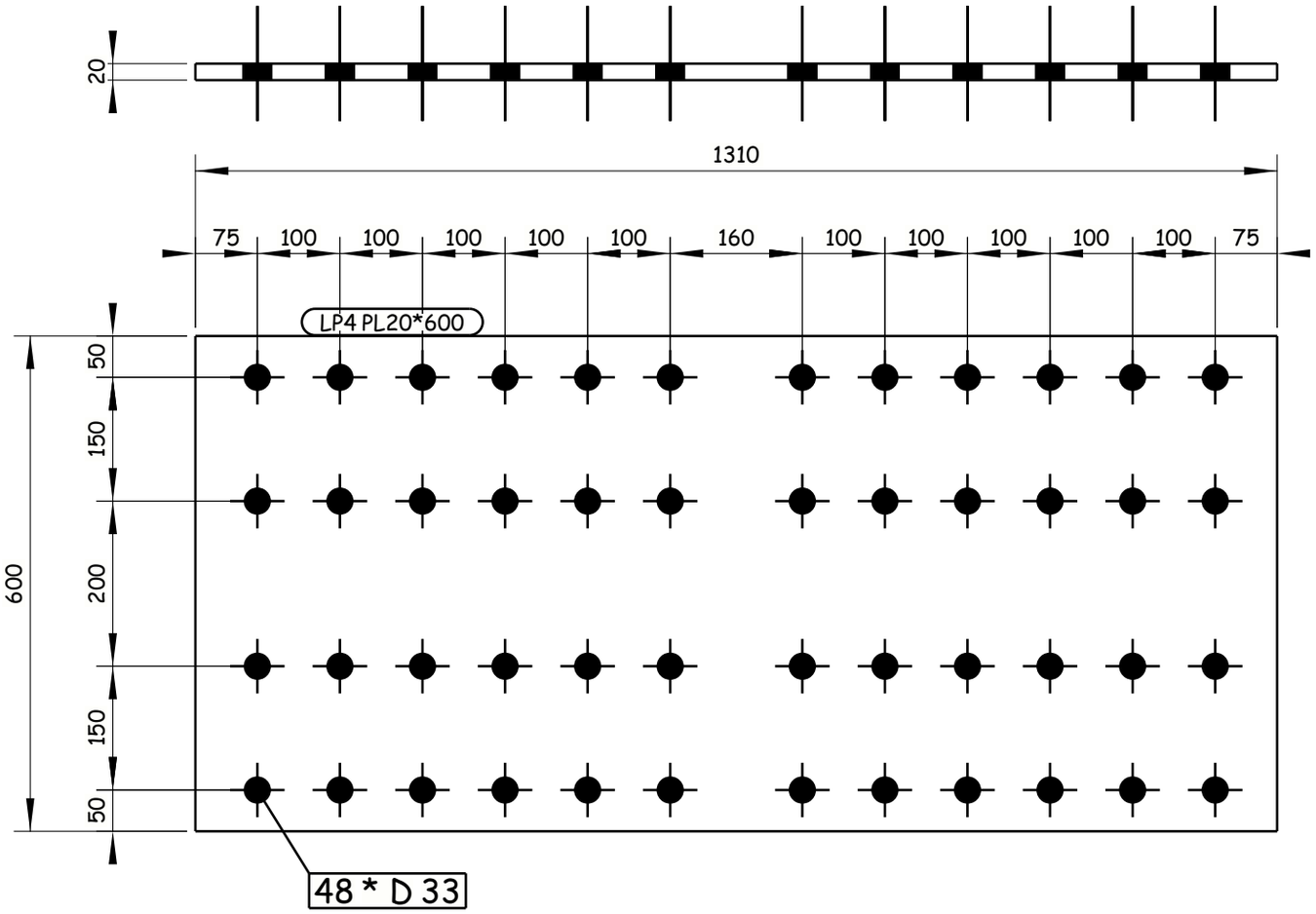

8 REQUIRED AS DRAWN E.SH LP4

GENERAL NOTES:

1. ALL DIMENSIONS ARE IN MILLIMETERS UNLESS OTHERWISE SPECIFIED.
2. LEVELS ARE IN METERS
3. DESIGN SERVICE LIFE OF 100 YEARS.
4. FLANGES OF TOP AND BOTTOM CHORDS TO BE SUPPLIED WITH IMPROVED THROUGH THICKNESS PROPERTIES Z25 ACCORDING TO EN10164.

REFERENCE DRAWINGS

1	93M-0407-SEN-6OL11-END-10118-B PAGE 01:17
2	
3	
4	
5	
6	
7	
8	
9	
10	
11	

6TH OF OCTOBER CITY RAIL TRANSIT MONORAIL &
NEW CAPITAL CITY RAIL TRANSIT MONORAIL

The Authority
Hill International
Authority Consultant

Main Contractor

Designer

CONTRACTOR/ CONSULTANT:

ENGINEERING HOUSE FOR CONSULTANCY

6 October Monorail
Engineering Unit
Valid For Construction

SCALE	SHOP DRAWING	DATE
AS SHOWN		20.11.2024

REV	DATE	BY	DESCRIPTION	CHK	APD
A	20-11-24	E.SH	ISSUE FOR APPROVAL	A.SH	M.M

DRAWING TITLE:
6TH OF OCTOBER MONORAIL
SHOP DRAWING FOR BRIDGE 6OL11-37
STEEL TRUSS (II).
LP4

Project Code	Rubric	Initiator	Lot	Ref	Number	Revision
93M	0407	AAC	60L11	DWG	90313	A

Tekla structures

-Drawing shall be updated according to the comments on the GA drawing.
-Approval is subjected to the approval of coordination package between multi-discipline.

REVIEWED WITH COMMENT
MONORAILS PROJECT

All holes are 22mm U.N.O Length & Area & Weight per piece

Mark	Profile	Grade	QTY	Length	Area	Weight
LP5	FLT20*250	S355J2N	16	1310.0	0.72	51.4

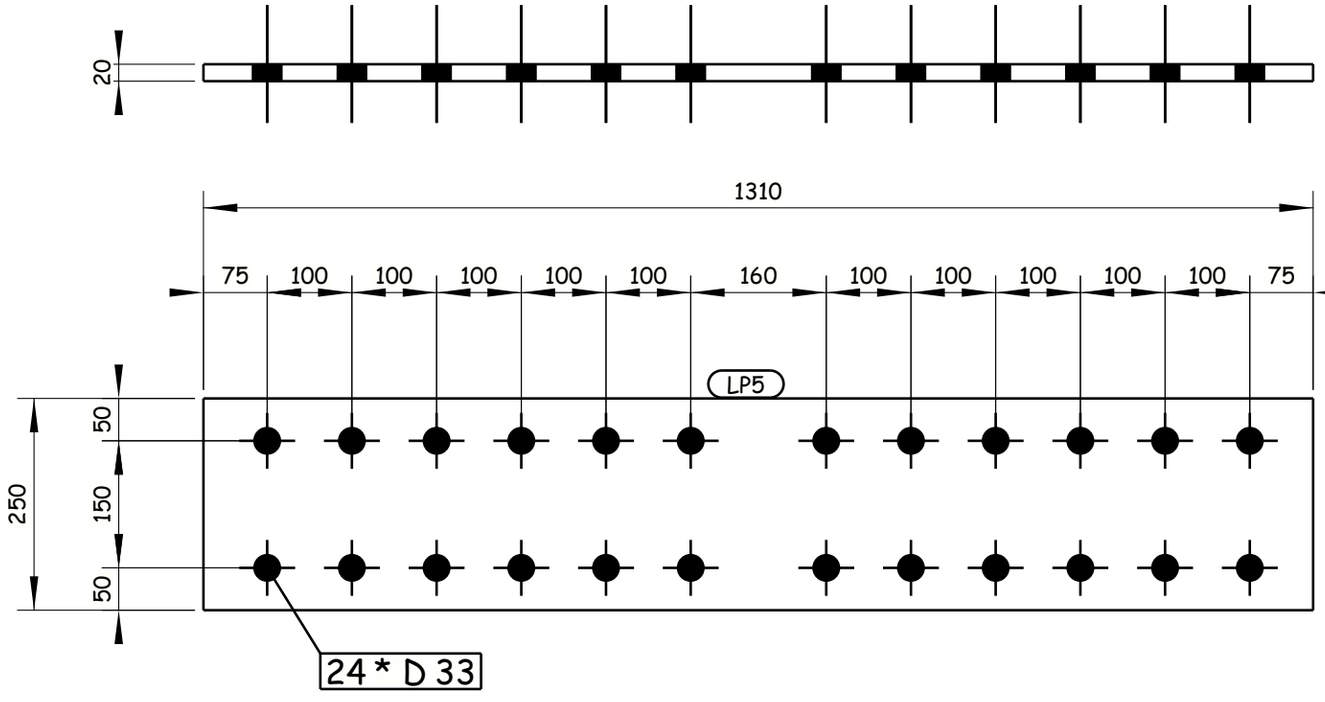

16 REQUIRED AS DRAWN E.SH LP5

GENERAL NOTES:

1. ALL DIMENSIONS ARE IN MILLIMETERS UNLESS OTHERWISE SPECIFIED.
2. LEVELS ARE IN METERS
3. DESIGN SERVICE LIFE OF 100 YEARS.
4. FLANGES OF TOP AND BOTTOM CHORDS TO BE SUPPLIED WITH IMPROVED THROUGH THICKNESS PROPERTIES Z25 ACCORDING TO EN10164.

REFERENCE DRAWINGS

1	93M-0407-SEN-6OL11-END-10118-B PAGE 01:17
2	
3	
4	
5	
6	
7	
8	
9	
10	
11	

6TH OF OCTOBER CITY RAIL TRANSIT MONORAIL &
NEW CAPITAL CITY RAIL TRANSIT MONORAIL

The Authority
Hill International
Authority Consultant

Main Contractor

Designer

CONTRACTOR & CONSULTANT:
ENGINEERING HOUSE FOR CONSULTANCY

SCALE: AS SHOWN | CHK'D DRAWING | DATE: 20.11.2024

REV	DATE	BY	DESCRIPTION	CHK	APD
A	20-11-24	E.SH	ISSUE FOR APPROVAL	A.SH	M.M

6 October Monorail
Engineering Unit
Valid For Construction

DRAWING TITLE:
6TH OF OCTOBER MONORAIL
SHOP DRAWING FOR BRIDGE 6OL11-37
STEEL TRUSS (II).
LP5

Project Code	Rubric	Initiator	Lot	Ref	Number	Revision
9 3 M	0 4 0 7	A A C	6 0 L 1 1	D W G	90314	A

Tekla structures

-Drawing shall be updated according to the comments on the GA drawing.
-Approval is subjected to the approval of coordination package between multi-discipline.

REVIEWED WITH COMMENT
MONORAILS PROJECT

All holes are 22mm U.N.O Length & Area & Weight per piece

Mark	Profile	Grade	QTY	Length	Area	Weight
LP6	FLT20*450	S355J2N	4	1110.0	1.06	78.4

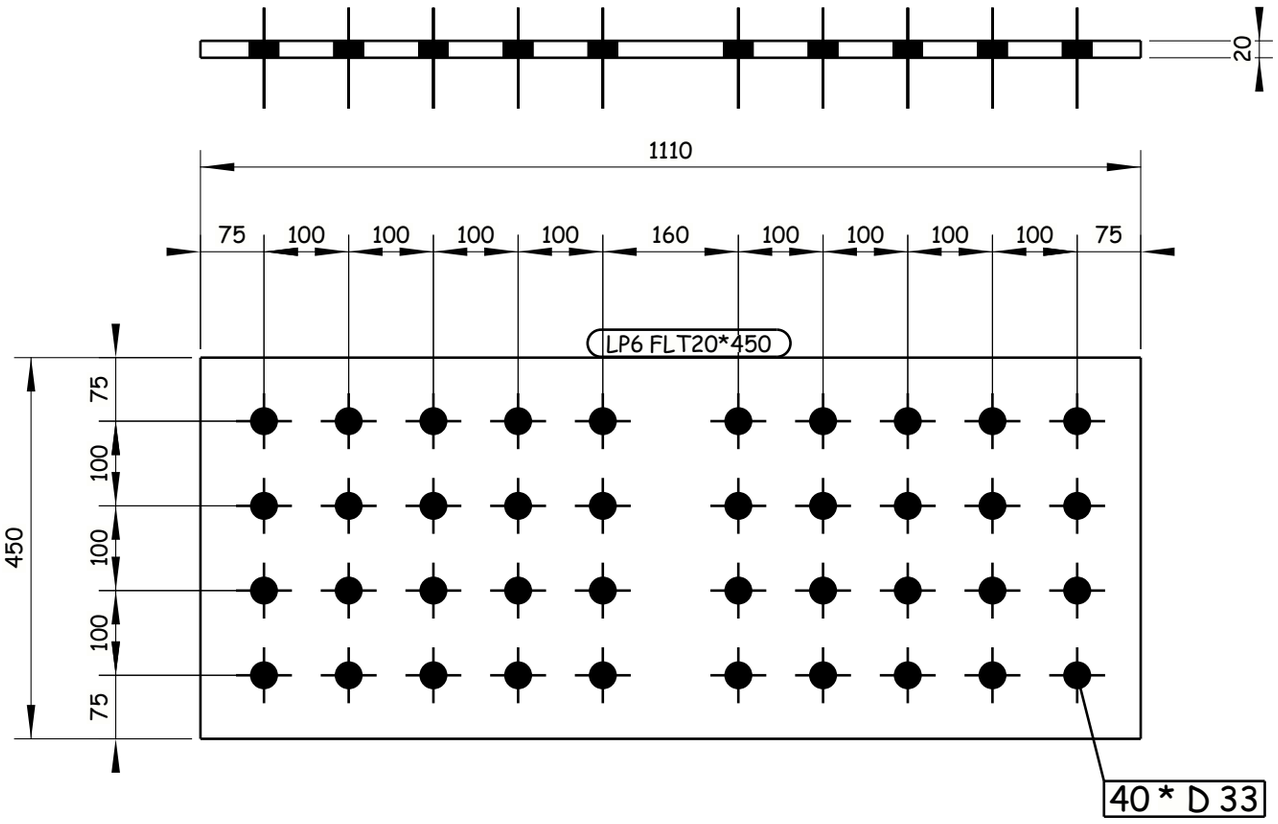

4 REQUIRED AS DRAWN E.SH LP6

GENERAL NOTES:

1. ALL DIMENSIONS ARE IN MILLIMETERS UNLESS OTHERWISE SPECIFIED.
2. LEVELS ARE IN METERS
3. DESIGN SERVICE LIFE OF 100 YEARS.
4. FLANGES OF TOP AND BOTTOM CHORDS TO BE SUPPLIED WITH IMPROVED THROUGH THICKNESS PROPERTIES Z25 ACCORDING TO EN10164.

REFERENCE DRAWINGS

1	93M-0407-SEN-6OL11-END-10118-B PAGE 01:17
2	
3	
4	
5	
6	
7	
8	
9	
10	
11	

6TH OF OCTOBER CITY RAIL TRANSIT MONORAIL &
NEW CAPITAL CITY RAIL TRANSIT MONORAIL

The Authority — Hill International Authority Consultant | ORASCOM CONSTRUCTION — BOMBARDIER — Main Contractor | SENER — SHAKER CONSULTANCY GROUP — Designer

CONTRACTOR & CONSULTANT: EHC ENGINEERING HOUSE FOR CONSULTANCY

6 October Monorail
Engineering Unit
Valid For Construction

SCALE	SHOP DRAWING	DATE
AS SHOWN		20.11.2024

REV	DATE	BY	DESCRIPTION	CHK	APD
A	20-11-24	E.SH	ISSUE FOR APPROVAL	A.SH	M.M

DRAWING TITLE:
6TH OF OCTOBER MONORAIL
SHOP DRAWING FOR BRIDGE 6OL11-37
STEEL TRUSS (II).
LP6

Project Code	Rubric	Initiator	Lot	Ref	Number	Revision
9 3 M	0 4 0 7	A A C	6 0 L 1 1	D W G	90315	A

Tekla structures

-Drawing shall be updated according to the comments on the GA drawing.
-Approval is subjected to the approval of coordination package between multi-discipline.

REVIEWED WITH COMMENT
MONORAILS PROJECT

All holes are 22mm U.N.O Length & Area & Weight per piece

Mark	Profile	Grade	QTY	Length	Area	Weight
LP7	FLT20*450	S355J2N	4	1110.0	1.06	78.4

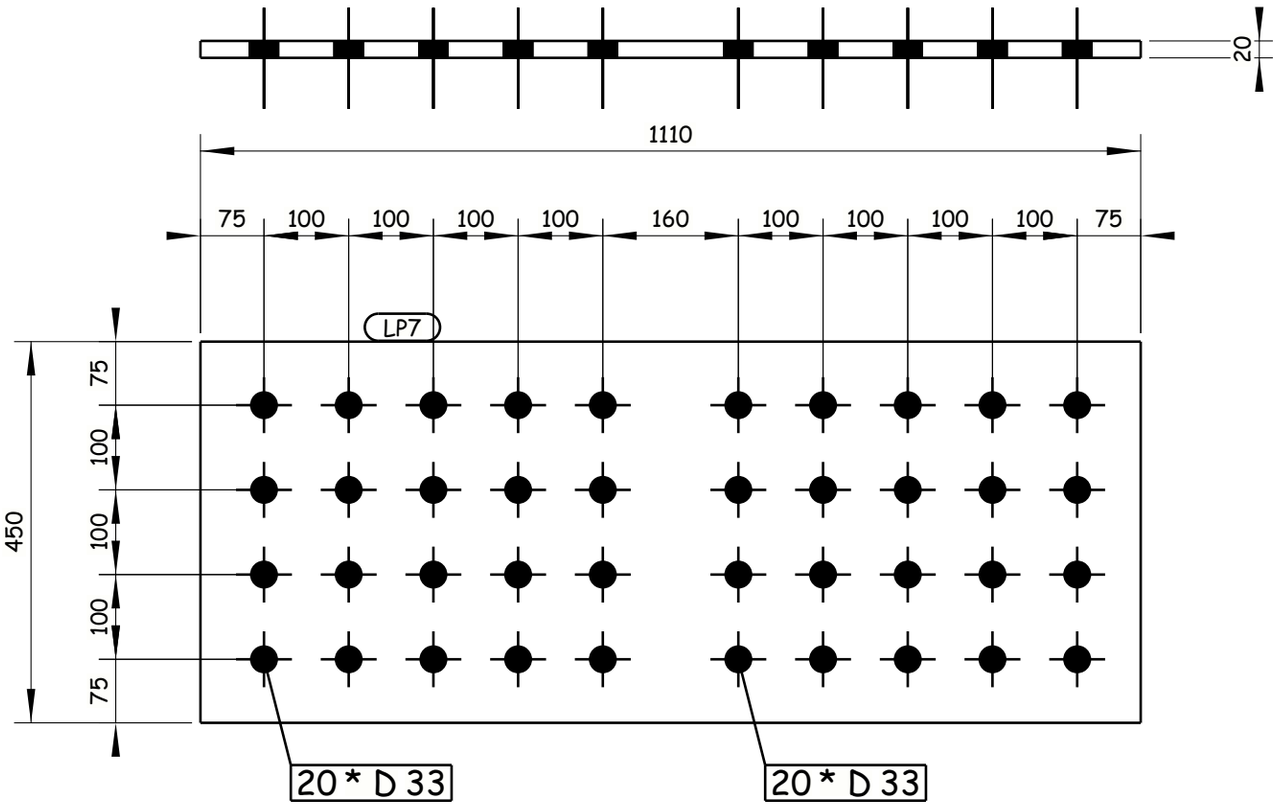

4 REQUIRED AS DRAWN E.SH LP7

GENERAL NOTES:

1. ALL DIMENSIONS ARE IN MILLIMETERS UNLESS OTHERWISE SPECIFIED.
2. LEVELS ARE IN METERS
3. DESIGN SERVICE LIFE OF 100 YEARS.
4. FLANGES OF TOP AND BOTTOM CHORDS TO BE SUPPLIED WITH IMPROVED THROUGH THICKNESS PROPERTIES Z25 ACCORDING TO EN10164.

REFERENCE DRAWINGS

1	93M-0407-SEN-6OL11-END-10118-B PAGE 01:17
2	
3	
4	
5	
6	
7	
8	
9	
10	
11	

6TH OF OCTOBER CITY RAIL TRANSIT MONORAIL &
NEW CAPITAL CITY RAIL TRANSIT MONORAIL

The Authority — Authority Consultant
Hill International
ORASCOM CONSTRUCTION — BOMBARDIER — Main Contractor
SENER — SHAKER CONSULTANCY GROUP — Designer

CONTRACTOR & CONSULTANT:
ENGINEERING HOUSE FOR CONSULTANCY

6 October Monorail
Engineering Unit
Valid For Construction

SCALE: AS SHOWN | SHOP DRAWING | DATE: 20.11.2024

DRAWING TITLE:
6TH OF OCTOBER MONORAIL
SHOP DRAWING FOR BRIDGE 6OL11-37
STEEL TRUSS (II).
LP7

REV	DATE	BY	DESCRIPTION	CHK	APD
A	20-11-24	E.SH	ISSUE FOR APPROVAL	A.SH	M.M

Project Code	Rubric	Initiator	Lot	Ref	Number	Revision
93M	0407	AAC	60L11	DWG	90316	A

Tekla structures

-Drawing shall be updated according to the comments on the GA drawing.
-Approval is subjected to the approval of coordination package between multi-discipline.

REVIEWED WITH COMMENT
MONORAILS PROJECT

All holes are 22mm U.N.O Length & Area & Weight per piece

Mark	Profile	Grade	QTY	Length	Area	Weight
LP8	PL15*240	S355J2N	84	730.0	0.38	20.6

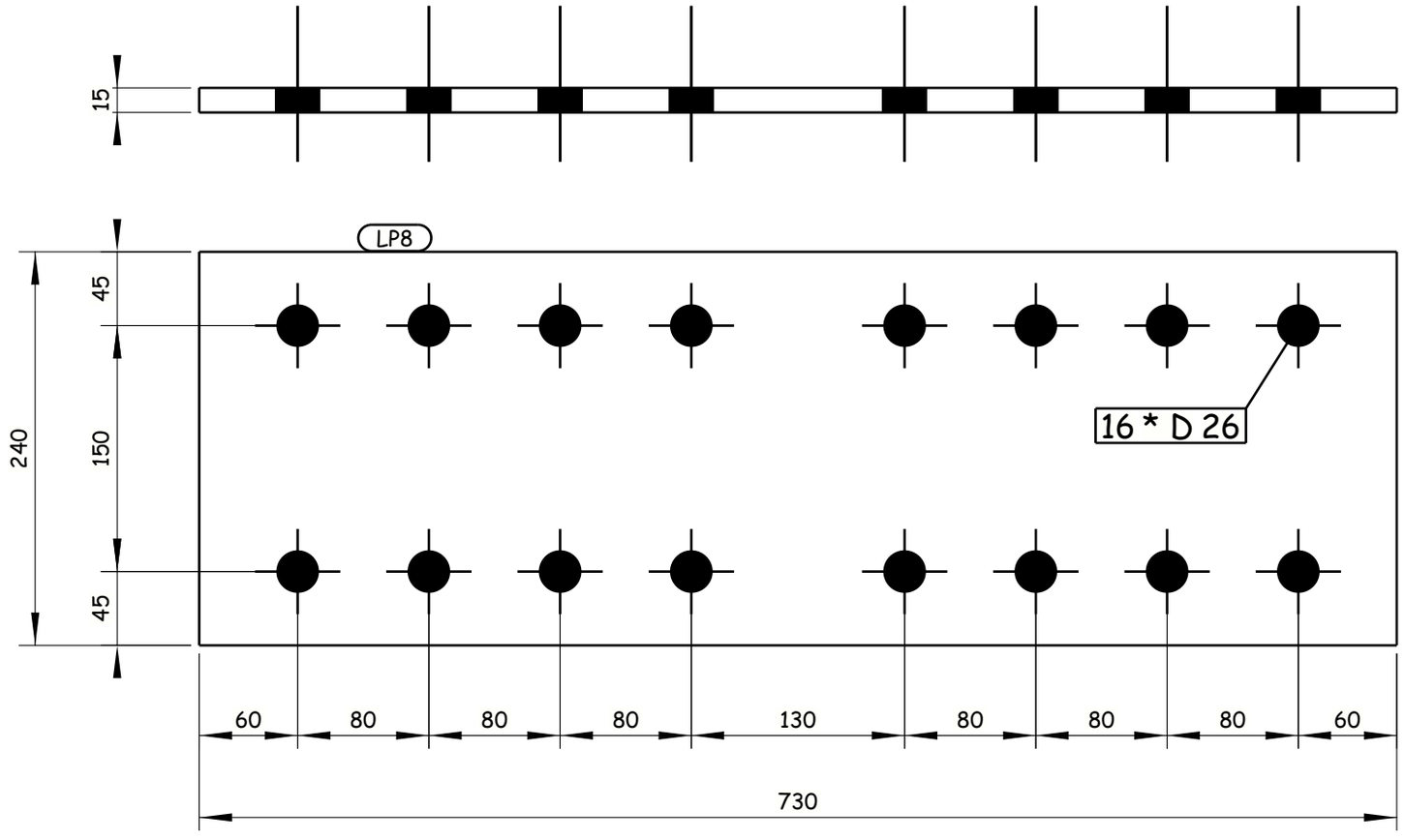

84 REQUIRED AS DRAWN E.SH LP8

GENERAL NOTES:

1. ALL DIMENSIONS ARE IN MILLIMETERS UNLESS OTHERWISE SPECIFIED.
2. LEVELS ARE IN METERS
3. DESIGN SERVICE LIFE OF 100 YEARS.
4. FLANGES OF TOP AND BOTTOM CHORDS TO BE SUPPLIED WITH IMPROVED THROUGH THICKNESS PROPERTIES Z25 ACCORDING TO EN10164.

REFERENCE DRAWINGS

1	93M-0407-SEN-6OL11-END-10118-B PAGE 01:17
2	
3	
4	
5	
6	
7	
8	
9	
10	
11	

6TH OF OCTOBER CITY RAIL TRANSIT MONORAIL &
NEW CAPITAL CITY RAIL TRANSIT MONORAIL

The Authority — Hill International — Authority Consultant
ORASCOM CONSTRUCTION — Main Contractor
BOMBARDIER
SENER — SHAKER CONSULTANCY GROUP — Designer

CONTRACTOR & CONSULTANT:
ENGINEERING HOUSE FOR CONSULTANCY

SCALE: AS SHOWN
CHK DRAWING
DATE: 20.11.2024

REV	DATE	BY	DESCRIPTION	CHK	APD
A	20-11-24	E.SH	ISSUE FOR APPROVAL	A.SH	M.M

6 October Monorail
Engineering Unit
Valid For Construction

DRAWING TITLE:
6TH OF OCTOBER MONORAIL
SHOP DRAWING FOR BRIDGE 6OL11-37
STEEL TRUSS (II).
LP8

Project Code	Rubric	Initiator	Lot	Ref	Number	Revision
93M	0407	AAC	60L11	DWG	90317	A

Tekla structures

-Drawing shall be updated according to the comments on the GA drawing.
-Approval is subjected to the approval of coordination package between multi-discipline.

REVIEWED WITH COMMENT
MONORAILS PROJECT

All holes are 22mm U.N.O Length & Area & Weight per piece

Mark	Profile	Grade	QTY	Length	Area	Weight
LP9	FLT15*90	S355J2N	168	730.0	0.16	7.7

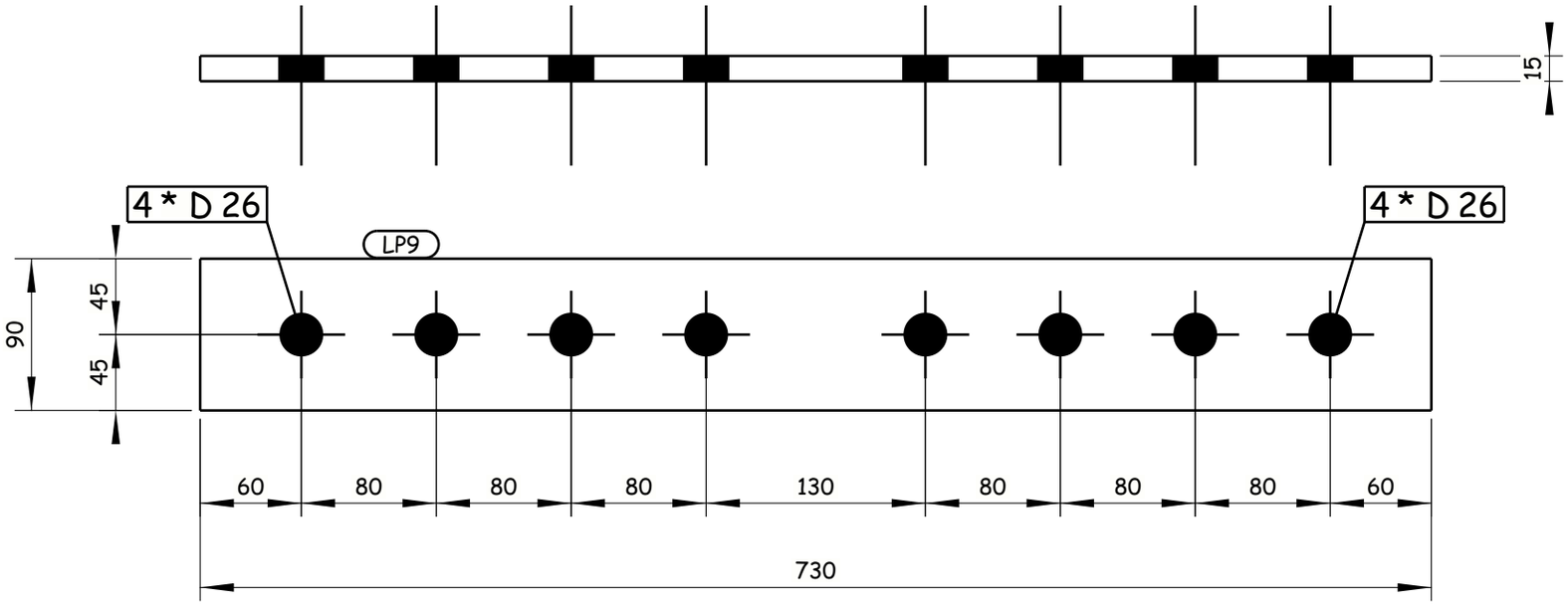

168 REQUIRED AS DRAWN E.SH LP9

6 October Monorail
Engineering Unit
Valid For Construction

Tekla structures

GENERAL NOTES:
1. ALL DIMENSIONS ARE IN MILLIMETERS UNLESS OTHERWISE SPECIFIED.
2. LEVELS ARE IN METERS
3. DESIGN SERVICE LIFE OF 100 YEARS.
4. FLANGES OF TOP AND BOTTOM CHORDS TO BE SUPPLIED WITH IMPROVED THROUGH THICKNESS PROPERTIES Z25 ACCORDING TO EN10164.

REFERENCE DRAWINGS

1	93M-0407-SEN-6OL11-END-10118-B PAGE 01:17
2	
3	
4	
5	
6	
7	
8	
9	
10	
11	

6TH OF OCTOBER CITY RAIL TRANSIT MONORAIL &
NEW CAPITAL CITY RAIL TRANSIT MONORAIL

The Authority
Hill International
Authority Consultant
Main Contractor
Designer

CONTRACTOR
CONSULTANT :
ENGINEERING HOUSE FOR CONSULTANCY

SCALE: AS SHOWN
CHD'DRAWING
DATE: 20.11.2024

REV	DATE	BY	DESCRIPTION	CHK	APD
A	20-11-24	E.SH	ISSUE FOR APPROVAL	A.SH	M.M

DRAWING TITLE:
6TH OF OCTOBER MONORAIL
SHOP DRAWING FOR BRIDGE 6OL11-37
STEEL TRUSS (II).
LP9

Project Code	Rubric	Initiator	Lot	Ref	Number	Revision
9 3 M	0 4 0 7	A A C	6 0 L 1 1	D W G	90318	A

-Drawing shall be updated according to the comments on the GA drawing.
-Approval is subjected to the approval of coordination package between multi-discipline.

REVIEWED WITH COMMENT
MONORAILS PROJECT

All holes are 22mm U.N.O Length & Area & Weight per piece

Mark	Profile	Grade	QTY	Length	Area	Weight
LP10	PL10*440	S355J2N	84	570.0	0.52	19.7

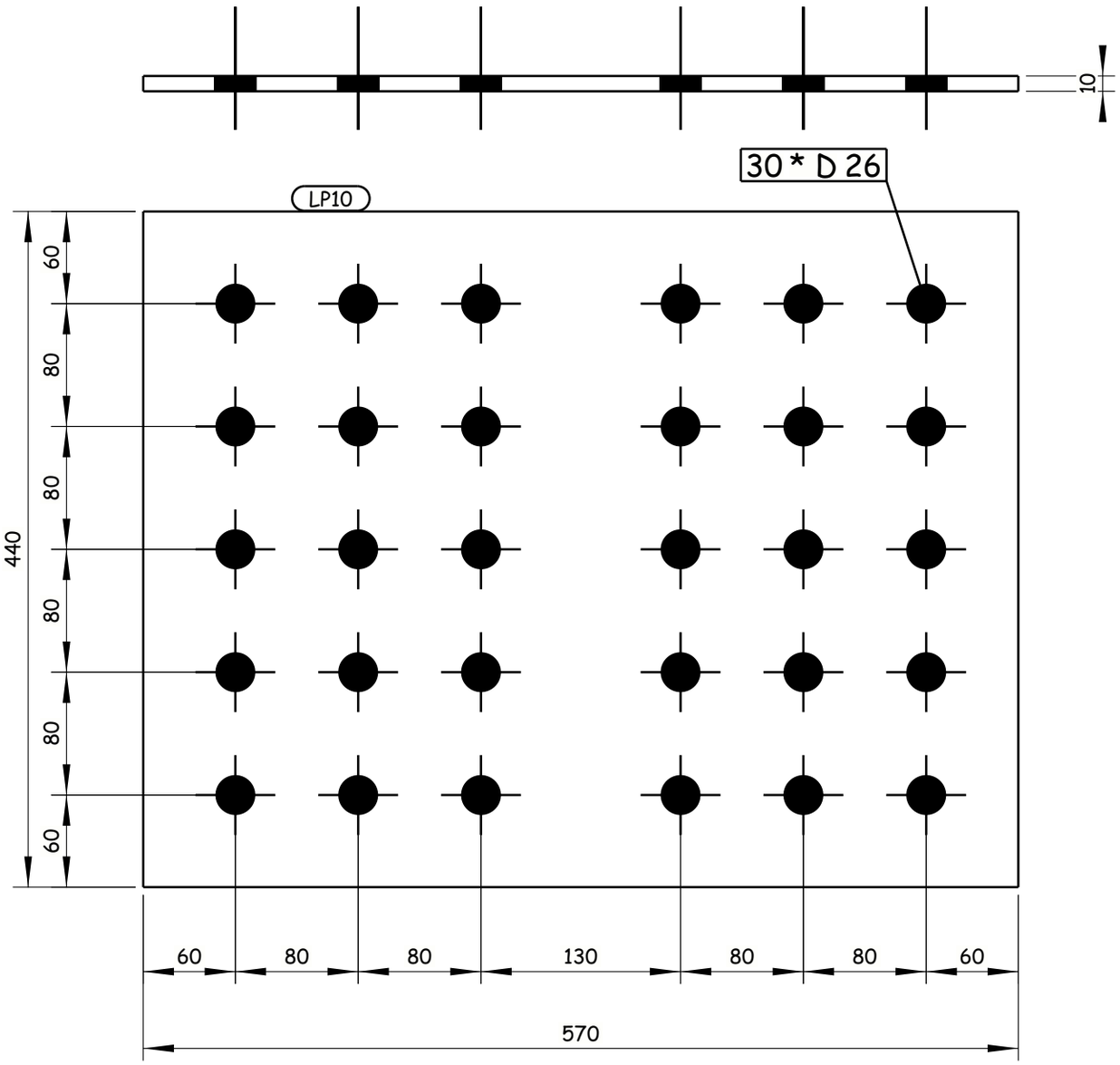

84 REQUIRED AS DRAWN E.SH LP10

Tekla structures

GENERAL NOTES:

1. ALL DIMENSIONS ARE IN MILLIMETERS UNLESS OTHERWISE SPECIFIED.
2. LEVELS ARE IN METERS
3. DESIGN SERVICE LIFE OF 100 YEARS.
4. FLANGES OF TOP AND BOTTOM CHORDS TO BE SUPPLIED WITH IMPROVED THROUGH THICKNESS PROPERTIES Z25 ACCORDING TO EN10164.

REFERENCE DRAWINGS

1	93M-0407-SEN-6OL11-END-10118-B PAGE 01:17
2	
3	
4	
5	
6	
7	
8	
9	
10	
11	

6TH OF OCTOBER CITY RAIL TRANSIT MONORAIL &
NEW CAPITAL CITY RAIL TRANSIT MONORAIL

The Authority
Hill International
Authority Consultant

ORASCOM CONSTRUCTION
Main Contractor

BOMBARDIER
SENER
SHAKER CONSULTANCY GROUP
Designer

CONTRACTOR & CONSULTANT:
ENGINEERING HOUSE FOR CONSULTANCY

6 October Monorail
Engineering Unit
Valid For Construction

SCALE	SHD DRAWING	DATE
AS SHOWN		20.11.2024

REV	DATE	BY	DESCRIPTION	CHK	APD
A	20-11-24	E.SH	ISSUE FOR APPROVAL	A.SH	M.M

DRAWING TITLE:
6TH OF OCTOBER MONORAIL
SHOP DRAWING FOR BRIDGE 6OL11-37
STEEL TRUSS (II).
LP10

Project Code	Rubric	Initiator	Lot	Ref	Number	Revision
93M	0407	AAC	60L11	DWG	90319	A

-Drawing shall be updated according to the comments on the GA drawing.
-Approval is subjected to the approval of coordination package between multi-discipline.

REVIEWED WITH COMMENT
MONORAILS PROJECT

All holes are 22mm U.N.O Length & Area & Weight per piece

Mark	Profile	Grade	QTY	Length	Area	Weight
LP11	PL15*370	S355J2N	8	570.0	0.45	24.8

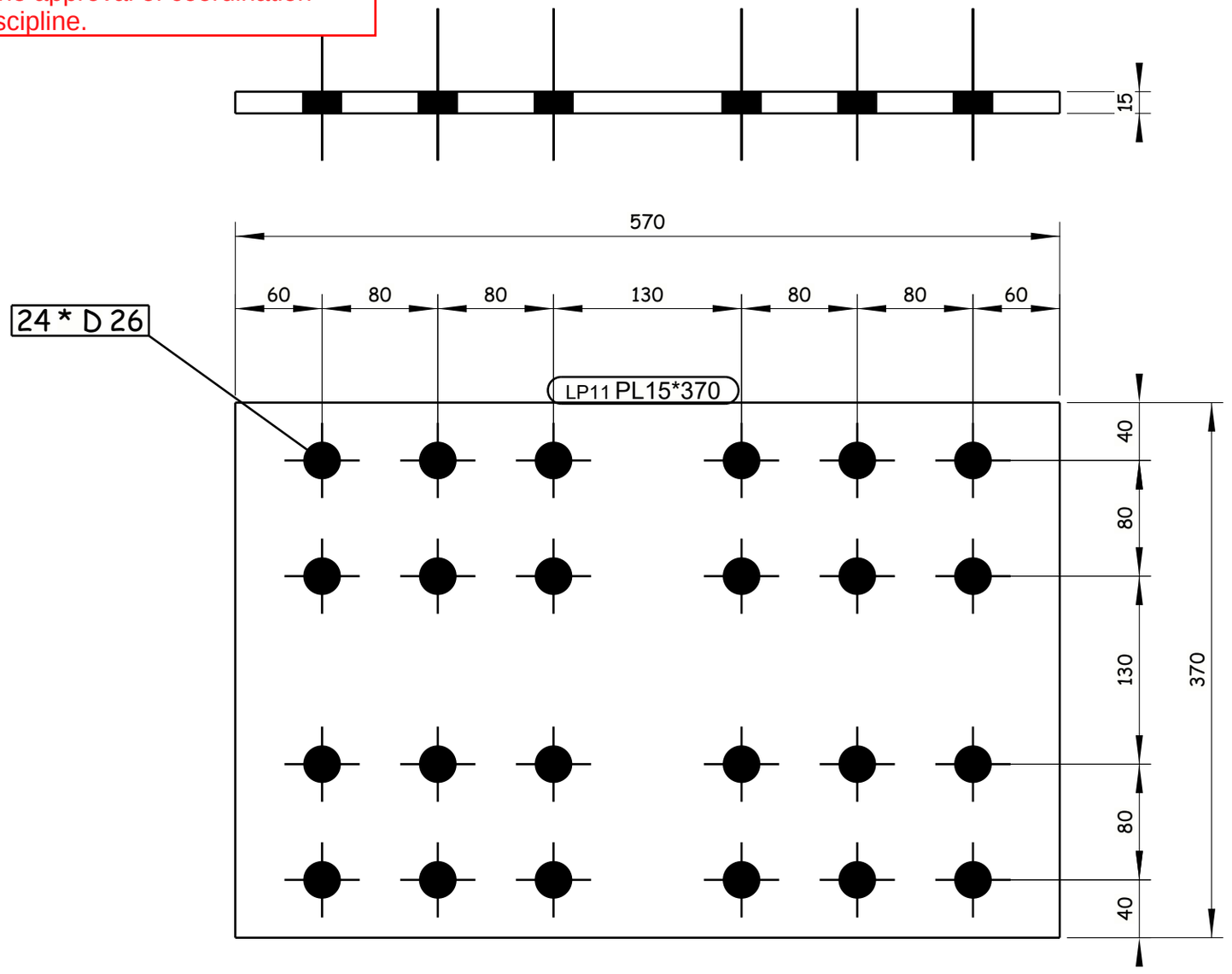

8 REQUIRED AS DRAWN E.SH LP11

GENERAL NOTES:

1. ALL DIMENSIONS ARE IN MILLIMETERS UNLESS OTHERWISE SPECIFIED.
2. LEVELS ARE IN METERS
3. DESIGN SERVICE LIFE OF 100 YEARS.
4. FLANGES OF TOP AND BOTTOM CHORDS TO BE SUPPLIED WITH IMPROVED THROUGH THICKNESS PROPERTIES Z25 ACCORDING TO EN10164.

REFERENCE DRAWINGS

1	93M-0407-SEN-6OL11-END-10118-B PAGE 01:17
2	
3	
4	
5	
6	
7	
8	
9	
10	
11	

6TH OF OCTOBER CITY RAIL TRANSIT MONORAIL &
NEW CAPITAL CITY RAIL TRANSIT MONORAIL

The Authority — Hill International — Authority Consultant
ORASCOM CONSTRUCTION — Main Contractor
BOMBARDIER
SENER — SHAKER CONSULTANCY GROUP — Designer

CONTRACTOR & CONSULTANT:
ENGINEERING HOUSE FOR CONSULTANCY

SCALE: AS SHOWN
CHK'D DRAWING
DATE: 20.11.2024

REV	DATE	BY	DESCRIPTION	CHK	APD
A	20-11-24	E.SH	ISSUE FOR APPROVAL	A.SH	M.M

6 October Monorail
Engineering Unit
Valid For Construction

DRAWING TITLE:
6TH OF OCTOBER MONORAIL
SHOP DRAWING FOR BRIDGE 6OL11-37
STEEL TRUSS (II).
LP11

Project Code	Rubric	Initiator	Lot	Ref	Number	Revision
9 3 M	0 4 0 7	A A C	6 0 L 1 1	D W G	90320	A

Tekla structures

-Drawing shall be updated according to the comments on the GA drawing.
-Approval is subjected to the approval of coordination package between multi-discipline.

REVIEWED WITH COMMENT
MONORAILS PROJECT

All holes are 22mm U.N.O Length & Area & Weight per piece

Mark	Profile	Grade	QTY	Length	Area	Weight
LP12	PL15*160	S355J2N	16	570.0	0.20	10.7

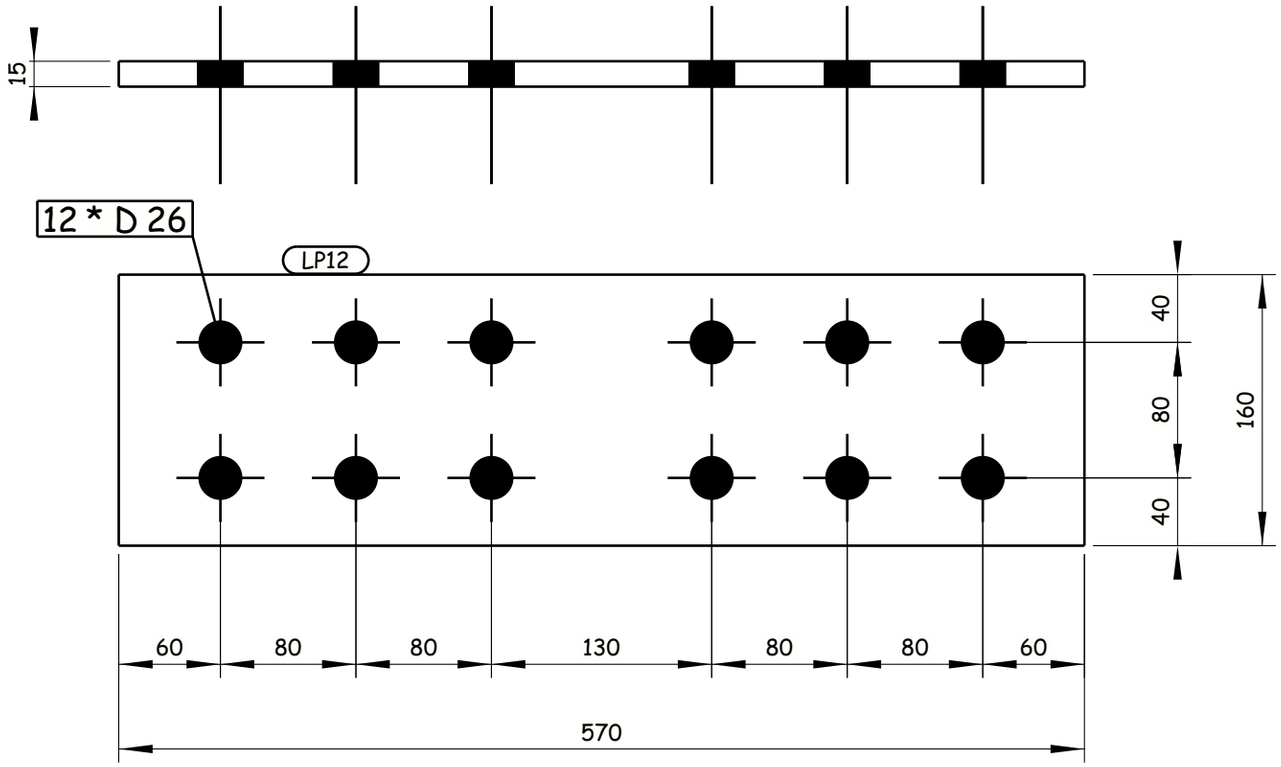

16 REQUIRED AS DRAWN E.SH LP12

Tekla structures

GENERAL NOTES:

1. ALL DIMENSIONS ARE IN MILLIMETERS UNLESS OTHERWISE SPECIFIED.
2. LEVELS ARE IN METERS
3. DESIGN SERVICE LIFE OF 100 YEARS.
4. FLANGES OF TOP AND BOTTOM CHORDS TO BE SUPPLIED WITH IMPROVED THROUGH THICKNESS PROPERTIES Z25 ACCORDING TO EN10164.

REFERENCE DRAWINGS

1	93M-0407-SEN-6OL11-END-10118-B PAGE 01:17
2	
3	
4	
5	
6	
7	
8	
9	
10	
11	

6TH OF OCTOBER CITY RAIL TRANSIT MONORAIL &
NEW CAPITAL CITY RAIL TRANSIT MONORAIL

The Authority — Hill International Authority Consultant — ORASCOM CONSTRUCTION — BOMBARDIER — Main Contractor — SENER — SHAKER CONSULTANCY GROUP — Designer

CONTRACTOR CONSULTANT : EHC ENGINEERING HOUSE FOR CONSULTANCY

SCALE	CHD'DRWING	DATE
AS SHOWN		20.11.2024

REV	DATE	BY	DESCRIPTION	CHK	APD
A	20-11-24	E.SH	ISSUE FOR APPROVAL	A.SH	M.M

6 October Monorail Engineering Unit
Valid For Construction

DRAWING TITLE:
6TH OF OCTOBER MONORAIL
SHOP DRAWING FOR BRIDGE 6OL11-37
STEEL TRUSS (II).
LP12

Project Code	Rubric	Initiator	Lot	Ref	Number	Revision
93M	0407	ACC	60LL11	DWG	90321	A

-Drawing shall be updated according to the comments on the GA drawing.
-Approval is subjected to the approval of coordination package between multi-discipline.

REVIEWED WITH COMMENT
MONORAILS PROJECT

All holes are 22mm U.N.O Length & Area & Weight per piece

Mark	Profile	Grade	QTY	Length	Area	Weight
LP13	PL10*280	S355J2N	8	410.0	0.24	9.0

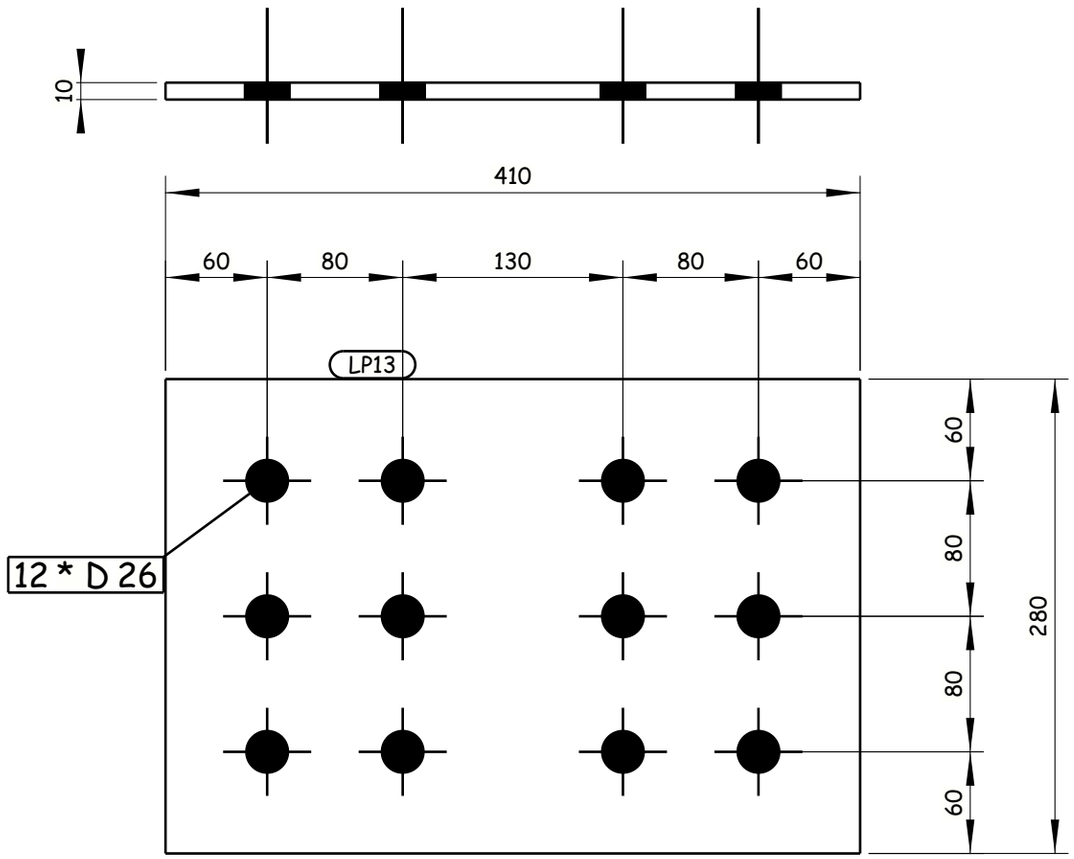

8 REQUIRED AS DRAWN E.SH LP13

GENERAL NOTES:

1. ALL DIMENSIONS ARE IN MILLIMETERS UNLESS OTHERWISE SPECIFIED.
2. LEVELS ARE IN METERS
3. DESIGN SERVICE LIFE OF 100 YEARS.
4. FLANGES OF TOP AND BOTTOM CHORDS TO BE SUPPLIED WITH IMPROVED THROUGH THICKNESS PROPERTIES Z25 ACCORDING TO EN10164.

REFERENCE DRAWINGS

1	93M-0407-SEN-6OL11-END-10118-B PAGE 01:17
2	
3	
4	
5	
6	
7	
8	
9	
10	
11	

6TH OF OCTOBER CITY RAIL TRANSIT MONORAIL &
NEW CAPITAL CITY RAIL TRANSIT MONORAIL

The Authority — Hill International — Authority Consultant
ORASCOM CONSTRUCTION — Main Contractor
BOMBARDIER — Designer
SENER / SHAKER CONSULTANCY GROUP

CONTRACTOR & CONSULTANT:
ENGINEERING HOUSE FOR CONSULTANCY

6 October Monorail
Engineering Unit
Valid For Cönstruction

SCALE	SHOP DRAWING	DATE
AS SHOWN		20.11.2024

REV	DATE	BY	DESCRIPTION	CHK	APD
A	20-11-24	E.SH	ISSUE FOR APPROVAL	A.SH	M.M

DRAWING TITLE:
6TH OF OCTOBER MONORAIL
SHOP DRAWING FOR BRIDGE 6OL11-37
STEEL TRUSS (II).
LP13

Project Code	Rubric	Initiator	Lot	Ref	Number	Revision
93M	0407	AAC	60L11	DWG	90322	A

Tekla structures

-Drawing shall be updated according to the comments on the GA drawing.
-Approval is subjected to the approval of coordination package between multi-discipline.

REVIEWED WITH COMMENT
MONORAILS PROJECT

All holes are 22mm U.N.O Length & Area & Weight per piece

Mark	Profile	Grade	QTY	Length	Area	Weight
LP14	FLT20*350	S355J2N	4	1110.0	0.84	61.0

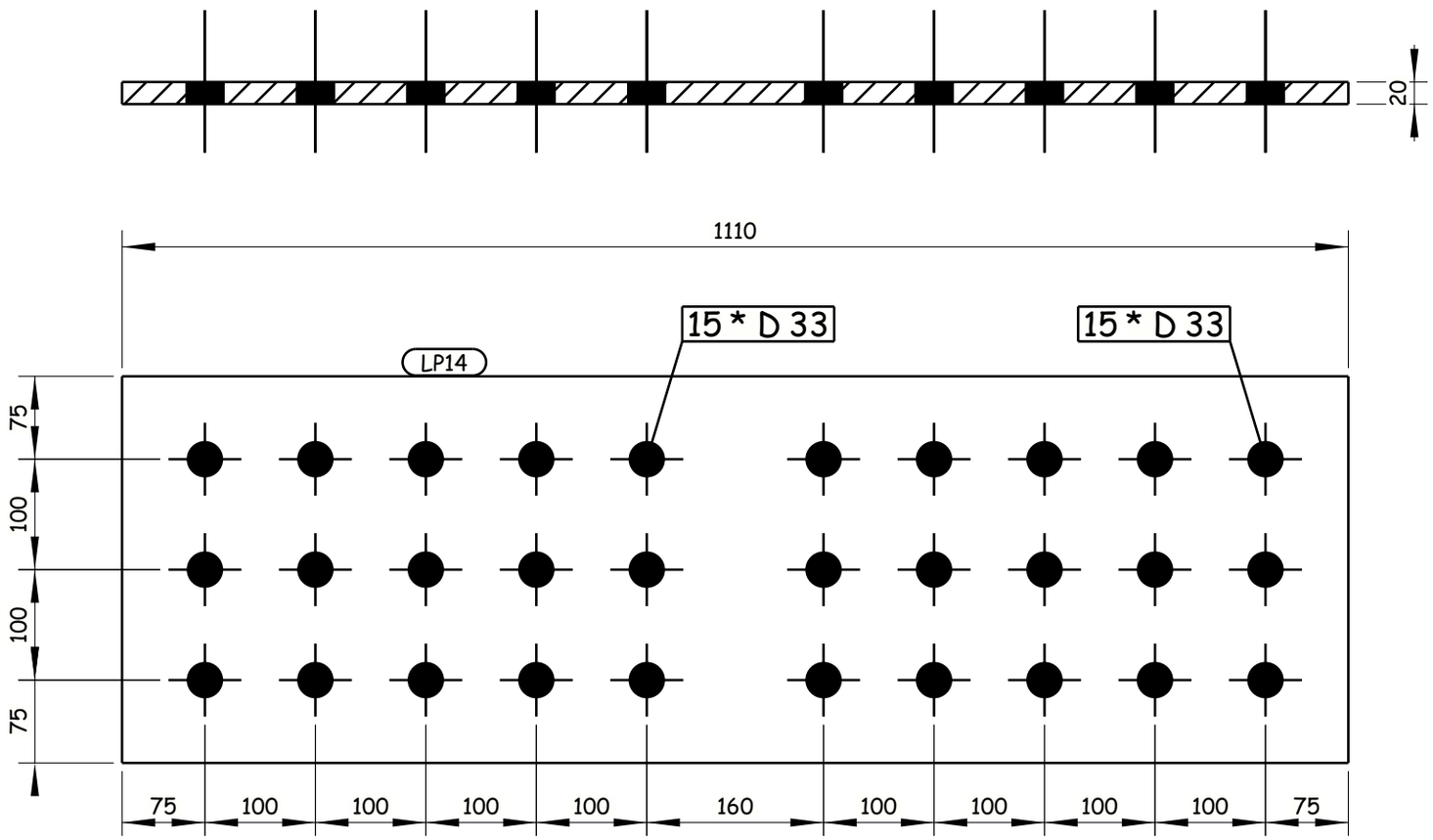

4 REQUIRED AS DRAWN E.SH LP14

GENERAL NOTES:

1. ALL DIMENSIONS ARE IN MILLIMETERS UNLESS OTHERWISE SPECIFIED.
2. LEVELS ARE IN METERS
3. DESIGN SERVICE LIFE OF 100 YEARS.
4. FLANGES OF TOP AND BOTTOM CHORDS TO BE SUPPLIED WITH IMPROVED THROUGH THICKNESS PROPERTIES Z25 ACCORDING TO EN10164.

REFERENCE DRAWINGS

1	93M-0407-SEN-6OL11-END-10118-B PAGE 01:17
2	
3	
4	
5	
6	
7	
8	
9	
10	
11	

6TH OF OCTOBER CITY RAIL TRANSIT MONORAIL &
NEW CAPITAL CITY RAIL TRANSIT MONORAIL

The Authority — Hill International Authority Consultant — Main Contractor — Designer

CONTRACTOR/ CONSULTANT:

ENGINEERING HOUSE FOR CONSULTANCY

6 October Monorail Engineering Unit
Valid For Construction

SCALE: AS SHOWN | SHOP DRAWING | DATE: 20.11.2024

DRAWING TITLE:
6TH OF OCTOBER MONORAIL
SHOP DRAWING FOR BRIDGE 6OL11-37
STEEL TRUSS (II).
LP14

REV	DATE	BY	DESCRIPTION	CHK	APD
A	20-11-24	E.SH	ISSUE FOR APPROVAL	A.SH	M.M

Project Code	Rubric	Initiator	Lot	Ref	Number	Revision
93M	0407	AAC	60L11	DWG	90323	A

Tekla structures

-Drawing shall be updated according to the comments on the GA drawing.
-Approval is subjected to the approval of coordination package between multi-discipline.

REVIEWED WITH COMMENT
MONORAILS PROJECT

All holes are 22mm U.N.O Length & Area & Weight per piece

Mark	Profile	Grade	QTY	Length	Area	Weight
S1	ROD22	S235***	3584	175.0	0.01	0.5

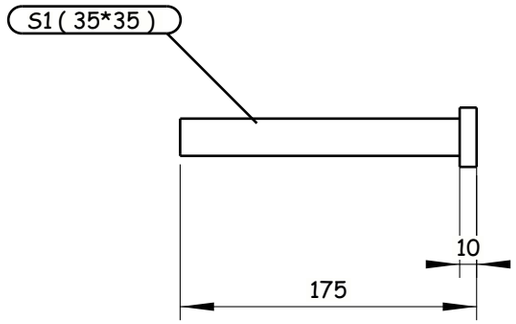

3584 REQUIRED AS DRAWN E.SH S1

6 October Monorail
Engineering Unit
Valid For Construction

Tekla structures

GENERAL NOTES:

1. ALL DIMENSIONS ARE IN MILLIMETERS UNLESS OTHERWISE SPECIFIED.
2. LEVELS ARE IN METERS
3. DESIGN SERVICE LIFE OF 100 YEARS.
4. FLANGES OF TOP AND BOTTOM CHORDS TO BE SUPPLIED WITH IMPROVED THROUGH THICKNESS PROPERTIES Z25 ACCORDING TO EN10164.

REFERENCE DRAWINGS

1	93M-0407-SEN-6OL11-END-10118-B PAGE 01:17
2	
3	
4	
5	
6	
7	
8	
9	
10	
11	

6TH OF OCTOBER CITY RAIL TRANSIT MONORAIL &
NEW CAPITAL CITY RAIL TRANSIT MONORAIL

The Authority — Hill International Authority Consultant

Main Contractor: ORASCOM CONSTRUCTION, BOMBARDIER

Designer: SENER, SHAKER CONSULTANCY GROUP

CONTRACTOR / CONSULTANT: EHC ENGINEERING HOUSE FOR CONSULTANCY

SCALE: AS SHOWN | CHD DRAWING | DATE: 20.11.2024

REV	DATE	BY	DESCRIPTION	CHK	APD
A	20-11-24	E.SH	ISSUE FOR APPROVAL	A.SH	M.M

DRAWING TITLE:
6TH OF OCTOBER MONORAIL
SHOP DRAWING FOR BRIDGE 6OL11-37
STEEL TRUSS (II).
S1

Project Code	Rubric	Initiator	Lot	Ref	Number	Revision
93M	0407	AAC	60L11	DWG	90324	A

-Drawing shall be updated according to the comments on the GA drawing.
-Approval is subjected to the approval of coordination package between multi-discipline.

REVIEWED WITH COMMENT
MONORAILS PROJECT

All holes are 22mm U.N.O Length & Area & Weight per piece

Mark	Profile	Grade	QTY	Length	Area	Weight
S2	ROD22	S235***	462	175.0	0.01	0.5

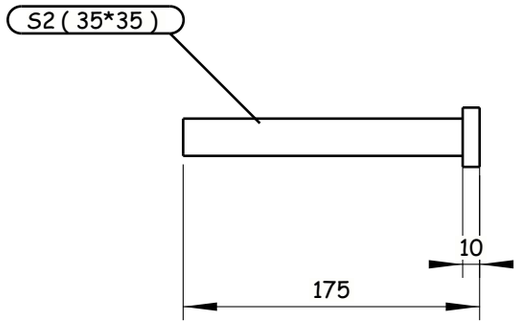

462 REQUIRED AS DRAWN E.SH S2

6 October Monorail
Engineering Unit
Valid For Construction

Tekla structures

GENERAL NOTES:
1. ALL DIMENSIONS ARE IN MILLIMETERS UNLESS OTHERWISE SPECIFIED.
2. LEVELS ARE IN METERS
3. DESIGN SERVICE LIFE OF 100 YEARS.
4. FLANGES OF TOP AND BOTTOM CHORDS TO BE SUPPLIED WITH IMPROVED THROUGH THICKNESS PROPERTIES Z25 ACCORDING TO EN10164.

REFERENCE DRAWINGS

1	93M-0407-SEN-6OL11-END-10118-B PAGE 01:17
2	
3	
4	
5	
6	
7	
8	
9	
10	
11	

6TH OF OCTOBER CITY RAIL TRANSIT MONORAIL &
NEW CAPITAL CITY RAIL TRANSIT MONORAIL

The Authority
Hill International
Authority Consultant

Main Contractor

Designer

CONTRACTOR / CONSULTANT:
ENGINEERING HOUSE FOR CONSULTANCY

SCALE: AS SHOWN | CHD DRAWING | DATE: 20.11.2024

REV	DATE	BY	DESCRIPTION	CHK	APD
A	20-11-24	E.SH	ISSUE FOR APPROVAL	A.SH	M.M

DRAWING TITLE:
6TH OF OCTOBER MONORAIL
SHOP DRAWING FOR BRIDGE 6OL11-37
STEEL TRUSS (II).
S2

Project Code	Rubric	Initiator	Lot	Ref	Number	Revision
93M	0407	AAC	60L11	DWG	90325	A

All holes are 22mm U.N.O Length & Area & Weight per piece						
W1	PL35*1212.3	S355J2N	4	2049.8	4.18	543.2
Mark	Profile	Grade	QTY	Length	Area	Weight

-Drawing shall be updated according to the comments on the GA drawing.
-Approval is subjected to the approval of coordination package between multi-discipline.

REVIEWED WITH COMMENT
MONORAILS PROJECT

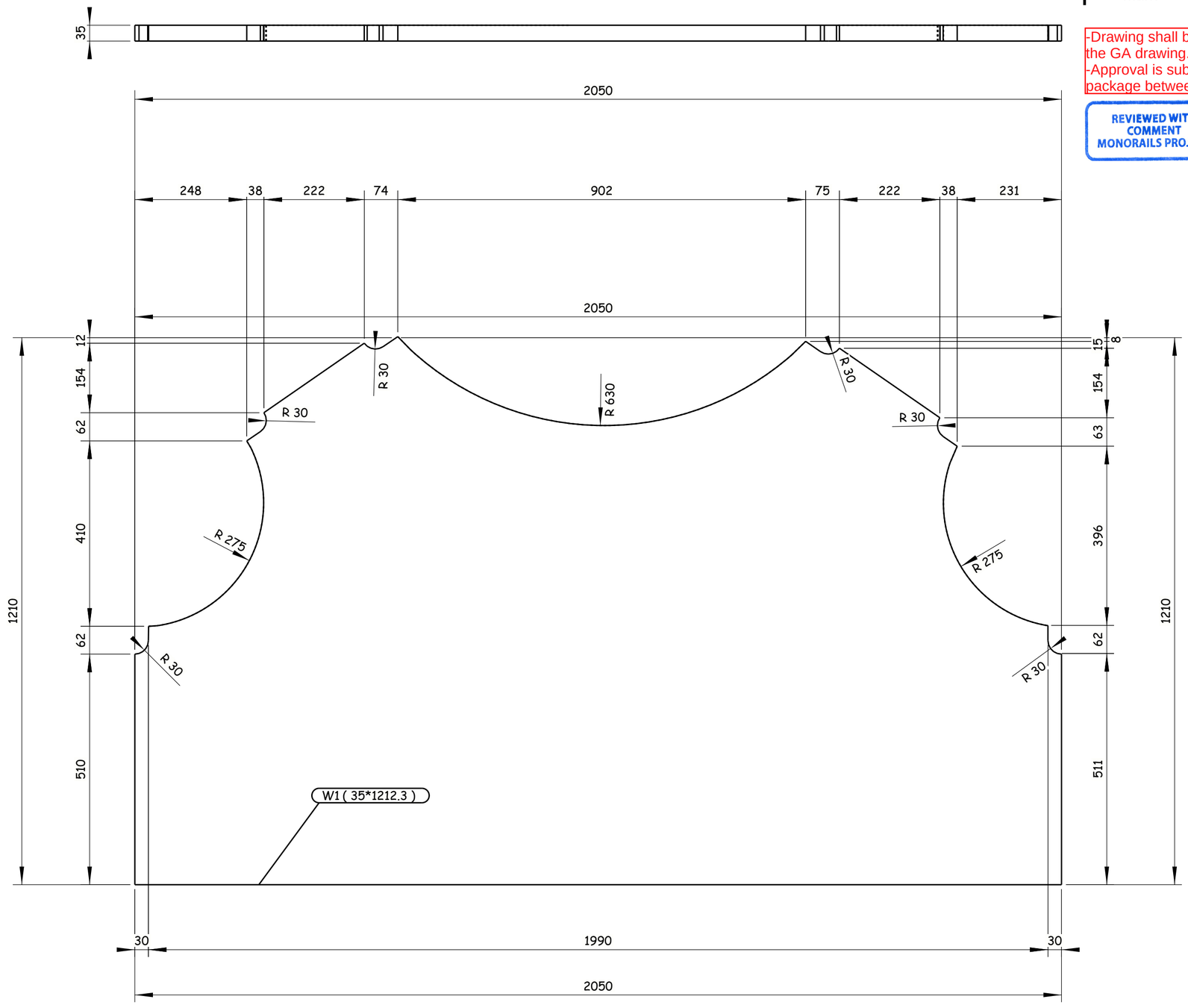

4 REQUIRED AS DRAWN E.SH W1

GENERAL NOTES:

1. ALL DIMENSIONS ARE IN MILLIMETERS UNLESS OTHERWISE SPECIFIED.
2. LEVELS ARE IN METERS
3. DESIGN SERVICE LIFE OF 100 YEARS.
4. FLANGES OF TOP AND BOTTOM CHORDS TO BE SUPPLIED WITH IMPROVED THROUGH THICKNESS PROPERTIES Z25 ACCORDING TO EN10164.

REFERENCE DRAWINGS

1	93M-0407-SEN-6OL11-END-10118-B PAGE 01:17
2	
3	
4	
5	
6	
7	
8	
9	
10	
11	

6TH OF OCTOBER CITY RAIL TRANSIT MONORAIL &
NEW CAPITAL CITY RAIL TRANSIT MONORAIL

The Authority — Authority Consultant: Hill International — Main Contractor: ORASCOM CONSTRUCTION — BOMBARDIER — Designer: SENER / SHAKER CONSOLIDATED GROUP

CONTRACTOR / CONSULTANT: ENGINEERING HOUSE FOR CONSULTANCY

SCALE	SHOP DRAWING	DATE
AS SHOWN		20.11.2024

REV	DATE	BY	DESCRIPTION	CHK	APD
A	20-11-24	E.SH	ISSUE FOR APPROVAL	A.SH	M.M

6 October Monorail
Engineering Unit
Valid For Construction

DRAWING TITLE:
6TH OF OCTOBER MONORAIL
SHOP DRAWING FOR BRIDGE 6OL11-37
STEEL TRUSS (II).
W1

Project Code	Rubric	Initiator	Lot	Ref	Number	Revision
9 3 M	0 4 0 7	A A C	6 0 L 1 1	D W G	90326	A

Tekla structures

All holes are 22mm U.N.O Length & Area & Weight per piece						
W2	PL35*1191.6	S355J2N	1	2050.9	4.13	536.9
Mark	Profile	Grade	QTY	Length	Area	Weight

-Drawing shall be updated according to the comments on the GA drawing.
-Approval is subjected to the approval of coordination package between multi-discipline.

REVIEWED WITH COMMENT
MONORAILS PROJECT

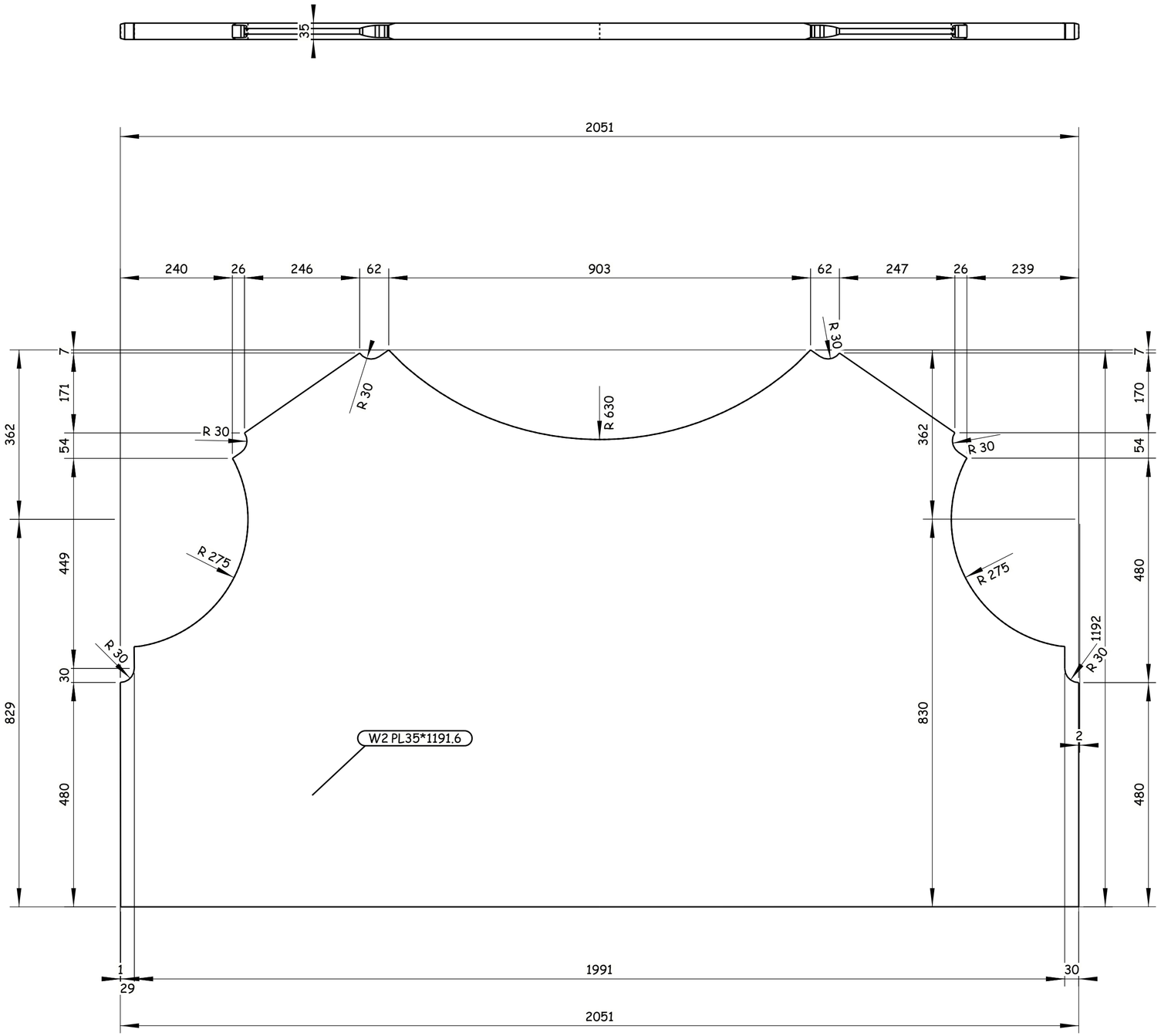

1 REQUIRED AS DRAWN E.SH W2

Tekla structures

GENERAL NOTES:

1. ALL DIMENSIONS ARE IN MILLIMETERS UNLESS OTHERWISE SPECIFIED.
2. LEVELS ARE IN METERS
3. DESIGN SERVICE LIFE OF 100 YEARS.
4. FLANGES OF TOP AND BOTTOM CHORDS TO BE SUPPLIED WITH IMPROVED THROUGH THICKNESS PROPERTIES Z25 ACCORDING TO EN10164.

REFERENCE DRAWINGS

1	93M-0407-SEN-6OL11-END-10118-B PAGE 01:17
2	
3	
4	
5	
6	
7	
8	
9	
10	
11	

6TH OF OCTOBER CITY RAIL TRANSIT MONORAIL &
NEW CAPITAL CITY RAIL TRANSIT MONORAIL

The Authority — Hill International — Authority Consultant
ORASCOM CONSTRUCTION — Main Contractor
BOMBARDIER
SENER — SHAKER CONSULTANCY GROUP — Designer

CONTRACTOR
CONSULTANT
ENGINEERING HOUSE FOR CONSULTANCY

REV	DATE	BY	DESCRIPTION	CHK	APD
A	20-11-24	E.SH	ISSUE FOR APPROVAL	A.SH	M.M

SCALE: AS SHOWN
SHOP DRAWING
DATE: 20.11.2024

6 October Monorail
Engineering Unit
Valid For Construction

DRAWING TITLE:
6TH OF OCTOBER MONORAIL
SHOP DRAWING FOR BRIDGE 6OL11-37
STEEL TRUSS (II).
W2

Project Code	Rubric	Initiator	Lot	Ref	Number	Revision
93M	0407	AAC	60L11	DWG	90327	A

All holes are 22mm U.N.O Length & Area & Weight per piece						
W3	PL35*1194.6	S355J2N	1	2050.1	4.13	537.6
Mark	Profile	Grade	QTY	Length	Area	Weight

-Drawing shall be updated according to the comments on the GA drawing.
-Approval is subjected to the approval of coordination package between multi-discipline.

REVIEWED WITH COMMENT
MONORAILS PROJECT

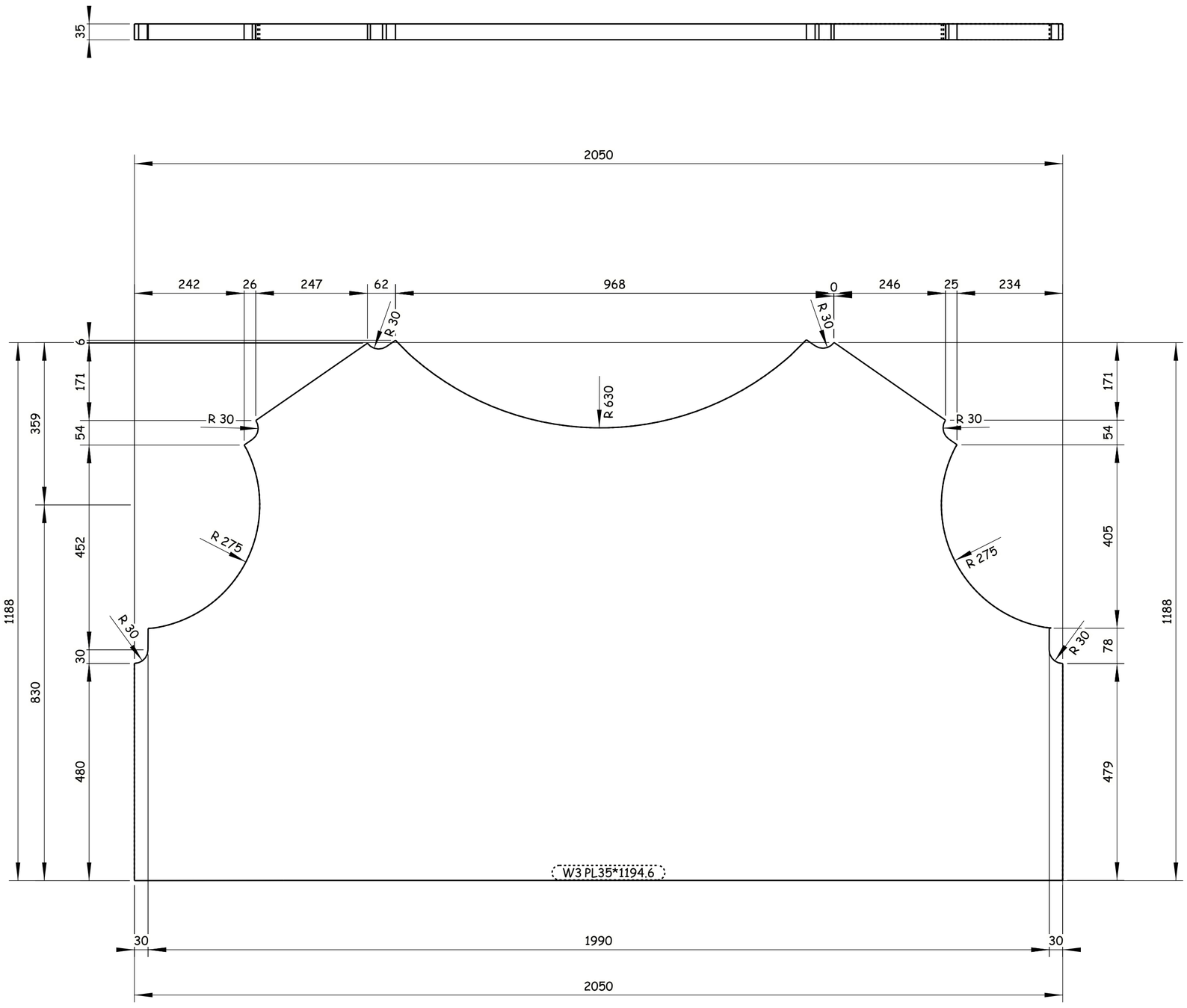

1 REQUIRED AS DRAWN E.SH W3

GENERAL NOTES:

1. ALL DIMENSIONS ARE IN MILLIMETERS UNLESS OTHERWISE SPECIFIED.
2. LEVELS ARE IN METERS
3. DESIGN SERVICE LIFE OF 100 YEARS.
4. FLANGES OF TOP AND BOTTOM CHORDS TO BE SUPPLIED WITH IMPROVED THROUGH THICKNESS PROPERTIES Z25 ACCORDING TO EN10164.

REFERENCE DRAWINGS

1	93M-0407-SEN-6OL11-END-10118-B PAGE 01:17
2	
3	
4	
5	
6	
7	
8	
9	
10	
11	

6TH OF OCTOBER CITY RAIL TRANSIT MONORAIL &
NEW CAPITAL CITY RAIL TRANSIT MONORAIL

The Authority — Hill International Authority Consultant — ORASCOM CONSTRUCTION — BOMBARDIER — Main Contractor — SENER — SHAKER CONSULTANCY GROUP — Designer

CONTRACTOR
CONSULTANT:
ENGINEERING HOUSE FOR CONSULTANCY

SCALE		DRAWING	DATE
AS SHOWN		SHOP DRAWING	20.11.2024

REV	DATE	BY	DESCRIPTION	CHK	APD
A	20-11-24	E.SH	ISSUE FOR APPROVAL	A.SH	M.M

6 October Monorail
Engineering Unit
Valid For Construction

DRAWING TITLE:
6TH OF OCTOBER MONORAIL
SHOP DRAWING FOR BRIDGE 6OL11-37
STEEL TRUSS (II).
W3

Project Code	Rubric	Initiator	Lot	Ref	Number	Revision
93M	0407	AAC	60L11	DWG	90328	A

Tekla structures

All holes are 22mm U.N.O Length & Area & Weight per piece						
W4	PL35*1192.2	S355J2N	1	2051.3	4.12	536.2
Mark	Profile	Grade	QTY	Length	Area	Weight

-Drawing shall be updated according to the comments on the GA drawing.
-Approval is subjected to the approval of coordination package between multi-discipline.

REVIEWED WITH COMMENT
MONORAILS PROJECT

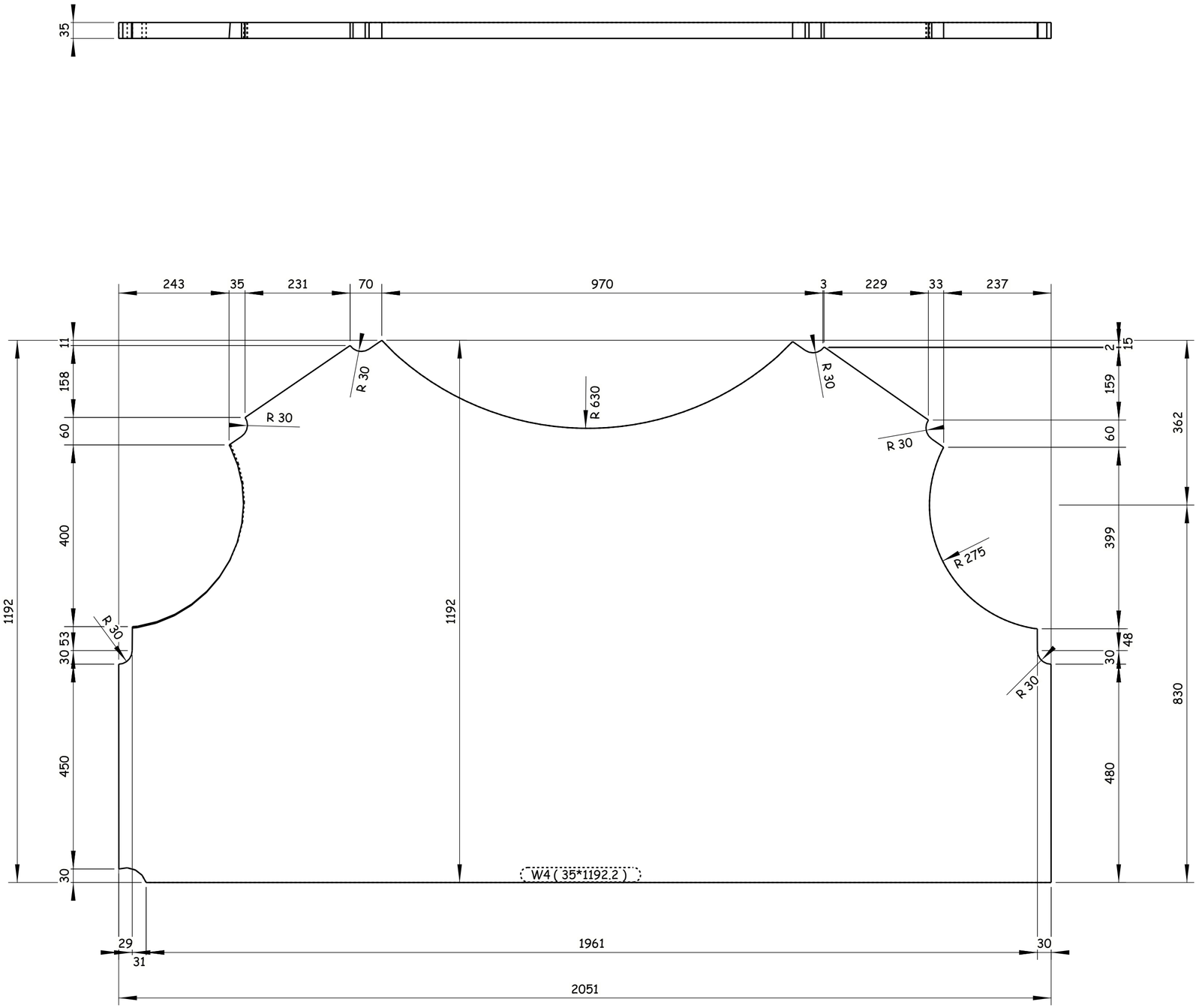

1 REQUIRED AS DRAWN E.SH W4

Tekla structures

GENERAL NOTES:

1. ALL DIMENSIONS ARE IN MILLIMETERS UNLESS OTHERWISE SPECIFIED.
2. LEVELS ARE IN METERS
3. DESIGN SERVICE LIFE OF 100 YEARS.
4. FLANGES OF TOP AND BOTTOM CHORDS TO BE SUPPLIED WITH IMPROVED THROUGH THICKNESS PROPERTIES Z25 ACCORDING TO EN10164.

REFERENCE DRAWINGS

1	93M-0407-SEN-6OL11-END-10118-B PAGE 01:17
2	
3	
4	
5	
6	
7	
8	
9	
10	
11	

6TH OF OCTOBER CITY RAIL TRANSIT MONORAIL &
NEW CAPITAL CITY RAIL TRANSIT MONORAIL

The Authority
Hill International
Authority Consultant

ORASCOM CONSTRUCTION
Main Contractor

BOMBARDIER
SENER
SHAKER CONSULTANCY GROUP
Designer

CONTRACTOR
CONSULTANT
ENGINEERING HOUSE FOR CONSULTANCY

SCALE: AS SHOWN | SHOP DRAWING | DATE: 20.11.2024

REV	DATE	BY	DESCRIPTION	CHK	APD
A	20-11-24	E.SH	ISSUE FOR APPROVAL	A.SH	M.M

6 October Monorail
Engineering Unit
Valid For Construction

DRAWING TITLE:
6TH OF OCTOBER MONORAIL
SHOP DRAWING FOR BRIDGE 6OL11-37
STEEL TRUSS (II).
W4

Project Code	Rubric	Initiator	Lot	Ref	Number	Revision
93M	0407	AAC	60L11	DWG	90329	A

-Drawing shall be updated according to the comments on the GA drawing.
-Approval is subjected to the approval of coordination package between multi-discipline.

REVIEWED WITH COMMENT
MONORAILS PROJECT

All holes are 22mm U.N.O Length & Area & Weight per piece

Mark	Profile	Grade	QTY	Length	Area	Weight
W5	PL35*1191.6	S355J2N	3	2050.0	4.12	536.3

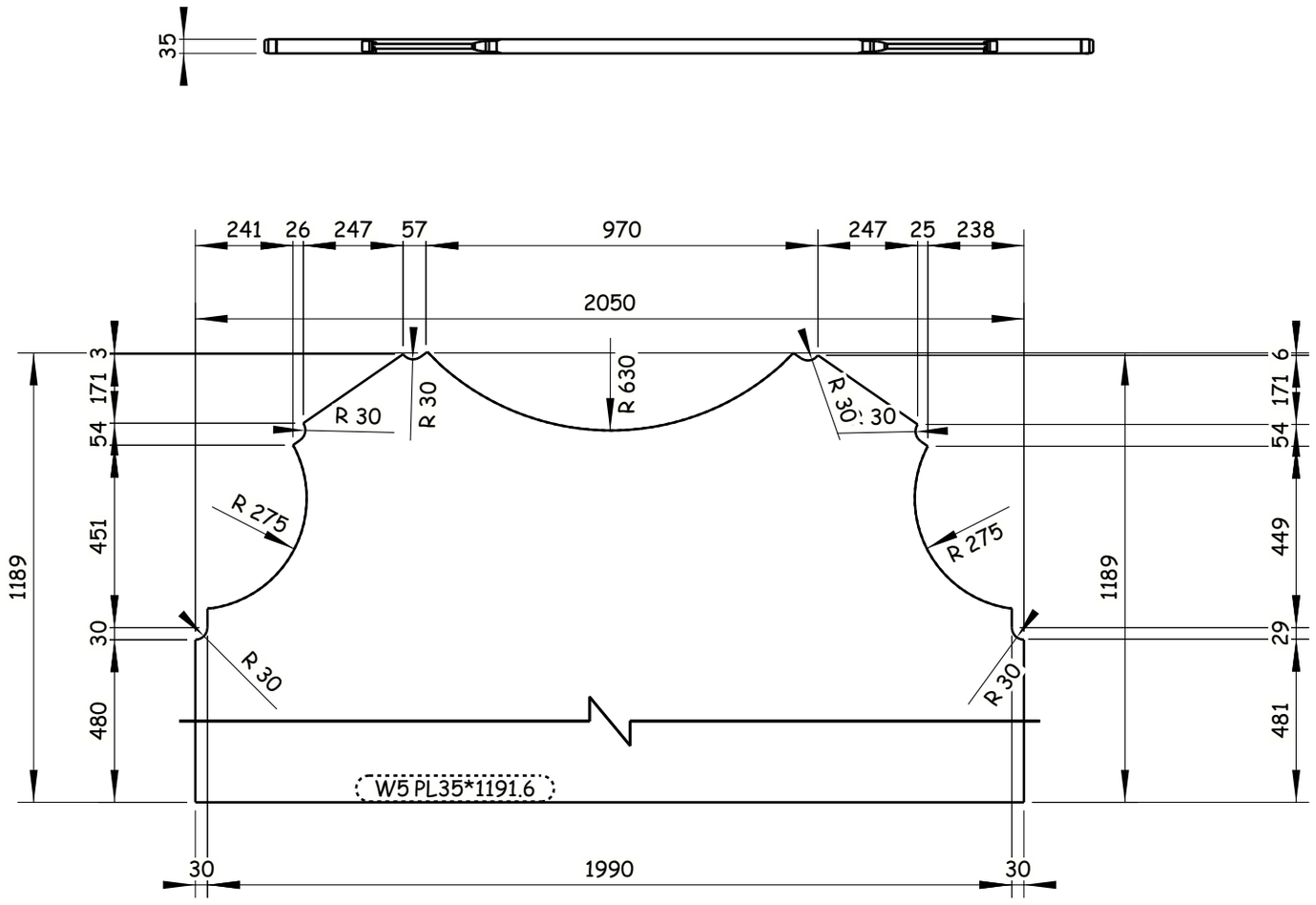

3 REQUIRED AS DRAWN E.SH W5

GENERAL NOTES:

1. ALL DIMENSIONS ARE IN MILLIMETERS UNLESS OTHERWISE SPECIFIED.
2. LEVELS ARE IN METERS
3. DESIGN SERVICE LIFE OF 100 YEARS.
4. FLANGES OF TOP AND BOTTOM CHORDS TO BE SUPPLIED WITH IMPROVED THROUGH THICKNESS PROPERTIES Z25 ACCORDING TO EN10164.

REFERENCE DRAWINGS

1	93M-0407-SEN-6OL11-END-10118-B PAGE 01:17
2	
3	
4	
5	
6	
7	
8	
9	
10	
11	

6TH OF OCTOBER CITY RAIL TRANSIT MONORAIL &
NEW CAPITAL CITY RAIL TRANSIT MONORAIL

The Authority
Hill International
Authority Consultant

ORASCOM CONSTRUCTION
Main Contractor

BOMBARDIER
SENER
SHAKER CONSULTANCY GROUP
Designer

CONTRACTOR & CONSULTANT:
ENGINEERING HOUSE FOR CONSULTANCY

SCALE: AS SHOWN | CHK'D DRAWING | DATE: 20.11.2024

REV	DATE	BY	DESCRIPTION	CHK	APD
A	20-11-24	E.SH	ISSUE FOR APPROVAL	A.SH	M.M

6 October Monorail
Engineering Unit
Valid For Construction

DRAWING TITLE:
6TH OF OCTOBER MONORAIL
SHOP DRAWING FOR BRIDGE 6OL11-37
STEEL TRUSS (II).
W5

Project Code	Rubric	Initiator	Lot	Ref	Number	Revision
9 3 M	0 4 0 7	A A C	6 0 L 1 1	D W G	90330	A

Tekla structures

-Drawing shall be updated according to the comments on the GA drawing.
-Approval is subjected to the approval of coordination package between multi-discipline.

REVIEWED WITH COMMENT
MONORAILS PROJECT

All holes are 22mm U.N.O Length & Area & Weight per piece

Mark	Profile	Grade	QTY	Length	Area	Weight
W6	PL20*518.1	S355J2N	8	774.0	0.85	62.7

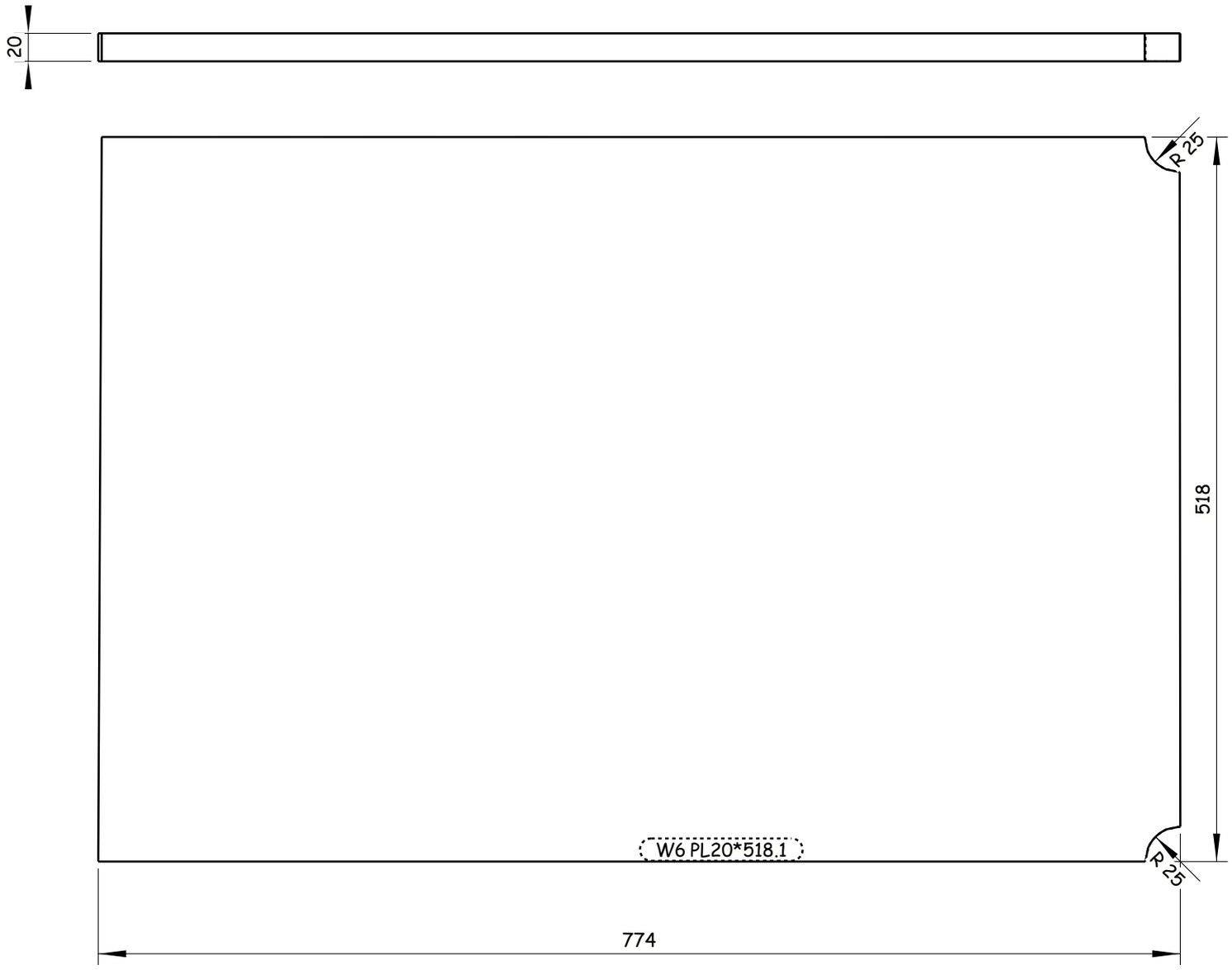

8 REQUIRED AS DRAWN E.SH W6

Tekla structures

GENERAL NOTES:
1. ALL DIMENSIONS ARE IN MILLIMETERS UNLESS OTHERWISE SPECIFIED.
2. LEVELS ARE IN METERS
3. DESIGN SERVICE LIFE OF 100 YEARS.
4. FLANGES OF TOP AND BOTTOM CHORDS TO BE SUPPLIED WITH IMPROVED THROUGH THICKNESS PROPERTIES Z25 ACCORDING TO EN10164.

REFERENCE DRAWINGS

1	93M-0407-SEN-6OL11-END-10118-B PAGE 01:17
2	
3	
4	
5	
6	
7	
8	
9	
10	
11	

6TH OF OCTOBER CITY RAIL TRANSIT MONORAIL &
NEW CAPITAL CITY RAIL TRANSIT MONORAIL

The Authority
Hill International
Authority Consultant

ORASCOM CONSTRUCTION
Main Contractor

BOMBARDIER
SENER
SHAKER CONSULTANCY GROUP
Designer

CONTRACTOR & CONSULTANT:
ENGINEERING HOUSE FOR CONSULTANCY

SCALE	CHK'D DRAWING	DATE
AS SHOWN		20.11.2024

REV	DATE	BY	DESCRIPTION	CHK	APD
A	20-11-24	E.SH	ISSUE FOR APPROVAL	A.SH	M.M

6 October Monorail
Engineering Unit
Valid For Construction

DRAWING TITLE:
6TH OF OCTOBER MONORAIL
SHOP DRAWING FOR BRIDGE 6OL11-37
STEEL TRUSS (II).
W6

Project Code	Rubric	Initiator	Lot	Ref	Number	Revision
93M	0407	AAC	60L11	DWG	90331	A

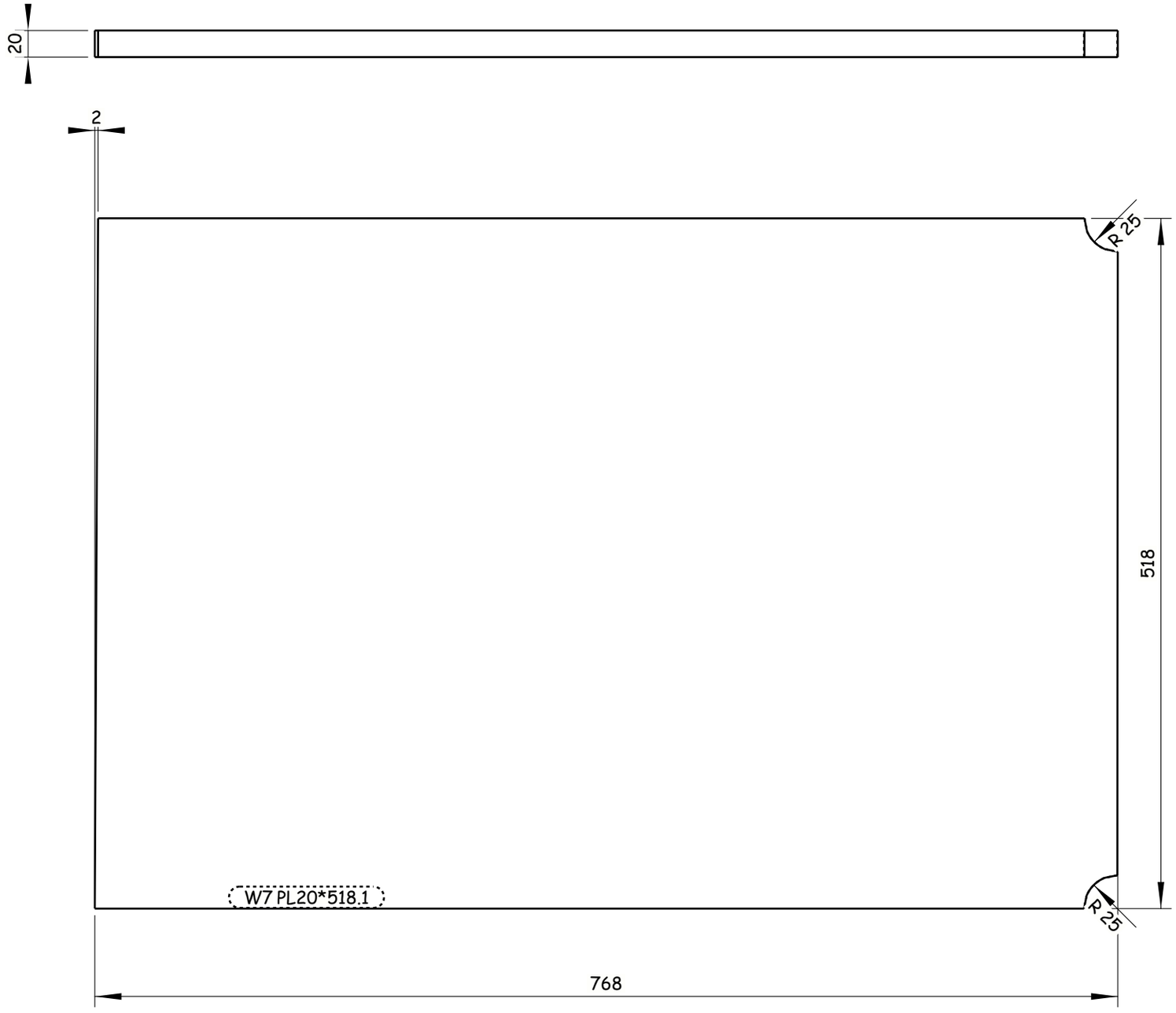

All holes are 22mm U.N.O Length & Area & Weight per piece						
W7	PL20*518.1	S355J2N	8	767.6	0.84	62.2
Mark	Profile	Grade	QTY	Length	Area	Weight

-Drawing shall be updated according to the comments on the GA drawing.
-Approval is subjected to the approval of coordination package between multi-discipline.

REVIEWED WITH COMMENT
MONORAILS PROJECT

8 REQUIRED AS DRAWN E.SH W7

Tekla structures

GENERAL NOTES:

1. ALL DIMENSIONS ARE IN MILLIMETERS UNLESS OTHERWISE SPECIFIED.
2. LEVELS ARE IN METERS
3. DESIGN SERVICE LIFE OF 100 YEARS.
4. FLANGES OF TOP AND BOTTOM CHORDS TO BE SUPPLIED WITH IMPROVED THROUGH THICKNESS PROPERTIES Z25 ACCORDING TO EN10164.

REFERENCE DRAWINGS

1	93M-0407-SEN-6OL11-END-10118-B PAGE 01:17
2	
3	
4	
5	
6	
7	
8	
9	
10	
11	

6TH OF OCTOBER CITY RAIL TRANSIT MONORAIL &
NEW CAPITAL CITY RAIL TRANSIT MONORAIL

The Authority
Hill International
Authority Consultant

ORASCOM CONSTRUCTION
BOMBARDIER
Main Contractor

SENER
SHAKER CONSULTANCY GROUP
Designer

CONTRACTOR / CONSULTANT :
ENGINEERING HOUSE FOR CONSULTANCY

SCALE
AS SHOWN

CHD DRAWING

DATE
20.11.2024

REV	DATE	BY	DESCRIPTION	CHK	APD
A	20-11-24	E.SH	ISSUE FOR APPROVAL	A.SH	M.M

6 October Monorail
Engineering Unit
Valid For Construction

DRAWING TITLE:
6TH OF OCTOBER MONORAIL
SHOP DRAWING FOR BRIDGE 6OL11-37
STEEL TRUSS (II).
W7

Project Code	Rubric	Initiator	Lot	Ref	Number	Revision
9 3 M	0 4 0 7	A A C	6 0 L 1 1	D W G	90332	A

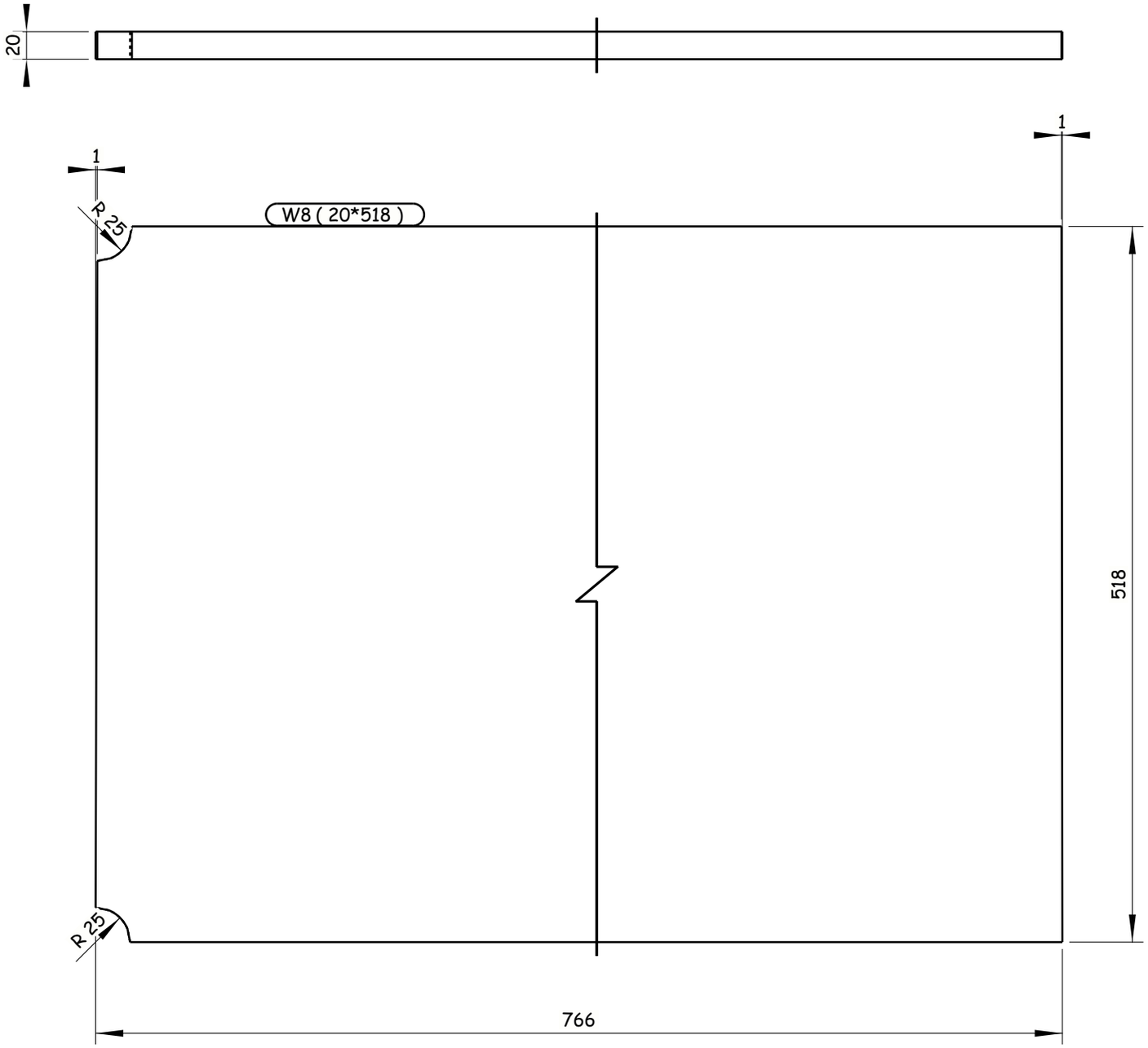

All holes are 22mm U.N.O Length & Area & Weight per piece						
W8	PL20*518	S355J2N	4	765.6	0.84	62.0
Mark	Profile	Grade	QTY	Length	Area	Weight

-Drawing shall be updated according to the comments on the GA drawing.
-Approval is subjected to the approval of coordination package between multi-discipline.

REVIEWED WITH COMMENT
MONORAILS PROJECT

4 REQUIRED AS DRAWN E.SH W8

Tekla structures

GENERAL NOTES:

1. ALL DIMENSIONS ARE IN MILLIMETERS UNLESS OTHERWISE SPECIFIED.
2. LEVELS ARE IN METERS
3. DESIGN SERVICE LIFE OF 100 YEARS.
4. FLANGES OF TOP AND BOTTOM CHORDS TO BE SUPPLIED WITH IMPROVED THROUGH THICKNESS PROPERTIES Z25 ACCORDING TO EN10164.

REFERENCE DRAWINGS

1	93M-0407-SEN-6OL11-END-10118-B PAGE 01:17
2	
3	
4	
5	
6	
7	
8	
9	
10	
11	

6TH OF OCTOBER CITY RAIL TRANSIT MONORAIL &
NEW CAPITAL CITY RAIL TRANSIT MONORAIL

The Authority — Hill International — Authority Consultant
ORASCOM CONSTRUCTION — Main Contractor
BOMBARDIER — SENER — SHAKER — Designer

CONTRACTOR / CONSULTANT :
ENGINEERING HOUSE FOR CONSULTANCY

6 October Monorail
Engineering Unit
Valid For Construction

SCALE	SHOP DRAWING	DATE
AS SHOWN		20.11.2024

REV	DATE	BY	DESCRIPTION	CHK	APD
A	20-11-24	E.SH	ISSUE FOR APPROVAL	A.SH	M.M

DRAWING TITLE:
6TH OF OCTOBER MONORAIL
SHOP DRAWING FOR BRIDGE 6OL11-37
STEEL TRUSS (II).
W8

Project Code	Rubric	Initiator	Lot	Ref	Number	Revision
93M	0407	AAC	60L11	DWG	90333	A

-Drawing shall be updated according to the comments on the GA drawing.
-Approval is subjected to the approval of coordination package between multi-discipline.

REVIEWED WITH COMMENT
MONORAILS PROJECT

All holes are 22mm U.N.O Length & Area & Weight per piece

Mark	Profile	Grade	QTY	Length	Area	Weight
W9	PL20*518.9	S355J2N	4	779.5	0.86	63.2

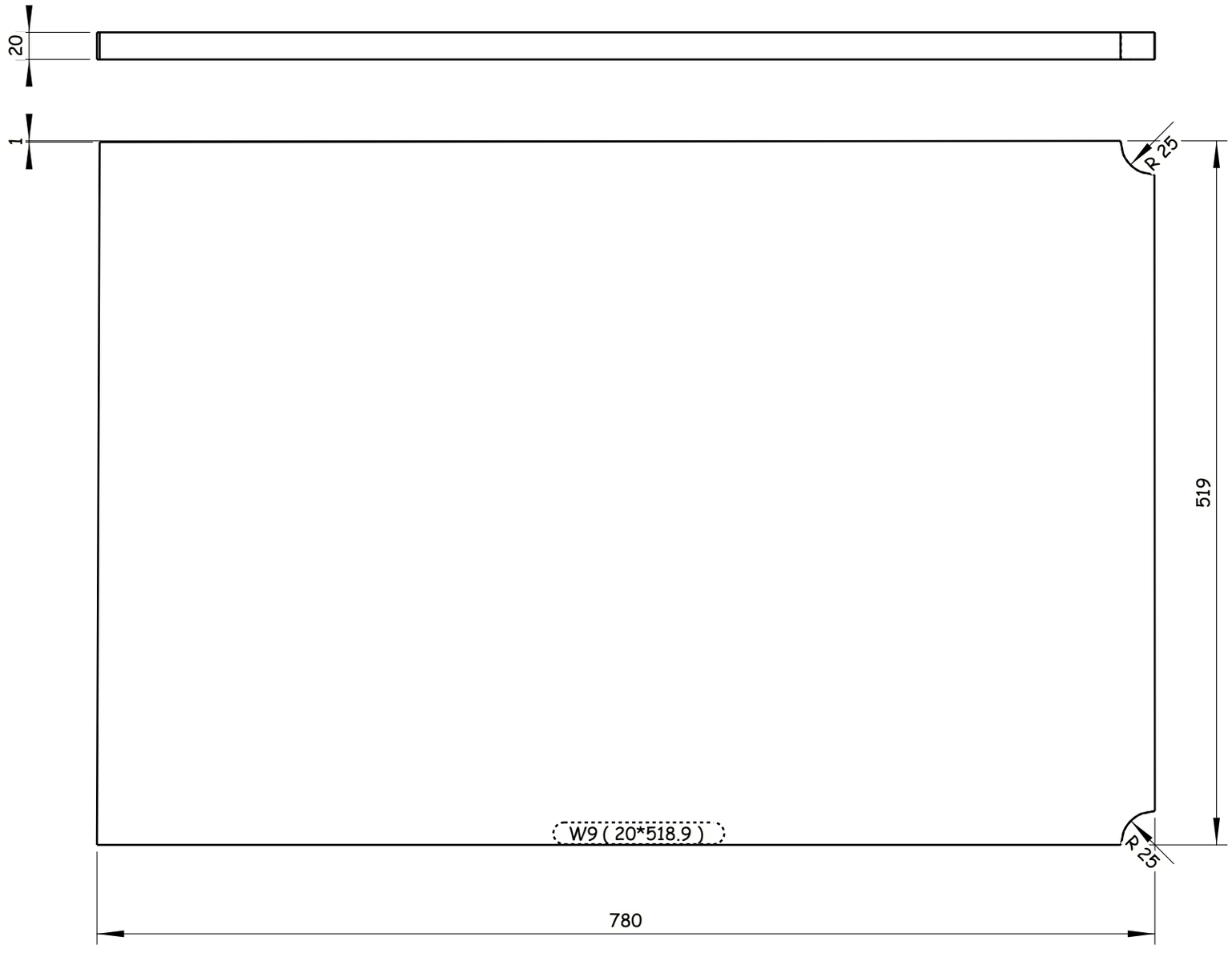

4 REQUIRED AS DRAWN E.SH W9

GENERAL NOTES:

1. ALL DIMENSIONS ARE IN MILLIMETERS UNLESS OTHERWISE SPECIFIED.
2. LEVELS ARE IN METERS
3. DESIGN SERVICE LIFE OF 100 YEARS.
4. FLANGES OF TOP AND BOTTOM CHORDS TO BE SUPPLIED WITH IMPROVED THROUGH THICKNESS PROPERTIES Z25 ACCORDING TO EN10164.

REFERENCE DRAWINGS

1	93M-0407-SEN-6OL11-END-10118-B PAGE 01:17
2	
3	
4	
5	
6	
7	
8	
9	
10	
11	

6TH OF OCTOBER CITY RAIL TRANSIT MONORAIL &
NEW CAPITAL CITY RAIL TRANSIT MONORAIL

The Authority
Hill International
Authority Consultant

Main Contractor

Designer

CONTRACTOR & CONSULTANT:
ENGINEERING HOUSE FOR CONSULTANCY

SCALE: AS SHOWN | CHK'D DRAWING | DATE: 20.11.2024

REV	DATE	BY	DESCRIPTION	CHK	APD
A	20-11-24	E.SH	ISSUE FOR APPROVAL	A.SH	M.M

6 October Monorail
Engineering Unit
Valid For Construction

DRAWING TITLE:
6TH OF OCTOBER MONORAIL
SHOP DRAWING FOR BRIDGE 6OL11-37
STEEL TRUSS (II).
W9

Project Code	Rubric	Initiator	Lot	Ref	Number	Revision
9 3 M	0 4 0 7	A A C	6 0 L 1 1	D W G	90334	A

Tekla structures

-Drawing shall be updated according to the comments on the GA drawing.
-Approval is subjected to the approval of coordination package between multi-discipline.

REVIEWED WITH COMMENT
MONORAILS PROJECT

All holes are 22mm U.N.O Length & Area & Weight per piece

Mark	Profile	Grade	QTY	Length	Area	Weight
W10	PL20*518	S355J2N	8	768.7	0.84	62.3

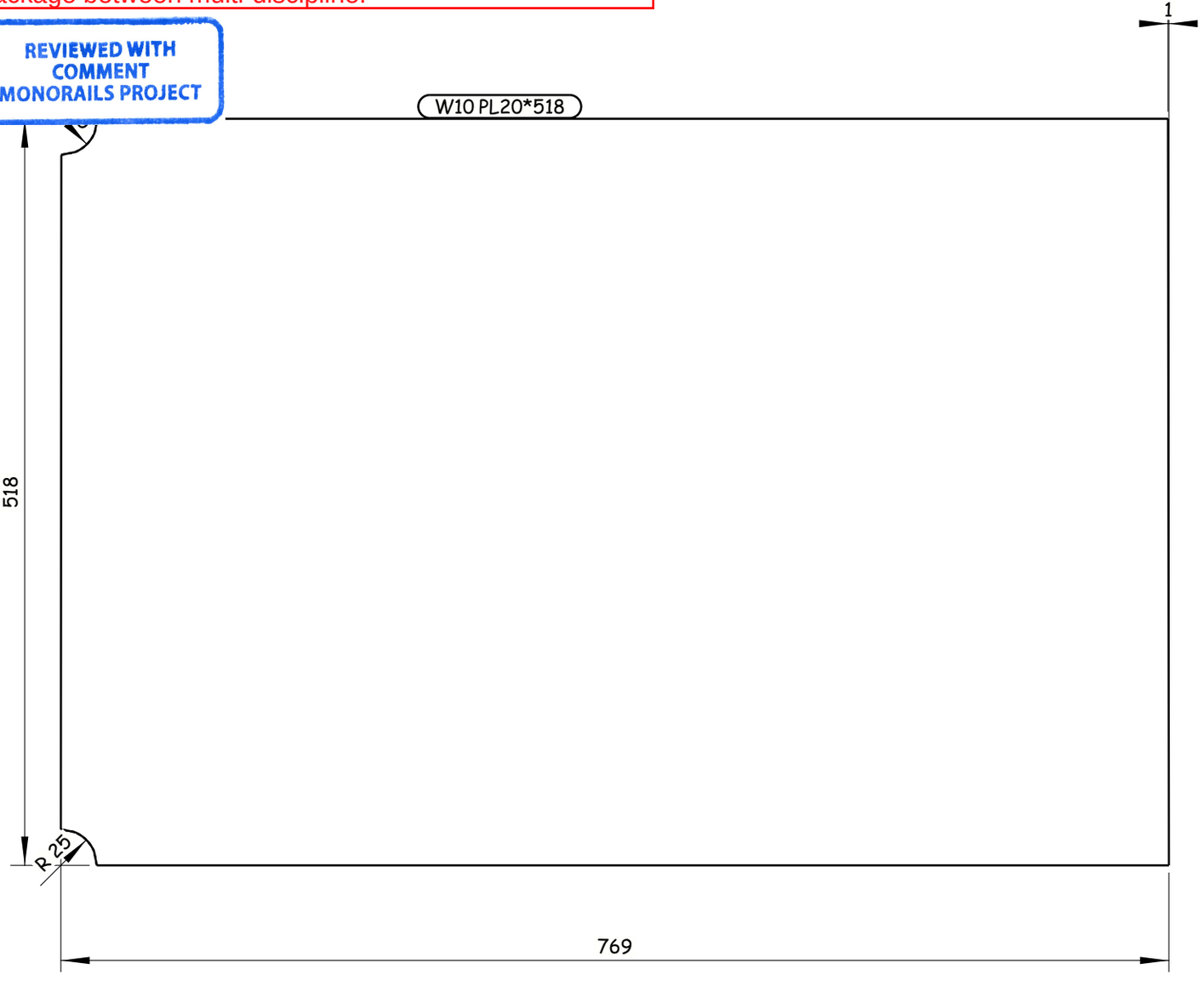

8 REQUIRED AS DRAWN E.SH W10

GENERAL NOTES:

1. ALL DIMENSIONS ARE IN MILLIMETERS UNLESS OTHERWISE SPECIFIED.
2. LEVELS ARE IN METERS
3. DESIGN SERVICE LIFE OF 100 YEARS.
4. FLANGES OF TOP AND BOTTOM CHORDS TO BE SUPPLIED WITH IMPROVED THROUGH THICKNESS PROPERTIES Z25 ACCORDING TO EN10164.

REFERENCE DRAWINGS

1	93M-0407-SEN-6OL11-END-10118-B PAGE 01:17
2	
3	
4	
5	
6	
7	
8	
9	
10	
11	

6TH OF OCTOBER CITY RAIL TRANSIT MONORAIL &
NEW CAPITAL CITY RAIL TRANSIT MONORAIL

The Authority
Hill International
Authority Consultant

Main Contractor

Designer

CONTRACTOR & CONSULTANT:
ENGINEERING HOUSE FOR CONSULTANCY

SCALE: AS SHOWN | CHK'D DRAWING | DATE: 20.11.2024

REV	DATE	BY	DESCRIPTION	CHK	APD
A	20-11-24	E.SH	ISSUE FOR APPROVAL	A.SH	M.M

6 October: Monorail
Engineering Unit
Valid For Construction

DRAWING TITLE:
6TH OF OCTOBER MONORAIL
SHOP DRAWING FOR BRIDGE 6OL11-37
STEEL TRUSS (II).
W10

Project Code	Rubric	Initiator	Lot	Ref	Number	Revision
93M	0407	AAC	60L11	DWG	90335	A

Tekla structures

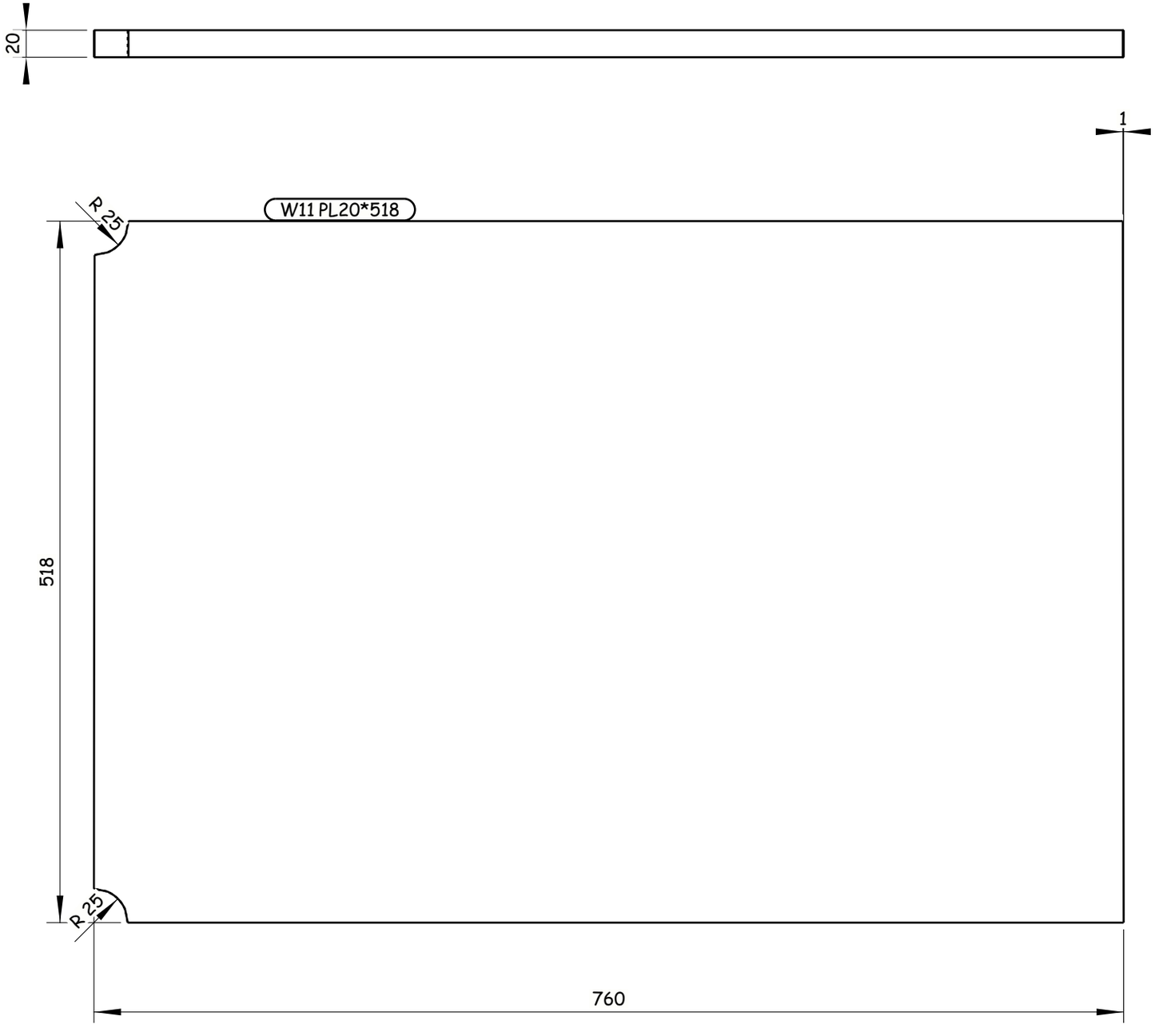

All holes are 22mm U.N.O Length & Area & Weight per piece						
W11	PL20*518	S355J2N	4	760.4	0.84	61.6
Mark	Profile	Grade	QTY	Length	Area	Weight

-Drawing shall be updated according to the comments on the GA drawing.
-Approval is subjected to the approval of coordination package between multi-discipline.

REVIEWED WITH COMMENT
MONORAILS PROJECT

4 REQUIRED AS DRAWN E.SH W11

GENERAL NOTES:

1. ALL DIMENSIONS ARE IN MILLIMETERS UNLESS OTHERWISE SPECIFIED.
2. LEVELS ARE IN METERS
3. DESIGN SERVICE LIFE OF 100 YEARS.
4. FLANGES OF TOP AND BOTTOM CHORDS TO BE SUPPLIED WITH IMPROVED THROUGH THICKNESS PROPERTIES Z25 ACCORDING TO EN10164.

REFERENCE DRAWINGS

1	93M-0407-SEN-6OL11-END-10118-B PAGE 01:17
2	
3	
4	
5	
6	
7	
8	
9	
10	
11	

6TH OF OCTOBER CITY RAIL TRANSIT MONORAIL &
NEW CAPITAL CITY RAIL TRANSIT MONORAIL

The Authority
Hill International
Authority Consultant

Main Contractor

Designer

CONTRACTOR & CONSULTANT:
ENGINEERING HOUSE FOR CONSULTANCY

SCALE: AS SHOWN | CHK DRAWING | DATE: 20.11.2024

REV	DATE	BY	DESCRIPTION	CHK	APD
A	20-11-24	E.SH	ISSUE FOR APPROVAL	A.SH	M.M

6 October Monorail
Engineering Unit
Valid For Construction

DRAWING TITLE:
6TH OF OCTOBER MONORAIL
SHOP DRAWING FOR BRIDGE 6OL11-37
STEEL TRUSS (II).
W11

Project Code	Rubric	Initiator	Lot	Ref	Number	Revision
9 3 M	0 4 0 7	A A C	6 0 L 1 1	D W G	90336	A

Tekla structures

-Drawing shall be updated according to the comments on the GA drawing.
-Approval is subjected to the approval of coordination package between multi-discipline.

REVIEWED WITH COMMENT
MONORAILS PROJECT

All holes are 22mm U.N.O Length & Area & Weight per piece

Mark	Profile	Grade	QTY	Length	Area	Weight
W12	PL20*518	S355J2N	4	772.2	0.85	62.5

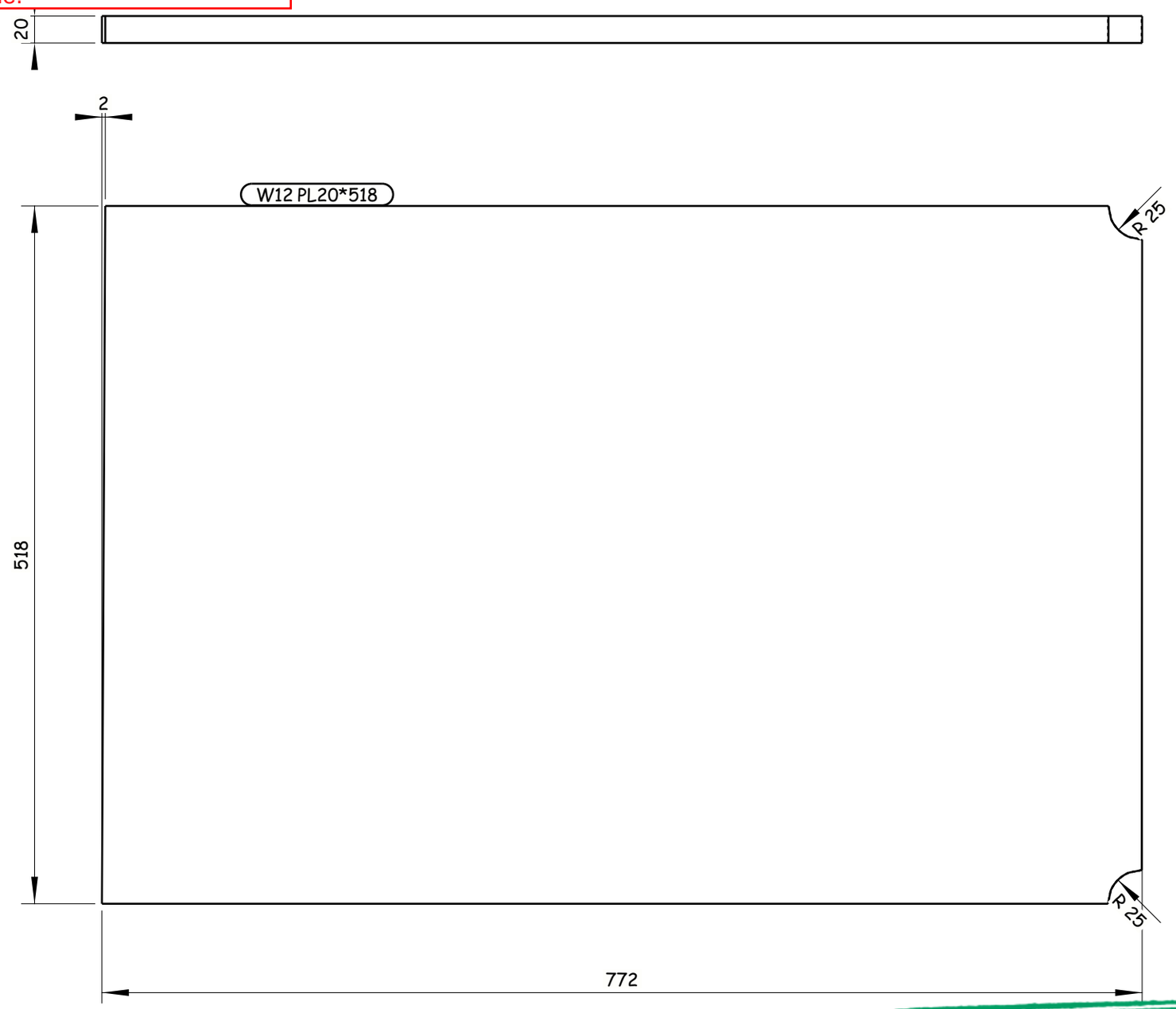

4 REQUIRED AS DRAWN E.SH W12

Tekla structures

GENERAL NOTES:

1. ALL DIMENSIONS ARE IN MILLIMETERS UNLESS OTHERWISE SPECIFIED.
2. LEVELS ARE IN METERS
3. DESIGN SERVICE LIFE OF 100 YEARS.
4. FLANGES OF TOP AND BOTTOM CHORDS TO BE SUPPLIED WITH IMPROVED THROUGH THICKNESS PROPERTIES Z25 ACCORDING TO EN10164.

REFERENCE DRAWINGS

1	93M-0407-SEN-6OL11-END-10118-B PAGE 01:17
2	
3	
4	
5	
6	
7	
8	
9	
10	
11	

6TH OF OCTOBER CITY RAIL TRANSIT MONORAIL &
NEW CAPITAL CITY RAIL TRANSIT MONORAIL

The Authority — Hill International — Authority Consultant
Main Contractor
Designer

CONTRACTOR & CONSULTANT:
ENGINEERING HOUSE FOR CONSULTANCY

6 October Monorail
Engineering Unit
Valid For Construction

SCALE	SHOP DRAWING	DATE
AS SHOWN		20.11.2024

DRAWING TITLE:
6TH OF OCTOBER MONORAIL
SHOP DRAWING FOR BRIDGE 6OL11-37
STEEL TRUSS (II).
W12

REV	DATE	BY	DESCRIPTION	CHK	APD
A	20-11-24	E.SH	ISSUE FOR APPROVAL	A.SH	M.M

Project Code	Rubric	Initiator	Lot	Ref	Number	Revision
93M	0407	AAC	60L11	DWG	90337	A

-Drawing shall be updated according to the comments on the GA drawing.
-Approval is subjected to the approval of coordination package between multi-discipline.

REVIEWED WITH COMMENT
MONORAILS PROJECT

All holes are 22mm U.N.O Length & Area & Weight per piece

Mark	Profile	Grade	QTY	Length	Area	Weight
W13	PL20*518	S355J2N	4	776.1	0.85	62.9

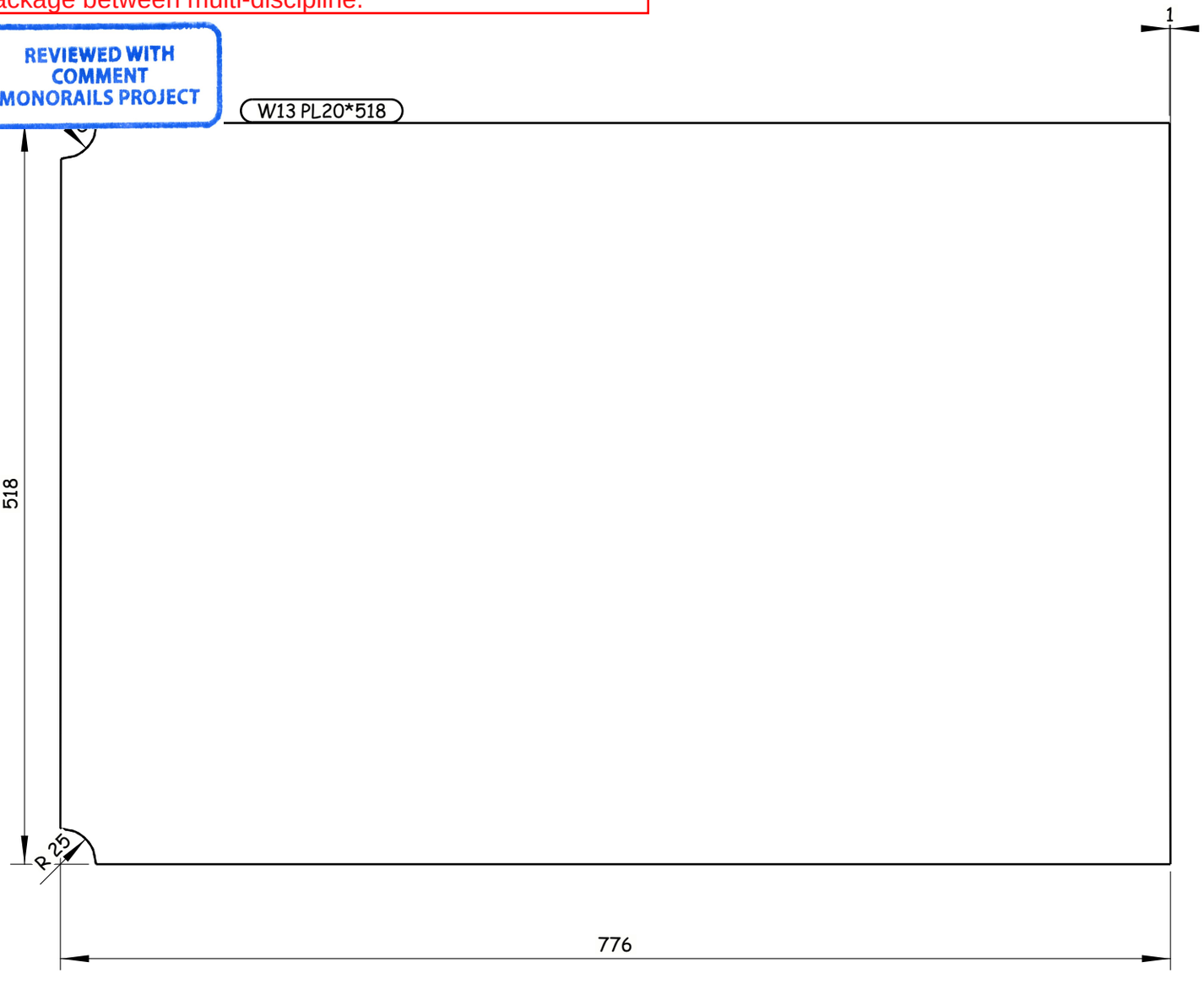

4 REQUIRED AS DRAWN E.SH W13

Tekla structures

GENERAL NOTES:

1. ALL DIMENSIONS ARE IN MILLIMETERS UNLESS OTHERWISE SPECIFIED.
2. LEVELS ARE IN METERS
3. DESIGN SERVICE LIFE OF 100 YEARS.
4. FLANGES OF TOP AND BOTTOM CHORDS TO BE SUPPLIED WITH IMPROVED THROUGH THICKNESS PROPERTIES Z25 ACCORDING TO EN10164.

REFERENCE DRAWINGS

1	93M-0407-SEN-6OL11-END-10118-B PAGE 01:17
2	
3	
4	
5	
6	
7	
8	
9	
10	
11	

6TH OF OCTOBER CITY RAIL TRANSIT MONORAIL &
NEW CAPITAL CITY RAIL TRANSIT MONORAIL

The Authority
Hill International
Authority Consultant

ORASCOM CONSTRUCTION
Main Contractor

BOMBARDIER
SENER
SHAKER CONSULTANCY GROUP
Designer

CONTRACTOR & CONSULTANT:
ENGINEERING HOUSE FOR CONSULTANCY

SCALE: AS SHOWN
CHK DRAWING
DATE: 20.11.2024

REV	DATE	BY	DESCRIPTION	CHK	APD
A	20-11-24	E.SH	ISSUE FOR APPROVAL	A.SH	M.M

6 October: Monorail
Engineering Unit
Valid For Construction

DRAWING TITLE:
6TH OF OCTOBER MONORAIL
SHOP DRAWING FOR BRIDGE 6OL11-37
STEEL TRUSS (II).
W13

Project Code	Rubric	Initiator	Lot	Ref	Number	Revision
93M	0407	AAC	60L11	DWG	90338	A

-Drawing shall be updated according to the comments on the GA drawing.
-Approval is subjected to the approval of coordination package between multi-discipline.

REVIEWED WITH COMMENT
MONORAILS PROJECT

All holes are 22mm U.N.O Length & Area & Weight per piece

Mark	Profile	Grade	QTY	Length	Area	Weight
W14	PL20*518	S355J2N	4	764.3	0.84	61.9

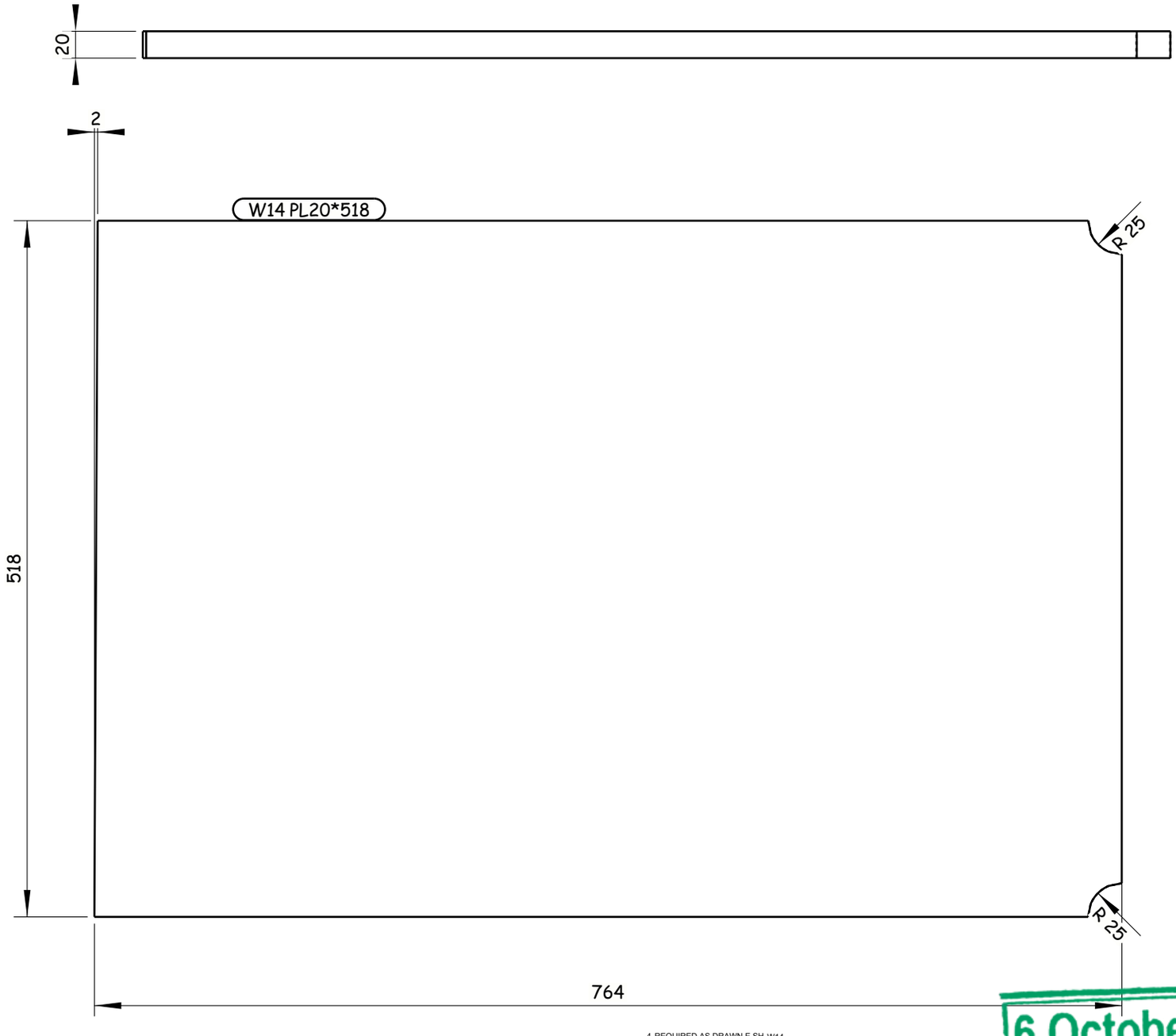

4 REQUIRED AS DRAWN E.SH W14

GENERAL NOTES:

1. ALL DIMENSIONS ARE IN MILLIMETERS UNLESS OTHERWISE SPECIFIED.
2. LEVELS ARE IN METERS
3. DESIGN SERVICE LIFE OF 100 YEARS.
4. FLANGES OF TOP AND BOTTOM CHORDS TO BE SUPPLIED WITH IMPROVED THROUGH THICKNESS PROPERTIES Z25 ACCORDING TO EN10164.

REFERENCE DRAWINGS

1	93M-0407-SEN-6OL11-END-10118-B PAGE 01:17
2	
3	
4	
5	
6	
7	
8	
9	
10	
11	

6TH OF OCTOBER CITY RAIL TRANSIT MONORAIL &
NEW CAPITAL CITY RAIL TRANSIT MONORAIL

The Authority
Hill International
Authority Consultant

Main Contractor

Designer

CONTRACTOR & CONSULTANT:
ENGINEERING HOUSE FOR CONSULTANCY

SCALE: AS SHOWN | CHK'D DRAWING | DATE: 20.11.2024

REV	DATE	BY	DESCRIPTION	CHK	APD
A	20-11-24	E.SH	ISSUE FOR APPROVAL	A.SH	M.M

6 October: Monorail
Engineering Unit
Valid For Construction

DRAWING TITLE:
6TH OF OCTOBER MONORAIL
SHOP DRAWING FOR BRIDGE 6OL11-37
STEEL TRUSS (II).
W14

Project Code	Rubric	Initiator	Lot	Ref	Number	Revision
9 3 M	0 4 0 7	A A C	6 0 L 1 1	D W G	90339	A

Tekla structures

-Drawing shall be updated according to the comments on the GA drawing.
-Approval is subjected to the approval of coordination package between multi-discipline.

REVIEWED WITH COMMENT
MONORAILS PROJECT

All holes are 22mm U.N.O Length & Area & Weight per piece

Mark	Profile	Grade	QTY	Length	Area	Weight
W15	PL20*548.1	S355J2N	4	781.1	0.91	66.9

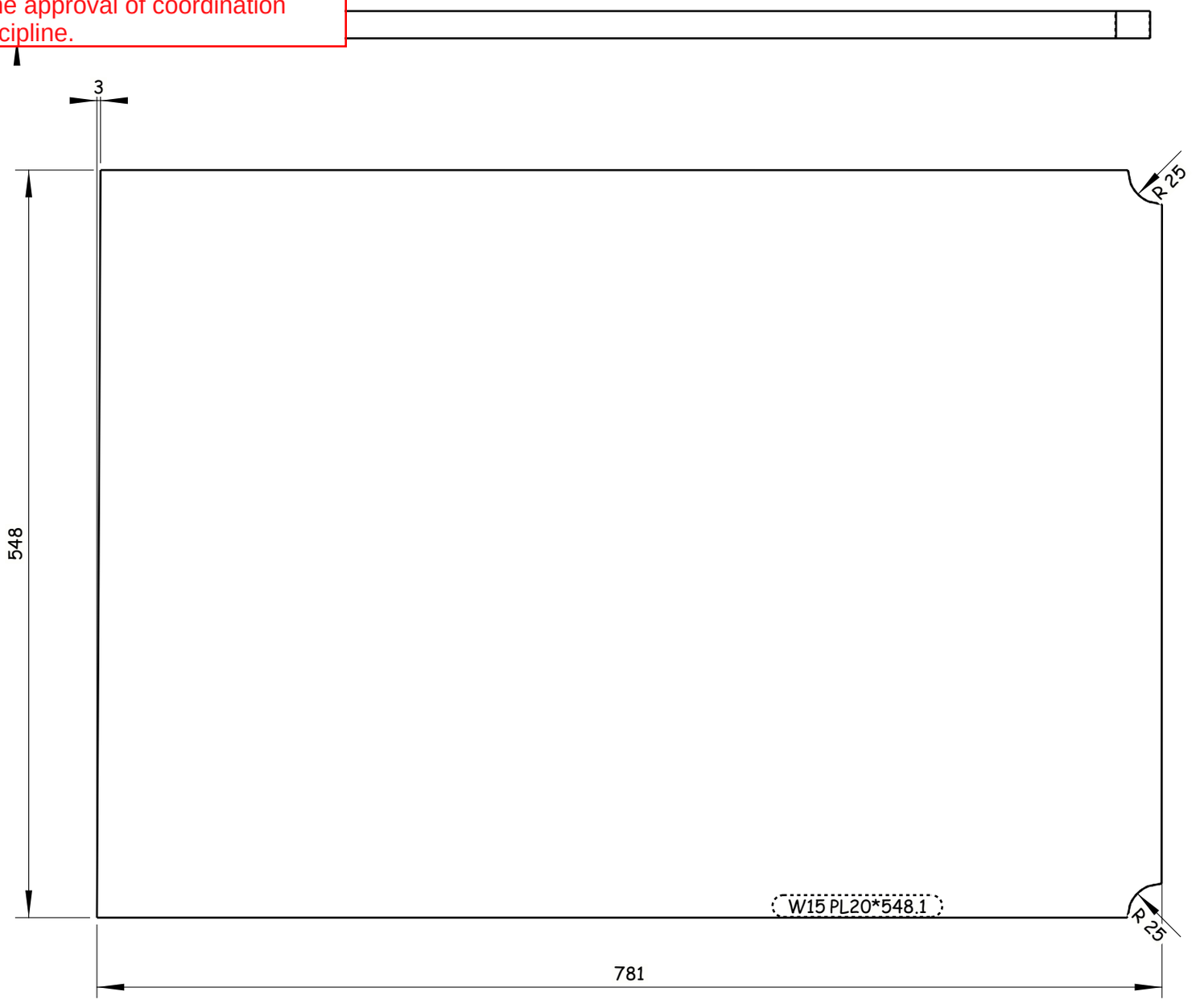

4 REQUIRED AS DRAWN E.SH W15

GENERAL NOTES:

1. ALL DIMENSIONS ARE IN MILLIMETERS UNLESS OTHERWISE SPECIFIED.
2. LEVELS ARE IN METERS
3. DESIGN SERVICE LIFE OF 100 YEARS.
4. FLANGES OF TOP AND BOTTOM CHORDS TO BE SUPPLIED WITH IMPROVED THROUGH THICKNESS PROPERTIES Z25 ACCORDING TO EN10164.

REFERENCE DRAWINGS

1	93M-0407-SEN-6OL11-END-10118-B PAGE 01:17
2	
3	
4	
5	
6	
7	
8	
9	
10	
11	

6TH OF OCTOBER CITY RAIL TRANSIT MONORAIL &
NEW CAPITAL CITY RAIL TRANSIT MONORAIL

The Authority
Hill International
Authority Consultant

Main Contractor

Designer

CONTRACTOR & CONSULTANT:
ENGINEERING HOUSE FOR CONSULTANCY

SCALE: AS SHOWN | CHK'D DRAWING | DATE: 20.11.2024

REV	DATE	BY	DESCRIPTION	CHK	APD
A	20-11-24	E.SH	ISSUE FOR APPROVAL	A.SH	M.M

6 October Monorail
Engineering Unit
Valid For Construction

DRAWING TITLE:
6TH OF OCTOBER MONORAIL
SHOP DRAWING FOR BRIDGE 6OL11-37
STEEL TRUSS (II).
W15

Project Code	Rubric	Initiator	Lot	Ref	Number	Revision
93M	0407	AAC	60L11	DWG	90340	A

Tekla structures

-Drawing shall be updated according to the comments on the GA drawing.
-Approval is subjected to the approval of coordination package between multi-discipline.

All holes are 22mm U.N.O Length & Area & Weight per piece						
W16	PL20*548	S355J2N	12	767.3	0.89	65.8
Mark	Profile	Grade	QTY	Length	Area	Weight

REVIEWED WITH COMMENT
MONORAILS PROJECT

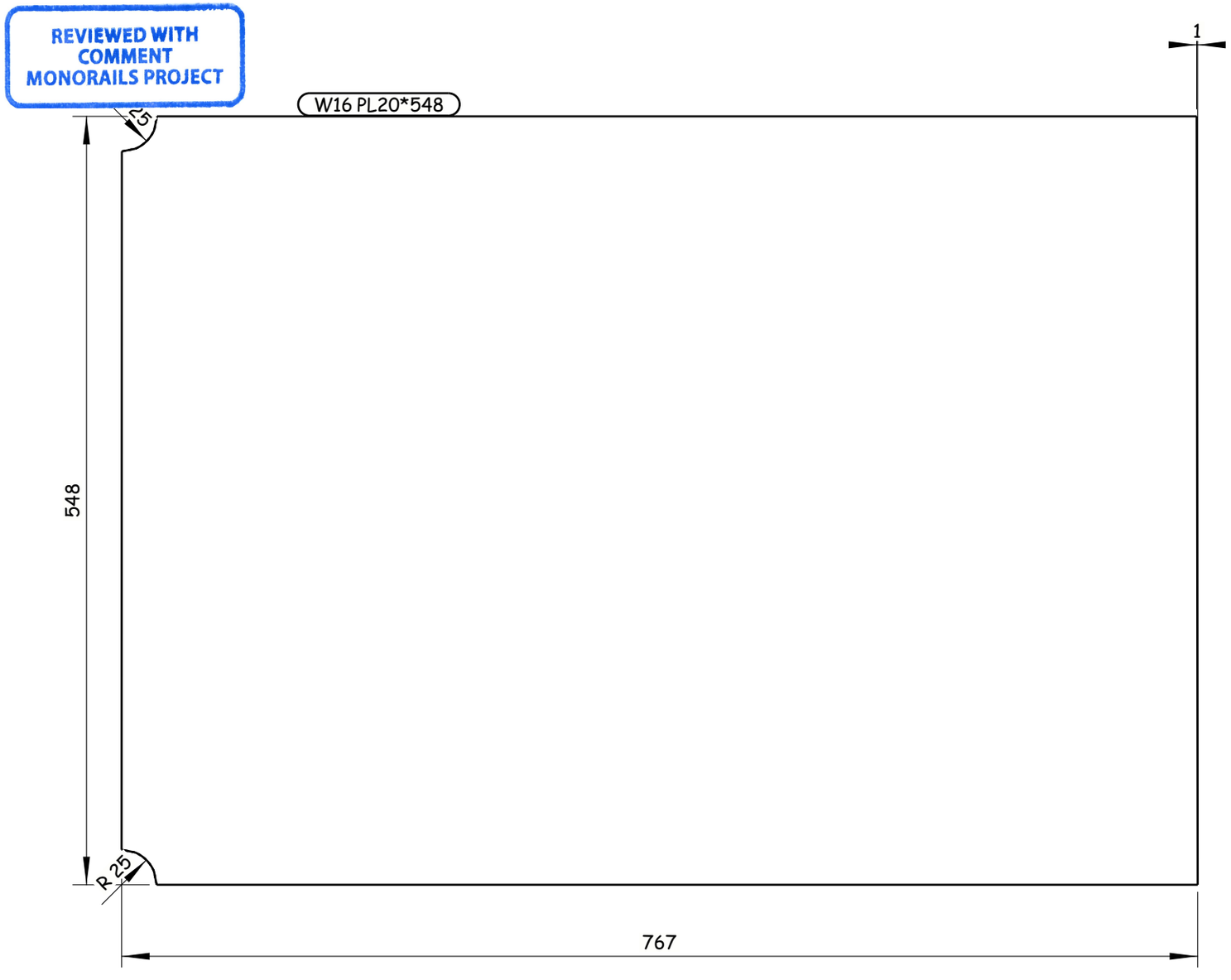

12 REQUIRED AS DRAWN E.SH W16

GENERAL NOTES:

1. ALL DIMENSIONS ARE IN MILLIMETERS UNLESS OTHERWISE SPECIFIED.
2. LEVELS ARE IN METERS
3. DESIGN SERVICE LIFE OF 100 YEARS.
4. FLANGES OF TOP AND BOTTOM CHORDS TO BE SUPPLIED WITH IMPROVED THROUGH THICKNESS PROPERTIES Z25 ACCORDING TO EN10164.

REFERENCE DRAWINGS

1	93M-0407-SEN-6OL11-END-10118-B PAGE 01:17
2	
3	
4	
5	
6	
7	
8	
9	
10	
11	

6TH OF OCTOBER CITY RAIL TRANSIT MONORAIL &
NEW CAPITAL CITY RAIL TRANSIT MONORAIL

The Authority
Hill International
Authority Consultant

Main Contractor

Designer

CONTRACTOR & CONSULTANT:
ENGINEERING HOUSE FOR CONSULTANCY

SCALE: AS SHOWN | CHK'D DRAWING | DATE: 20.11.2024

REV	DATE	BY	DESCRIPTION	CHK	APD
A	20-11-24	E.SH	ISSUE FOR APPROVAL	A.SH	M.M

6 October: Monorail
Engineering Unit
Valid For Construction

DRAWING TITLE:
6TH OF OCTOBER MONORAIL
SHOP DRAWING FOR BRIDGE 6OL11-37
STEEL TRUSS (II).
W16

Project Code	Rubric	Initiator	Lot	Ref	Number	Revision
93M	0407	AAC	60L11	DWG	90341	A

Tekla structures

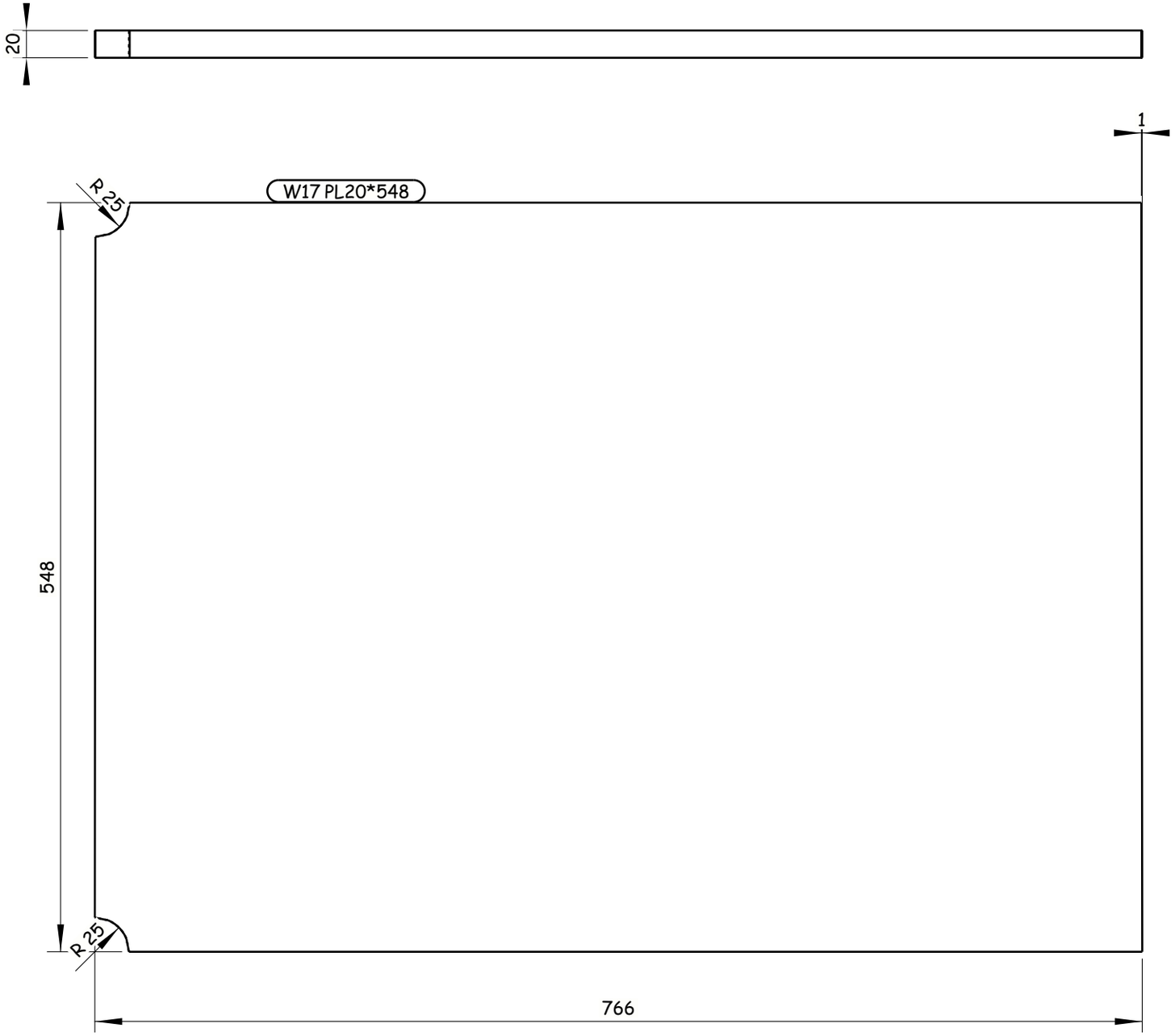

All holes are 22mm U.N.O Length & Area & Weight per piece						
W17	PL20*548	S355J2N	8	766.1	0.89	65.7
Mark	Profile	Grade	QTY	Length	Area	Weight

-Drawing shall be updated according to the comments on the GA drawing.
-Approval is subjected to the approval of coordination package between multi-discipline.

REVIEWED WITH COMMENT
MONORAILS PROJECT

8 REQUIRED AS DRAWN E.SH W17

Tekla structures

GENERAL NOTES:

1. ALL DIMENSIONS ARE IN MILLIMETERS UNLESS OTHERWISE SPECIFIED.
2. LEVELS ARE IN METERS
3. DESIGN SERVICE LIFE OF 100 YEARS.
4. FLANGES OF TOP AND BOTTOM CHORDS TO BE SUPPLIED WITH IMPROVED THROUGH THICKNESS PROPERTIES Z25 ACCORDING TO EN10164.

REFERENCE DRAWINGS

1	93M-0407-SEN-6OL11-END-10118-B PAGE 01:17
2	
3	
4	
5	
6	
7	
8	
9	
10	
11	

6TH OF OCTOBER CITY RAIL TRANSIT MONORAIL &
NEW CAPITAL CITY RAIL TRANSIT MONORAIL

The Authority
Hill International
Authority Consultant

Main Contractor

Designer

CONTRACTOR & CONSULTANT:
ENGINEERING HOUSE FOR CONSULTANCY

6 October Monorail
Engineering Unit
Valid For Construction

SCALE	SHOP DRAWING	DATE
AS SHOWN		20.11.2024

DRAWING TITLE:
6TH OF OCTOBER MONORAIL
SHOP DRAWING FOR BRIDGE 6OL11-37
STEEL TRUSS (II).
W17

REV	DATE	BY	DESCRIPTION	CHK	APD
A	20-11-24	E.SH	ISSUE FOR APPROVAL	A.SH	M.M

Project Code	Rubric	Initiator	Lot	Ref	Number	Revision
93M	0407	AAC	6OL11	DWG	90342	A

-Drawing shall be updated according to the comments on the GA drawing.
-Approval is subjected to the approval of coordination package between multi-discipline.

REVIEWED WITH COMMENT
MONORAILS PROJECT

All holes are 22mm U.N.O Length & Area & Weight per piece

Mark	Profile	Grade	QTY	Length	Area	Weight
W18	PL20*548	S355J2N	4	775.3	0.90	66.5

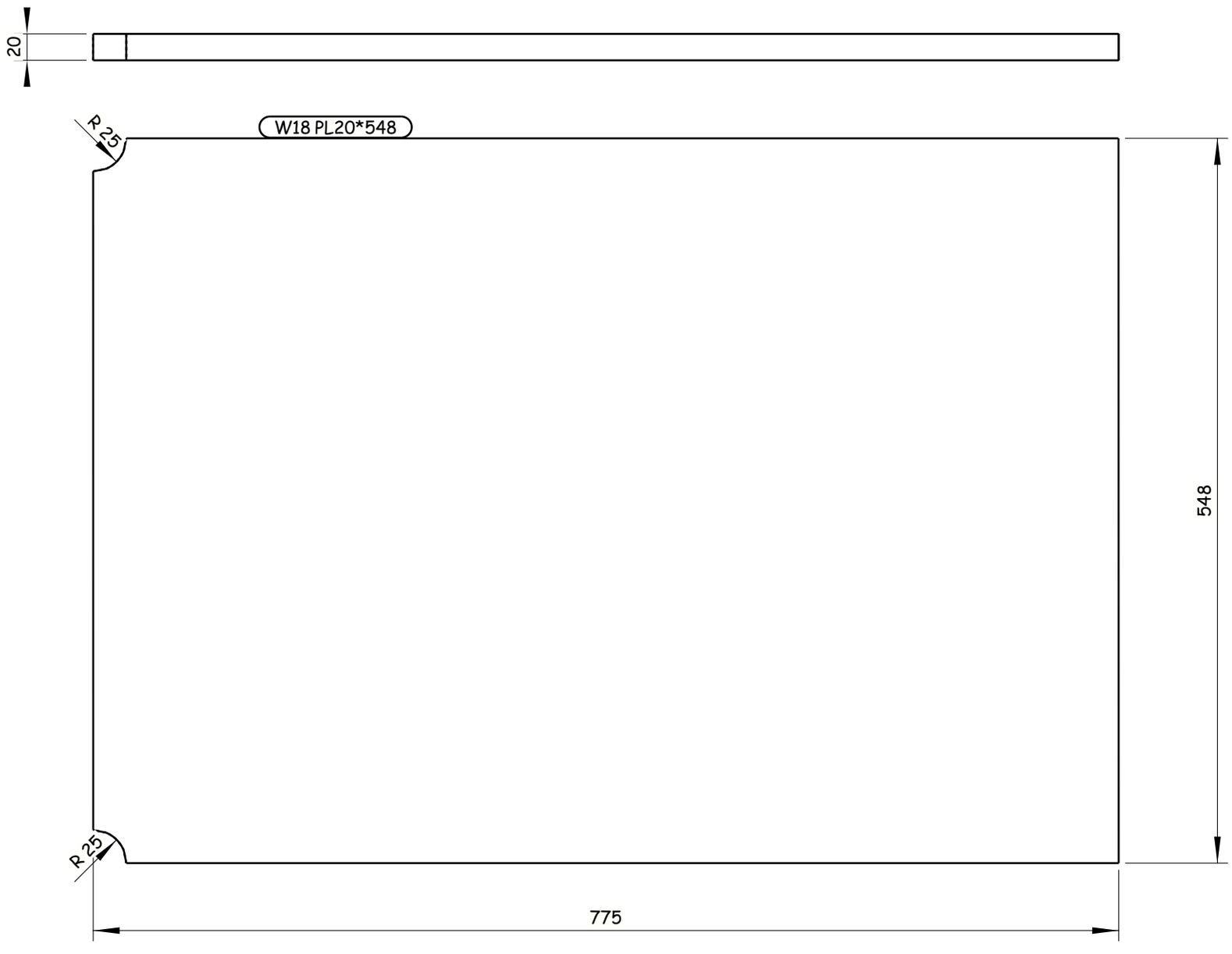

4 REQUIRED AS DRAWN E.SH W18

6 October: Monorail
Engineering Unit
Valid For Construction

Tekla structures

GENERAL NOTES:

1. ALL DIMENSIONS ARE IN MILLIMETERS UNLESS OTHERWISE SPECIFIED.
2. LEVELS ARE IN METERS
3. DESIGN SERVICE LIFE OF 100 YEARS.
4. FLANGES OF TOP AND BOTTOM CHORDS TO BE SUPPLIED WITH IMPROVED THROUGH THICKNESS PROPERTIES Z25 ACCORDING TO EN10164.

REFERENCE DRAWINGS

1	93M-0407-SEN-6OL11-END-10118-B PAGE 01:17
2	
3	
4	
5	
6	
7	
8	
9	
10	
11	

6TH OF OCTOBER CITY RAIL TRANSIT MONORAIL &
NEW CAPITAL CITY RAIL TRANSIT MONORAIL

The Authority — Authority Consultant
Hill International
ORASCOM CONSTRUCTION — Main Contractor
BOMBARDIER
SENER
SHAKER CONSULTANCY GROUP — Designer

CONTRACTOR & CONSULTANT:
ENGINEERING HOUSE FOR CONSULTANCY

SCALE: AS SHOWN | CHK'D DRAWING | DATE: 20.11.2024

REV	DATE	BY	DESCRIPTION	CHK	APD
A	20-11-24	E.SH	ISSUE FOR APPROVAL	A.SH	M.M

DRAWING TITLE:
6TH OF OCTOBER MONORAIL
SHOP DRAWING FOR BRIDGE 6OL11-37
STEEL TRUSS (II).
W18

Project Code	Rubric	Initiator	Lot	Ref	Number	Revision
9 3 M	0 4 0 7	A A C	6 0 L 1 1	D W G	90343	A

-Drawing shall be updated according to the comments on the GA drawing.
-Approval is subjected to the approval of coordination package between multi-discipline.

REVIEWED WITH COMMENT
MONORAILS PROJECT

All holes are 22mm U.N.O Length & Area & Weight per piece

Mark	Profile	Grade	QTY	Length	Area	Weight
W19	PL20*548	S355J2N	4	773.2	0.90	66.3

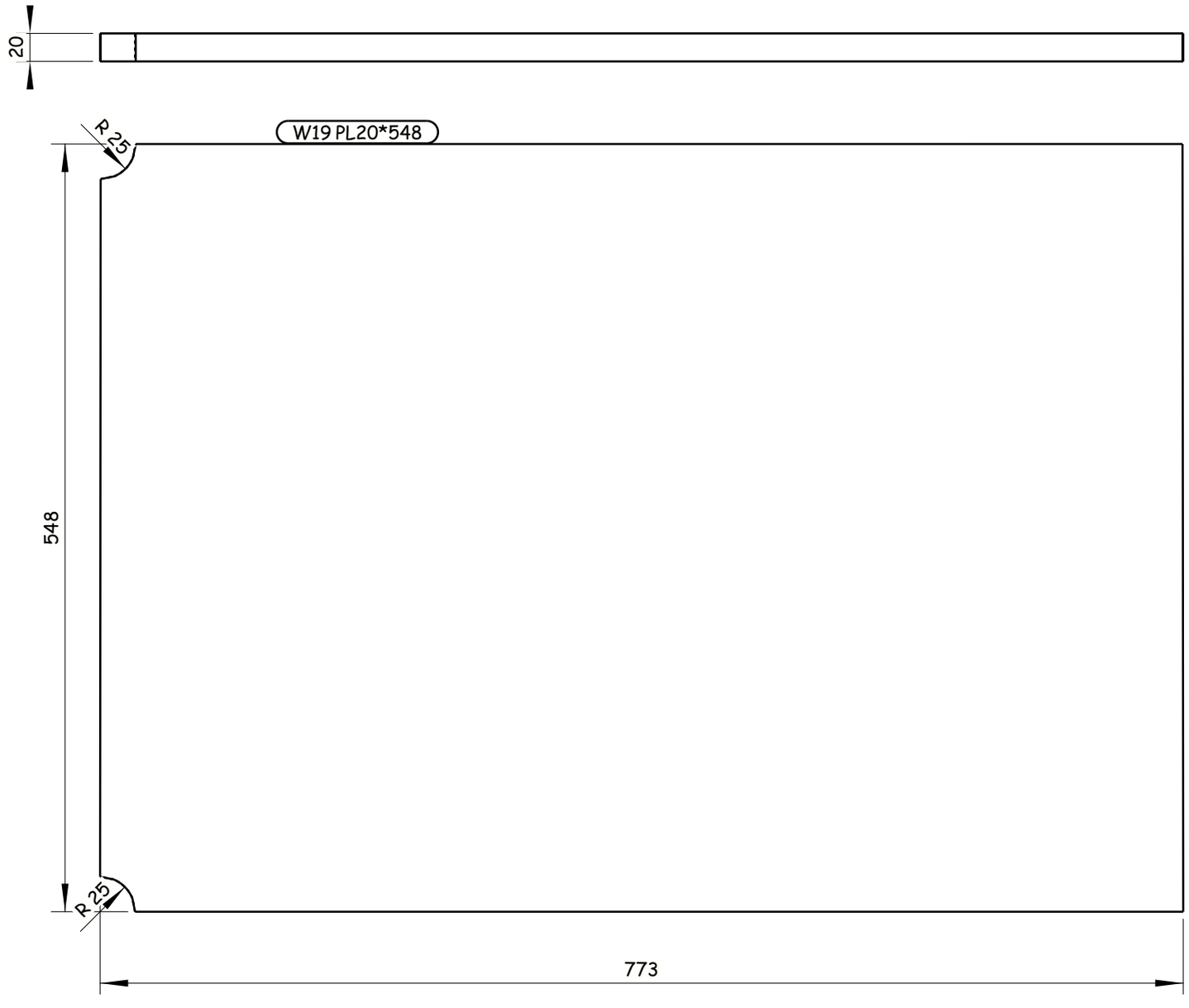

4 REQUIRED AS DRAWN E.SH W19

Tekla structures

GENERAL NOTES:

1. ALL DIMENSIONS ARE IN MILLIMETERS UNLESS OTHERWISE SPECIFIED.
2. LEVELS ARE IN METERS
3. DESIGN SERVICE LIFE OF 100 YEARS.
4. FLANGES OF TOP AND BOTTOM CHORDS TO BE SUPPLIED WITH IMPROVED THROUGH THICKNESS PROPERTIES Z25 ACCORDING TO EN10164.

REFERENCE DRAWINGS

1	93M-0407-SEN-6OL11-END-10118-B PAGE 01:17
2	
3	
4	
5	
6	
7	
8	
9	
10	
11	

6TH OF OCTOBER CITY RAIL TRANSIT MONORAIL &
NEW CAPITAL CITY RAIL TRANSIT MONORAIL

The Authority
Hill International
Authority Consultant

Main Contractor

Designer

CONTRACTOR & CONSULTANT:
ENGINEERING HOUSE FOR CONSULTANCY

SCALE: AS SHOWN | CHK'D DRAWING | DATE: 20.11.2024

REV	DATE	BY	DESCRIPTION	CHK	APD
A	20-11-24	E.SH	ISSUE FOR APPROVAL	A.SH	M.M

6 October: Monorail
Engineering Unit
Valid For Construction

DRAWING TITLE:
6TH OF OCTOBER MONORAIL
SHOP DRAWING FOR BRIDGE 6OL11-37
STEEL TRUSS (II).
W19

Project Code	Rubric	Initiator	Lot	Ref	Number	Revision
9 3 M	0 4 0 7	A A C	6 0 L 1 1	D W G	90344	A

-Drawing shall be updated according to the comments on the GA drawing.
-Approval is subjected to the approval of coordination package between multi-discipline.

REVIEWED WITH COMMENT
MONORAILS PROJECT

All holes are 22mm U.N.O Length & Area & Weight per piece						
W20	PL35*1206.4	S355J2N	1	2050.9	4.17	542.1
Mark	Profile	Grade	QTY	Length	Area	Weight

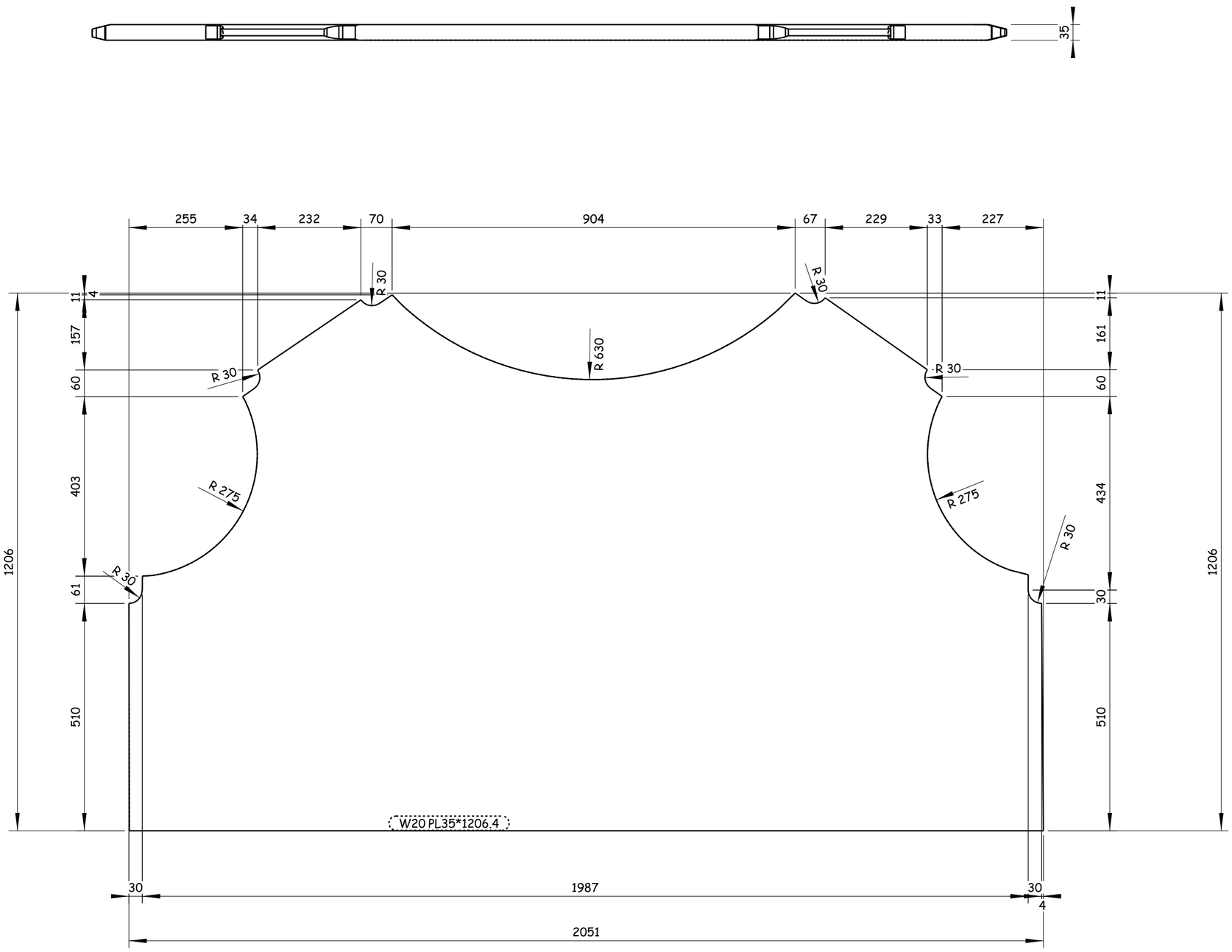

1 REQUIRED AS DRAWN E.SH W20

GENERAL NOTES:

1. ALL DIMENSIONS ARE IN MILLIMETERS UNLESS OTHERWISE SPECIFIED.
2. LEVELS ARE IN METERS
3. DESIGN SERVICE LIFE OF 100 YEARS.
4. FLANGES OF TOP AND BOTTOM CHORDS TO BE SUPPLIED WITH IMPROVED THROUGH THICKNESS PROPERTIES Z25 ACCORDING TO EN10164.

REFERENCE DRAWINGS

1	93M-0407-SEN-6OL11-END-10118-B PAGE 01:17
2	
3	
4	
5	
6	
7	
8	
9	
10	
11	

6TH OF OCTOBER CITY RAIL TRANSIT MONORAIL &
NEW CAPITAL CITY RAIL TRANSIT MONORAIL

The Authority — Hill International — Authority Consultant
ORASCOM CONSTRUCTION — Main Contractor
BOMBARDIER — SENER — SHAKER CONSULTANCY GROUP — Designer

CONTRACTOR:
CONSULTANT:
ENGINEERING HOUSE FOR CONSULTANCY

SCALE		DRAWING	DATE
AS SHOWN		SHOP DRAWING	20.11.2024

REV	DATE	BY	DESCRIPTION	CHK	APD
A	20-11-24	E.SH	ISSUE FOR APPROVAL	A.SH	M.M

6 October Monorail
Engineering Unit
Valid For Construction

DRAWING TITLE:
6TH OF OCTOBER MONORAIL
SHOP DRAWING FOR BRIDGE 6OL11-37
STEEL TRUSS (II).
W20

Project Code	Rubric	Initiator	Lot	Ref	Number	Revision
93M	0407	AAC	6OL11	DWG	90345	A

Tekla structures

All holes are 22mm U.N.O Length & Area & Weight per piece

Mark	Profile	Grade	QTY	Length	Area	Weight
W21	PL35*1194.6	S355J2N	2	2050.1	4.13	537.6

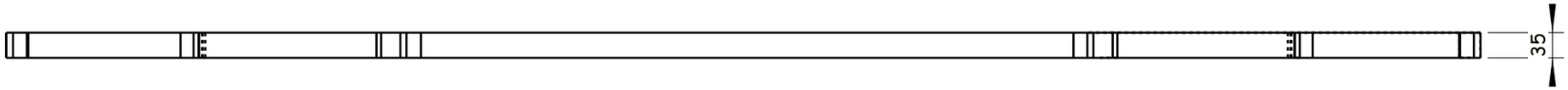

-Drawing shall be updated according to the comments on the GA drawing.
-Approval is subjected to the approval of coordination package between multi-discipline.

REVIEWED WITH COMMENT
MONORAILS PROJECT

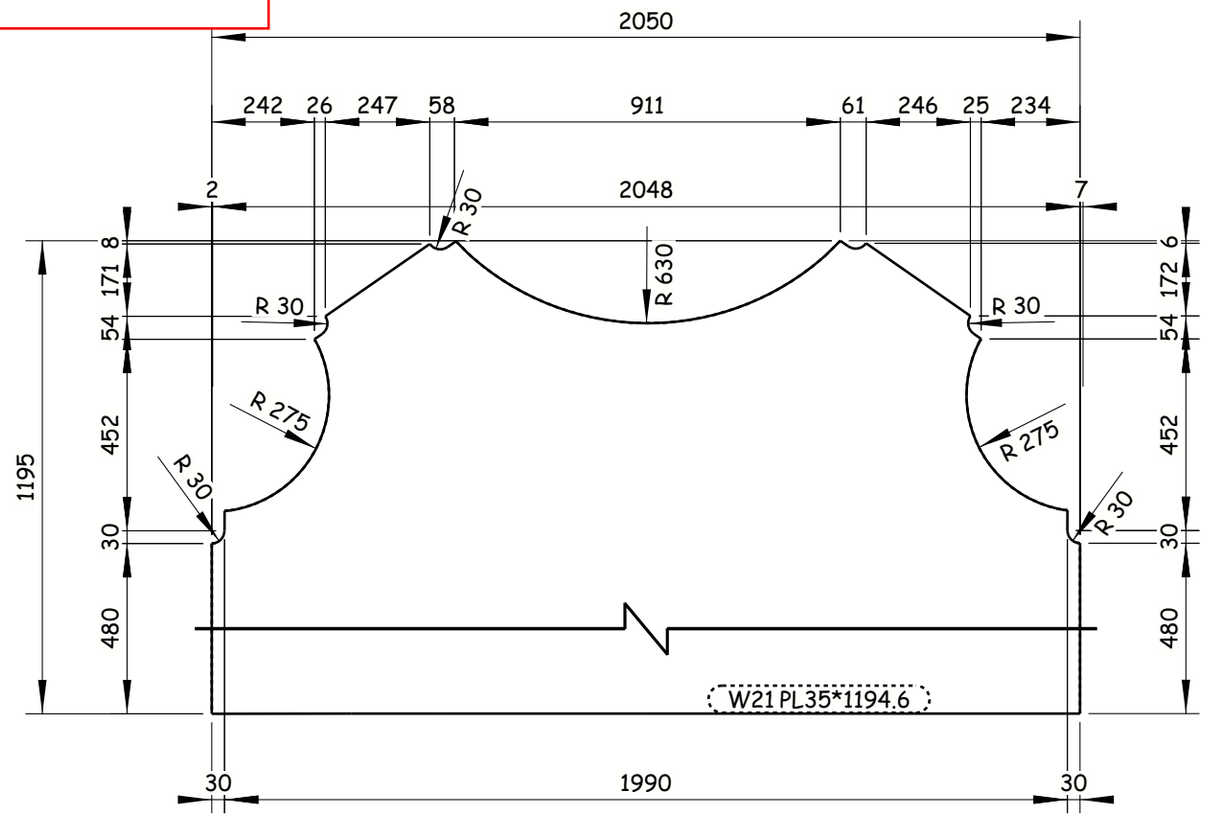

2 REQUIRED AS DRAWN E.SH W21

6 October Monorail
Engineering Unit
Valid For Construction

GENERAL NOTES:

1. ALL DIMENSIONS ARE IN MILLIMETERS UNLESS OTHERWISE SPECIFIED.
2. LEVELS ARE IN METERS
3. DESIGN SERVICE LIFE OF 100 YEARS.
4. FLANGES OF TOP AND BOTTOM CHORDS TO BE SUPPLIED WITH IMPROVED THROUGH THICKNESS PROPERTIES Z25 ACCORDING TO EN10164.

REFERENCE DRAWINGS

1	93M-0407-SEN-6OL11-END-10118-B PAGE 01:17
2	
3	
4	
5	
6	
7	
8	
9	
10	
11	

6TH OF OCTOBER CITY RAIL TRANSIT MONORAIL &
NEW CAPITAL CITY RAIL TRANSIT MONORAIL

The Authority
Hill International
Authority Consultant

ORASCOM CONSTRUCTION
BOMBARDIER
Main Contractor

SENER
SHAKER CONSULTANCY GROUP
Designer

CONTRACTOR & CONSULTANT:
ENGINEERING HOUSE FOR CONSULTANCY

SCALE	CHD DRAWING	DATE
AS SHOWN		20.11.2024

REV	DATE	BY	DESCRIPTION	CHK	APD
A	20-11-24	E.SH	ISSUE FOR APPROVAL	A.SH	M.M

DRAWING TITLE:
6TH OF OCTOBER MONORAIL
SHOP DRAWING FOR BRIDGE 6OL11-37
STEEL TRUSS (II).
W21

Project Code	Rubric	Initiator	Lot	Ref	Number	Revision
93M	0407	AAC	60L11	DWG	90346	A

Tekla structures

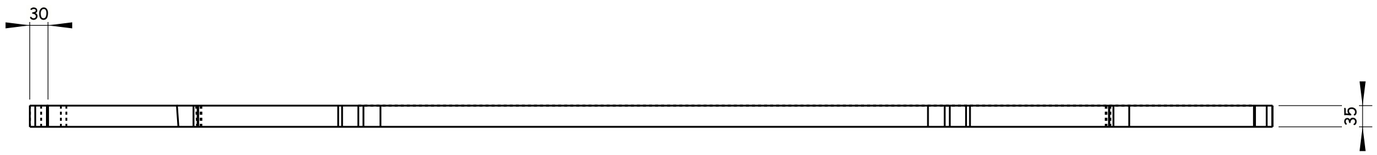

All holes are 22mm U.N.O Length & Area & Weight per piece						
W22	PL35*1192.2	S355J2N	1	2051.3	4.12	536.2
Mark	Profile	Grade	QTY	Length	Area	Weight

-Drawing shall be updated according to the comments on the GA drawing.
-Approval is subjected to the approval of coordination package between multi-discipline.

REVIEWED WITH COMMENT
MONORAILS PROJECT

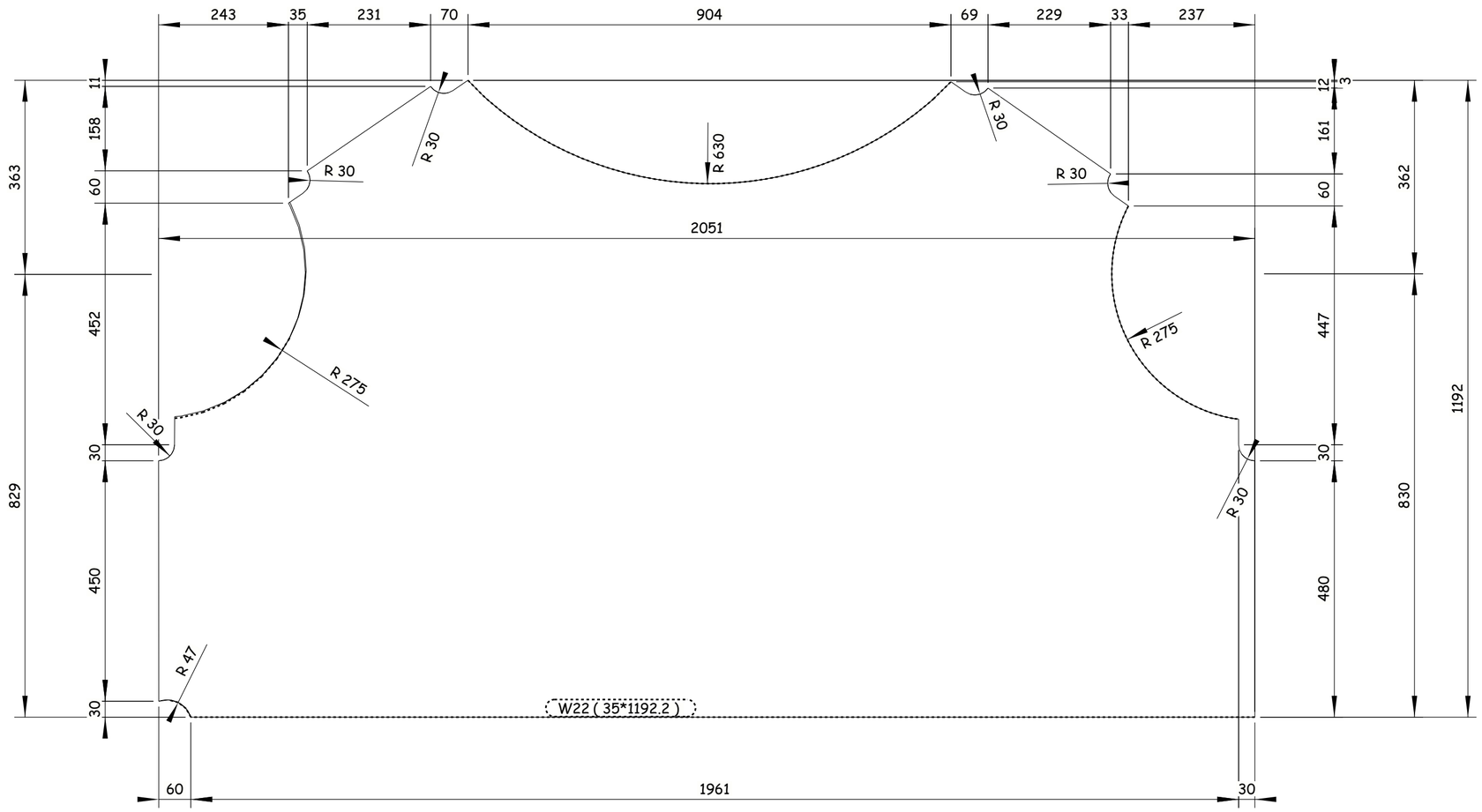

1 REQUIRED AS DRAWN E.SH W22

GENERAL NOTES:

1. ALL DIMENSIONS ARE IN MILLIMETERS UNLESS OTHERWISE SPECIFIED.
2. LEVELS ARE IN METERS
3. DESIGN SERVICE LIFE OF 100 YEARS.
4. FLANGES OF TOP AND BOTTOM CHORDS TO BE SUPPLIED WITH IMPROVED THROUGH THICKNESS PROPERTIES Z25 ACCORDING TO EN10164.

REFERENCE DRAWINGS

1	93M-0407-SEN-6OL11-END-10118-B PAGE 01:17
2	
3	
4	
5	
6	
7	
8	
9	
10	
11	

6TH OF OCTOBER CITY RAIL TRANSIT MONORAIL &
NEW CAPITAL CITY RAIL TRANSIT MONORAIL

The Authority
Hill International
Authority Consultant

ORASCOM CONSTRUCTION
BOMBARDIER
Main Contractor

SENER
SHAKER CONSULTANCY GROUP
Designer

CONTRACTOR:
CONSULTANT:
ENGINEERING HOUSE FOR CONSULTANCY

6 October Monorail
Engineering Unit
Valid For Construction

SCALE			DATE
AS SHOWN		SHOP DRAWING	20.11.2024

REV	DATE	BY	DESCRIPTION	CHK	APD
A	20-11-24	E.SH	ISSUE FOR APPROVAL	A.SH	M.M

DRAWING TITLE:
6TH OF OCTOBER MONORAIL
SHOP DRAWING FOR BRIDGE 6OL11-37
STEEL TRUSS (II).
W22

Project Code	Rubric	Initiator	Lot	Ref	Number	Revision
9 3 M	0 4 0 7	A A C	6 0 L 1 1	D W G	90347	A

Tekla structures

-Drawing shall be updated according to the comments on the GA drawing.
-Approval is subjected to the approval of coordination package between multi-discipline.

REVIEWED WITH COMMENT
MONORAILS PROJECT

All holes are 22mm U.N.O Length & Area & Weight per piece						
W23	PL35*1191.6	S355J2N	1	2050.0	4.12	536.3
Mark	Profile	Grade	QTY	Length	Area	Weight

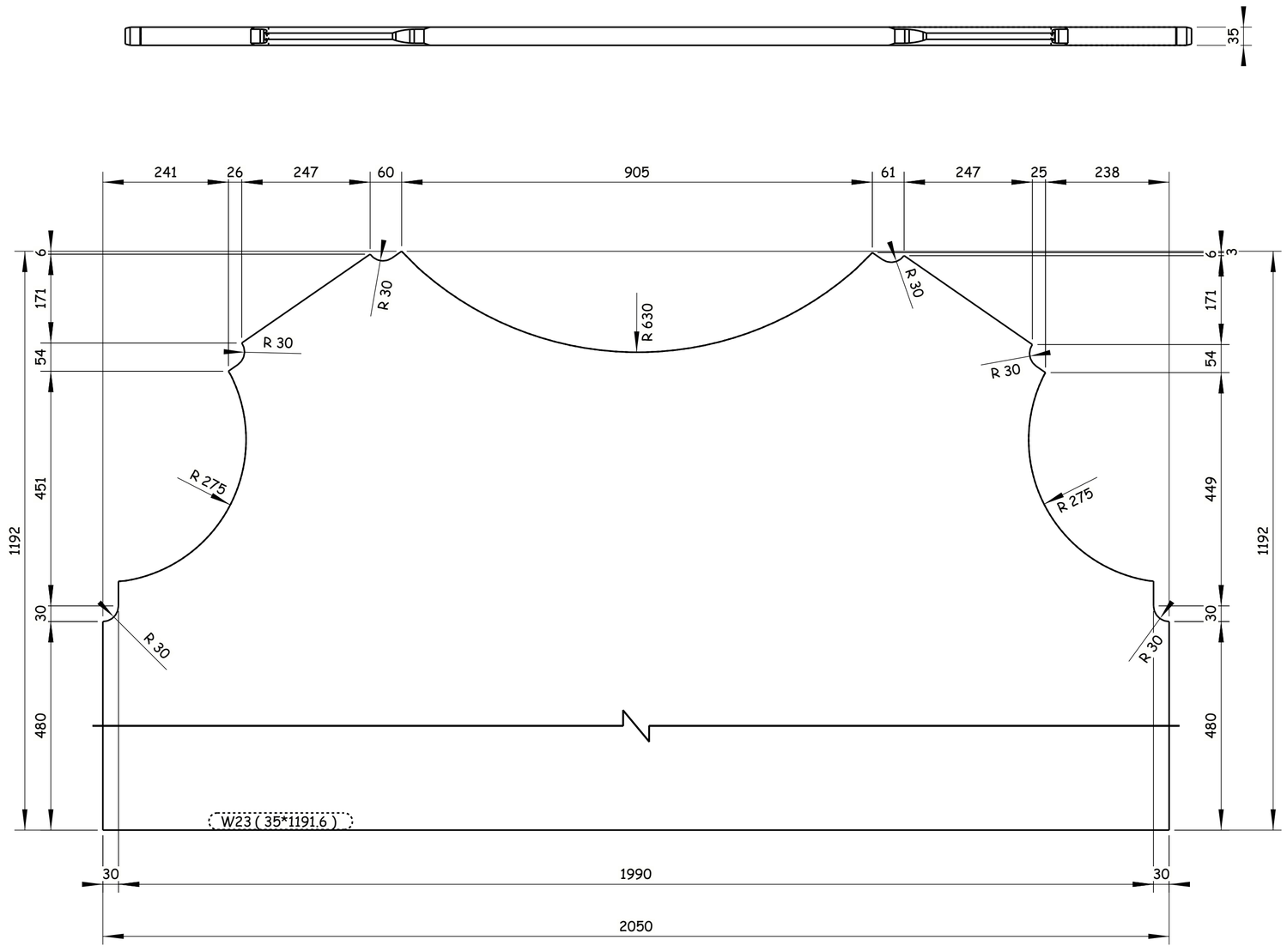

1 REQUIRED AS DRAWN E.SH W23

GENERAL NOTES:

1. ALL DIMENSIONS ARE IN MILLIMETERS UNLESS OTHERWISE SPECIFIED.
2. LEVELS ARE IN METERS
3. DESIGN SERVICE LIFE OF 100 YEARS.
4. FLANGES OF TOP AND BOTTOM CHORDS TO BE SUPPLIED WITH IMPROVED THROUGH THICKNESS PROPERTIES Z25 ACCORDING TO EN10164.

REFERENCE DRAWINGS

1	93M-0407-SEN-6OL11-END-10118-B PAGE 01:17
2	
3	
4	
5	
6	
7	
8	
9	
10	
11	

6TH OF OCTOBER CITY RAIL TRANSIT MONORAIL &
NEW CAPITAL CITY RAIL TRANSIT MONORAIL

The Authority — Hill International Authority Consultant — Main Contractor — Designer

CONTRACTOR
CONSULTANT:

ENGINEERING HOUSE FOR CONSULTANCY

SCALE: AS SHOWN | SHOP DRAWING | DATE: 20.11.2024

REV	DATE	BY	DESCRIPTION	CHK	APD
A	20-11-24	E.SH	ISSUE FOR APPROVAL	A.SH	M.M

6 October Monorail
Engineering Unit
Valid For Construction

DRAWING TITLE:
6TH OF OCTOBER MONORAIL
SHOP DRAWING FOR BRIDGE 6OL11-37
STEEL TRUSS (II).
W23

Project Code	Rubric	Initiator	Lot	Ref	Number	Revision
9 3 M	0 4 0 7	A A C	6 0 L 1 1	D W G	90348	A

Tekla structures

-Drawing shall be updated according to the comments on the GA drawing.
-Approval is subjected to the approval of coordination package between multi-discipline.

REVIEWED WITH COMMENT
MONORAILS PROJECT

All holes are 22mm U.N.O Length & Area & Weight per piece						
W24	PL35*1206.4	S355J2N	2	2050.9	4.16	541.7
Mark	Profile	Grade	QTY	Length	Area	Weight

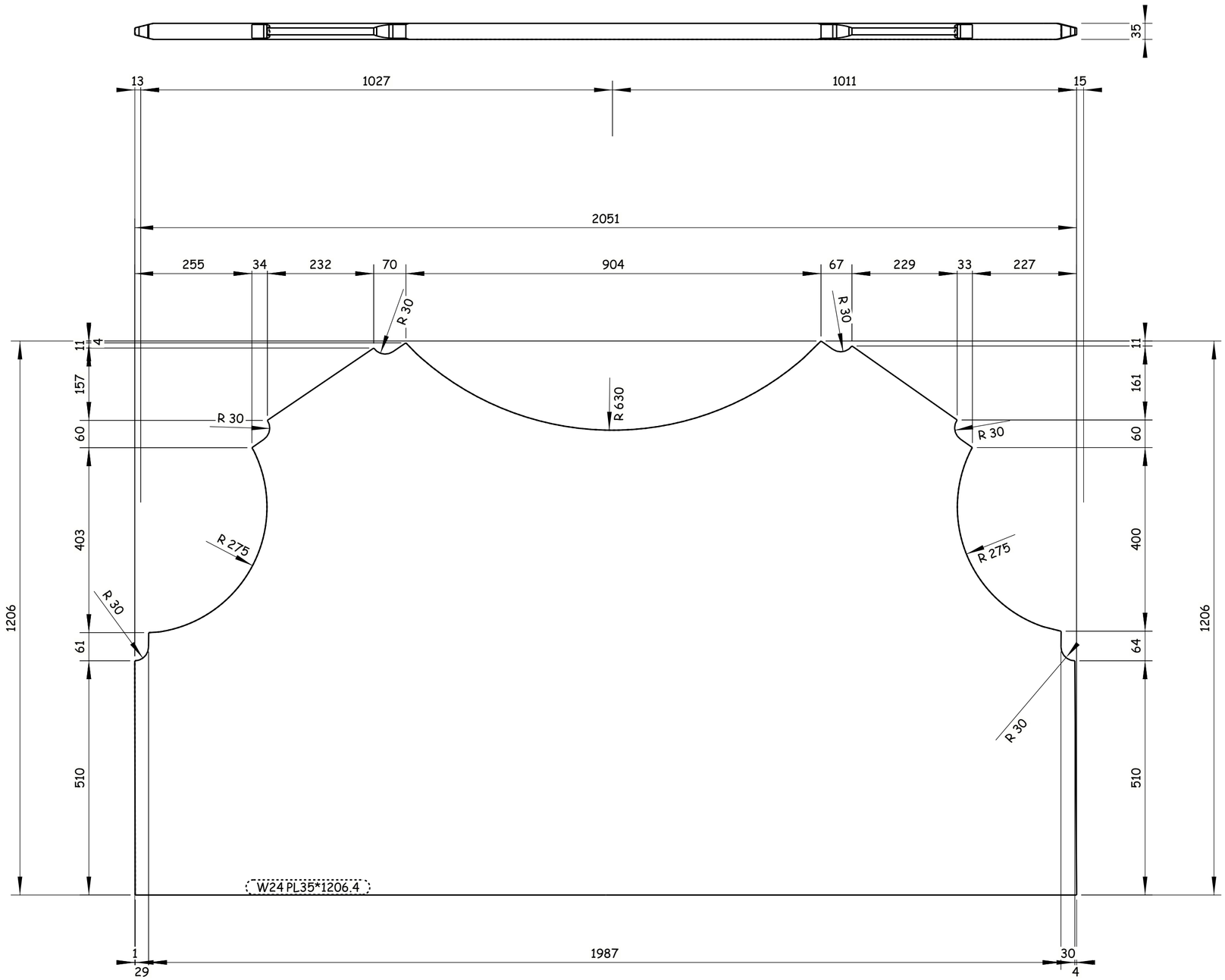

2 REQUIRED AS DRAWN E.SH W24

GENERAL NOTES:

1. ALL DIMENSIONS ARE IN MILLIMETERS UNLESS OTHERWISE SPECIFIED.
2. LEVELS ARE IN METERS
3. DESIGN SERVICE LIFE OF 100 YEARS.
4. FLANGES OF TOP AND BOTTOM CHORDS TO BE SUPPLIED WITH IMPROVED THROUGH THICKNESS PROPERTIES Z25 ACCORDING TO EN10164.

REFERENCE DRAWINGS

1	93M-0407-SEN-6OL11-END-10118-B PAGE 01:17
2	
3	
4	
5	
6	
7	
8	
9	
10	
11	

6TH OF OCTOBER CITY RAIL TRANSIT MONORAIL &
NEW CAPITAL CITY RAIL TRANSIT MONORAIL

The Authority — Hill International Authority Consultant — ORASCOM CONSTRUCTION — BOMBARDIER — Main Contractor — SENER — SHAKER CONSULTANCY GROUP — Designer

CONTRACTOR:
CONSULTANT:
ENGINEERING HOUSE FOR CONSULTANCY

SCALE	SHOP DRAWING	DATE
AS SHOWN		20.11.2024

REV	DATE	BY	DESCRIPTION	CHK	APD
A	20-11-24	E.SH	ISSUE FOR APPROVAL	A.SH	M.M

6 October Monorail
Engineering Unit
Valid For Construction

DRAWING TITLE:
6TH OF OCTOBER MONORAIL
SHOP DRAWING FOR BRIDGE 6OL11-37
STEEL TRUSS (II).
W24

Project Code	Rubric	Initiator	Lot	Ref	Number	Revision
9 3 M	0 4 0 7	A A C	6 0 L 1 1	D W G	90349	A

Tekla structures

All holes are 22mm U.N.O Length & Area & Weight per piece						
W25	PL35*1191.6	S355J2N	1	2050.9	4.13	536.9
Mark	Profile	Grade	QTY	Length	Area	Weight

-Drawing shall be updated according to the comments on the GA drawing.
-Approval is subjected to the approval of coordination package between multi-discipline.

REVIEWED WITH COMMENT
MONORAILS PROJECT

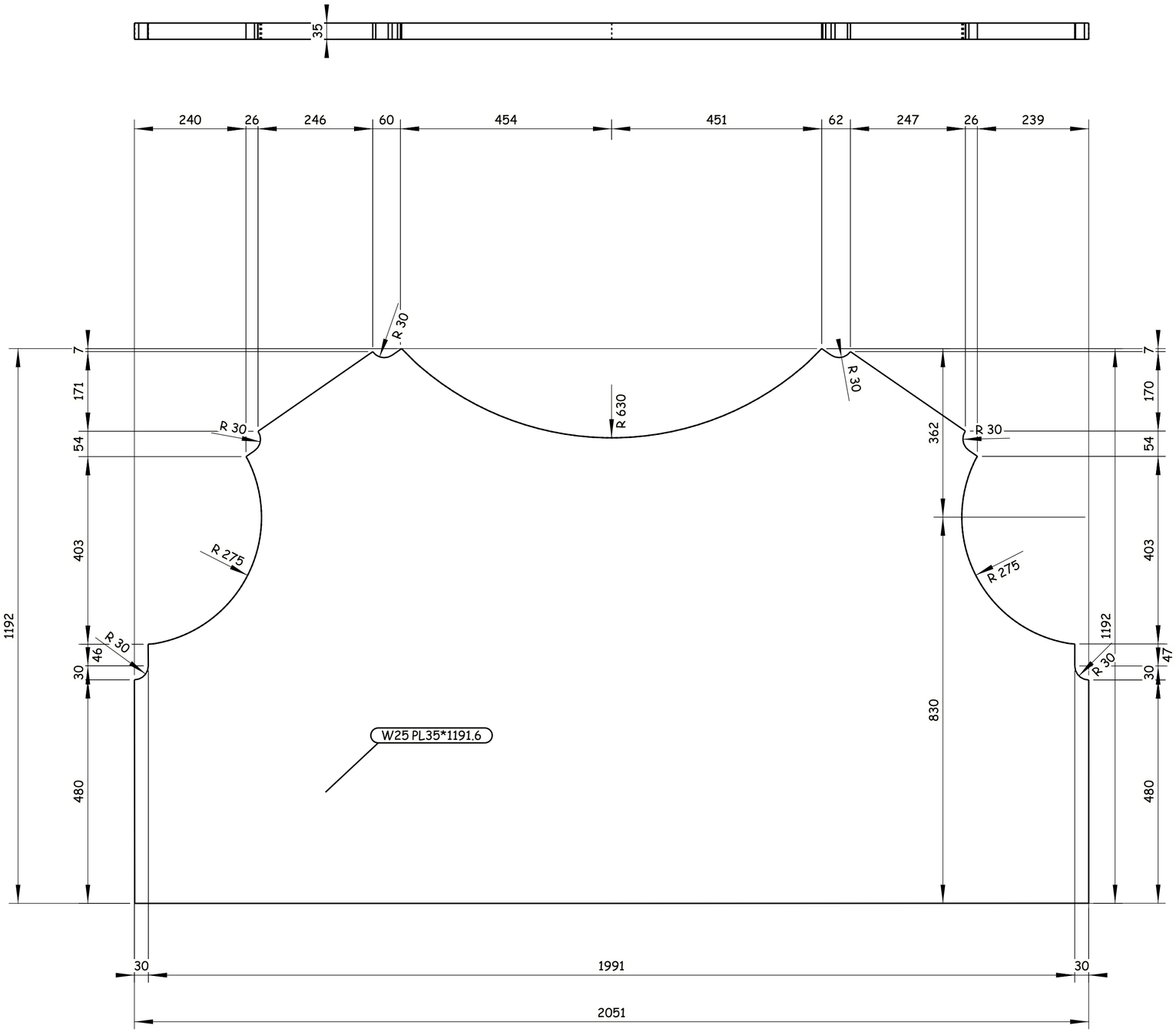

1 REQUIRED AS DRAWN E.SH W25

Tekla structures

GENERAL NOTES:

1. ALL DIMENSIONS ARE IN MILLIMETERS UNLESS OTHERWISE SPECIFIED.
2. LEVELS ARE IN METERS
3. DESIGN SERVICE LIFE OF 100 YEARS.
4. FLANGES OF TOP AND BOTTOM CHORDS TO BE SUPPLIED WITH IMPROVED THROUGH THICKNESS PROPERTIES Z25 ACCORDING TO EN10164.

REFERENCE DRAWINGS

1	93M-0407-SEN-6OL11-END-10118-B PAGE 01:17
2	
3	
4	
5	
6	
7	
8	
9	
10	
11	

6TH OF OCTOBER CITY RAIL TRANSIT MONORAIL &
NEW CAPITAL CITY RAIL TRANSIT MONORAIL

The Authority — Hill International Authority Consultant

ORASCOM CONSTRUCTION — Main Contractor

BOMBARDIER — SENER — SHAKER CONSULTANCY GROUP — Designer

CONTRACTOR
CONSULTANT
ENGINEERING HOUSE FOR CONSULTANCY

SCALE: AS SHOWN | SHOP DRAWING | DATE: 20.11.2024

REV	DATE	BY	DESCRIPTION	CHK	APD
A	20-11-24	E.SH	ISSUE FOR APPROVAL	A.SH	M.M

6 October Monorail
Engineering Unit
Valid For Construction

DRAWING TITLE:
6TH OF OCTOBER MONORAIL
SHOP DRAWING FOR BRIDGE 6OL11-37
STEEL TRUSS (II).
W25

Project Code	Rubric	Initiator	Lot	Ref	Number	Revision
93M	0407	AAC	60L11	DWG	90350	A

All holes are 22mm U.N.O Length & Area & Weight per piece						
W26	PL35*1194.6	S355J2N	1	2050.1	4.13	537.6
Mark	Profile	Grade	QTY	Length	Area	Weight

-Drawing shall be updated according to the comments on the GA drawing.
-Approval is subjected to the approval of coordination package between multi-discipline.

REVIEWED WITH COMMENT
MONORAILS PROJECT

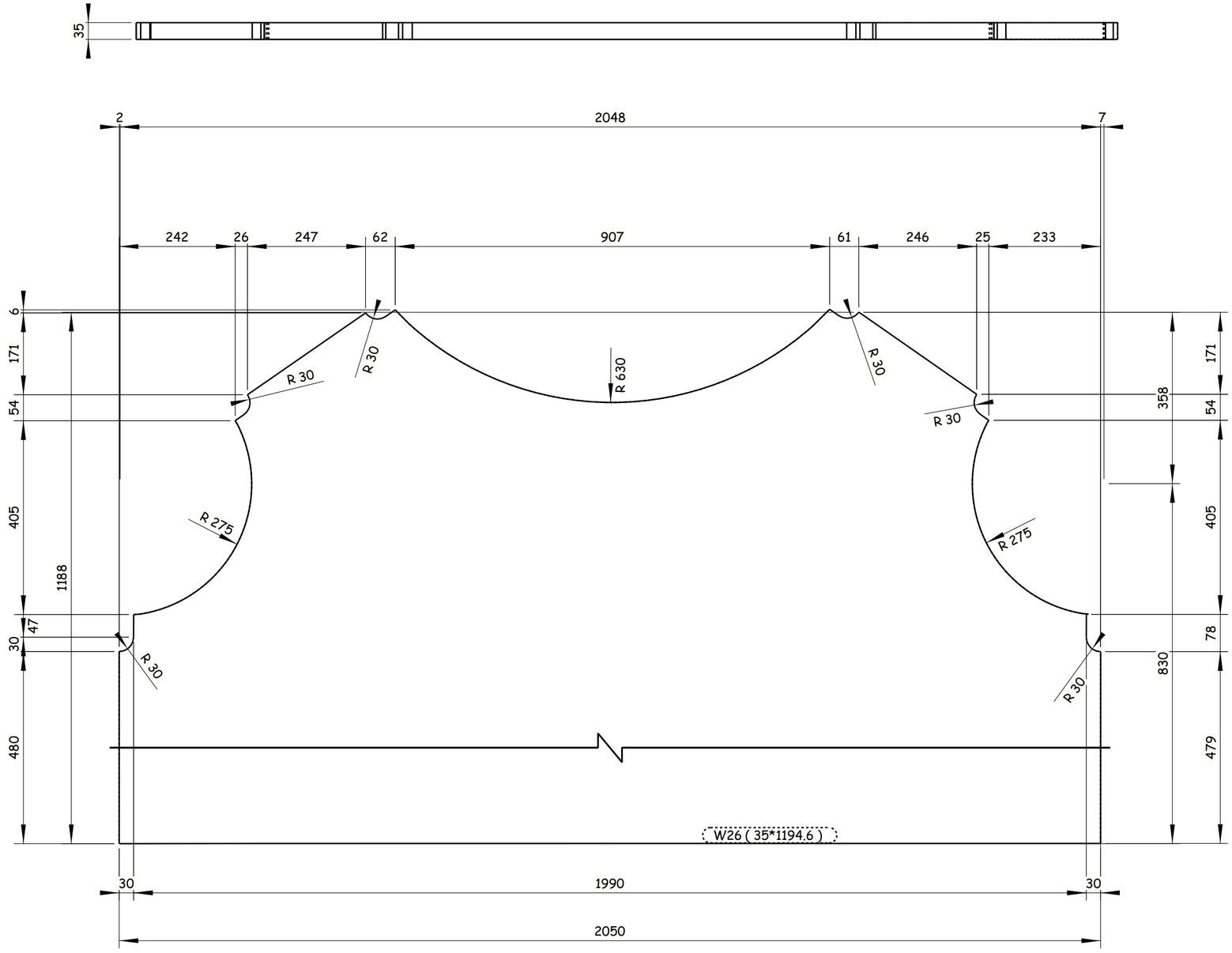

1 REQUIRED AS DRAWN E.SH W26

GENERAL NOTES:

1. ALL DIMENSIONS ARE IN MILLIMETERS UNLESS OTHERWISE SPECIFIED.
2. LEVELS ARE IN METERS
3. DESIGN SERVICE LIFE OF 100 YEARS.
4. FLANGES OF TOP AND BOTTOM CHORDS TO BE SUPPLIED WITH IMPROVED THROUGH THICKNESS PROPERTIES Z25 ACCORDING TO EN10164.

REFERENCE DRAWINGS

1	93M-0407-SEN-6OL11-END-10118-B PAGE 01:17
2	
3	
4	
5	
6	
7	
8	
9	
10	
11	

6TH OF OCTOBER CITY RAIL TRANSIT MONORAIL &
NEW CAPITAL CITY RAIL TRANSIT MONORAIL

The Authority / Hill International Authority Consultant — ORASCOM CONSTRUCTION — BOMBARDIER — SENER / SHAKER CONSULTANCY GROUP

Main Contractor — Designer

CONTRACTOR:
CONSULTANT:
ENGINEERING HOUSE FOR CONSULTANCY

SCALE	SHOP DRAWING	DATE
AS SHOWN		20.11.2024

REV	DATE	BY	DESCRIPTION	CHK	APD
A	20-11-24	E.SH	ISSUE FOR APPROVAL	A.SH	M.M

6 October Monorail
Engineering Unit
Valid For Construction

DRAWING TITLE:
6TH OF OCTOBER MONORAIL
SHOP DRAWING FOR BRIDGE 6OL11-37
STEEL TRUSS (II).
W26

Project Code	Rubric	Initiator	Lot	Ref	Number	Revision
9 3 M	0 4 0 7	A A C	6 0 L 1 1	D W G	90351	A

Tekla structures

All holes are 22mm U.N.O Length & Area & Weight per piece						
W27	PL35*1192.2	S355J2N	1	2051.3	4.12	536.2
Mark	Profile	Grade	QTY	Length	Area	Weight

-Drawing shall be updated according to the comments on the GA drawing.
-Approval is subjected to the approval of coordination package between multi-discipline.

REVIEWED WITH COMMENT
MONORAILS PROJECT

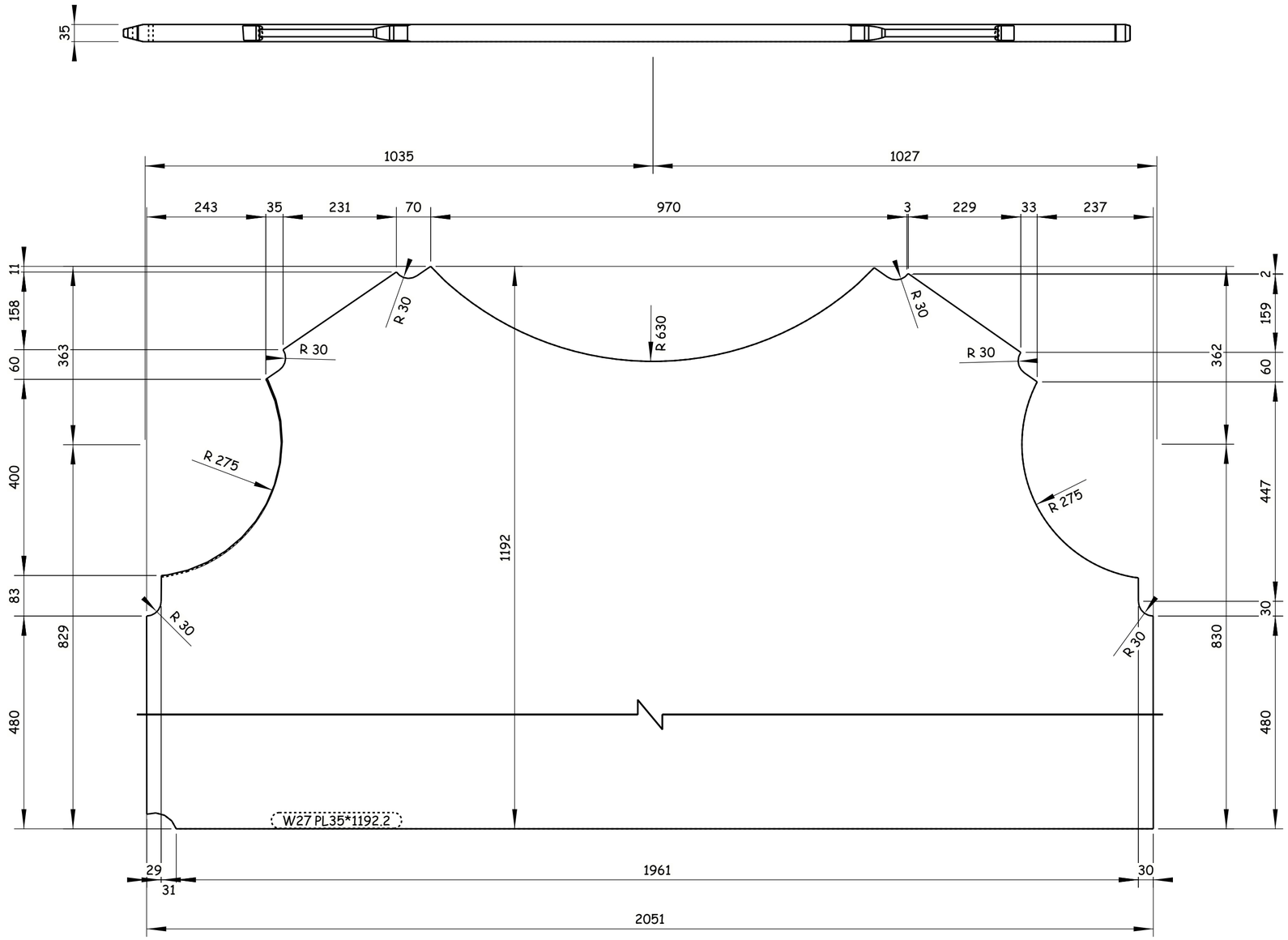

1 REQUIRED AS DRAWN E.SH W27

GENERAL NOTES:

1. ALL DIMENSIONS ARE IN MILLIMETERS UNLESS OTHERWISE SPECIFIED.
2. LEVELS ARE IN METERS
3. DESIGN SERVICE LIFE OF 100 YEARS.
4. FLANGES OF TOP AND BOTTOM CHORDS TO BE SUPPLIED WITH IMPROVED THROUGH THICKNESS PROPERTIES Z25 ACCORDING TO EN10164.

REFERENCE DRAWINGS

1	93M-0407-SEN-6OL11-END-10118-B PAGE 01:17
2	
3	
4	
5	
6	
7	
8	
9	
10	
11	

6TH OF OCTOBER CITY RAIL TRANSIT MONORAIL &
NEW CAPITAL CITY RAIL TRANSIT MONORAIL

The Authority | Hill International Authority Consultant | Main Contractor | Designer

CONTRACTOR
CONSULTANT:

ENGINEERING HOUSE FOR CONSULTANCY

SCALE		SHOP DRAWING	DATE
AS SHOWN			20.11.2024

REV	DATE	BY	DESCRIPTION	CHK	APD
A	20-11-24	E.SH	ISSUE FOR APPROVAL	A.SH	M.M

6 October Monorail
Engineering Unit
Valid For Construction

DRAWING TITLE:
6TH OF OCTOBER MONORAIL
SHOP DRAWING FOR BRIDGE 6OL11-37
STEEL TRUSS (II).
W27

Project Code	Rubric	Initiator	Lot	Ref	Number	Revision
9 3 M	0 4 0 7	A A C	6 0 L 1 1	D W G	90352	A

Tekla structures

-Drawing shall be updated according to the comments on the GA drawing.
-Approval is subjected to the approval of coordination package between multi-discipline.

REVIEWED WITH COMMENT
MONORAILS PROJECT

All holes are 22mm U.N.O Length & Area & Weight per piece

Mark	Profile	Grade	QTY	Length	Area	Weight
W28	PL35*1192.2	S355J2N	1	2051.3	4.12	536.2

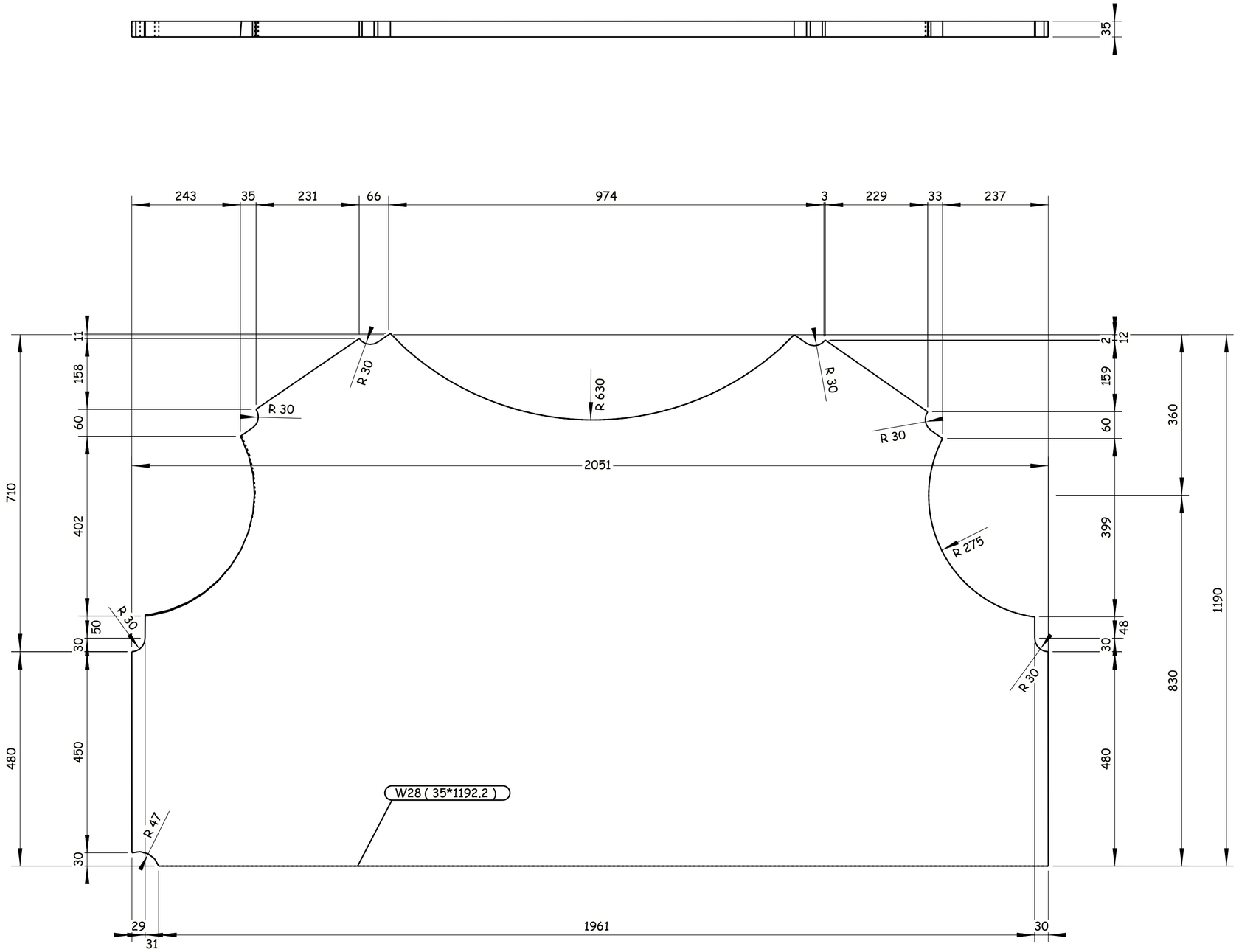

1 REQUIRED AS DRAWN E.SH W28

GENERAL NOTES:

1. ALL DIMENSIONS ARE IN MILLIMETERS UNLESS OTHERWISE SPECIFIED.
2. LEVELS ARE IN METERS
3. DESIGN SERVICE LIFE OF 100 YEARS.
4. FLANGES OF TOP AND BOTTOM CHORDS TO BE SUPPLIED WITH IMPROVED THROUGH THICKNESS PROPERTIES Z25 ACCORDING TO EN10164.

REFERENCE DRAWINGS

1	93M-0407-SEN-6OL11-END-10118-B PAGE 01:17
2	
3	
4	
5	
6	
7	
8	
9	
10	
11	

6TH OF OCTOBER CITY RAIL TRANSIT MONORAIL &
NEW CAPITAL CITY RAIL TRANSIT MONORAIL

The Authority | Hill International Authority Consultant | Main Contractor | Designer

CONTRACTOR:
CONSULTANT:
ENGINEERING HOUSE FOR CONSULTANCY

SCALE	SHOP DRAWING	DATE
AS SHOWN		20.11.2024

REV	DATE	BY	DESCRIPTION	CHK	APD
A	20-11-24	E.SH	ISSUE FOR APPROVAL	A.SH	M.M

6 October Monorail
Engineering Unit
Valid For Construction

DRAWING TITLE:
6TH OF OCTOBER MONORAIL
SHOP DRAWING FOR BRIDGE 6OL11-37
STEEL TRUSS (II).
W28

Project Code	Rubric	Initiator	Lot	Ref	Number	Revision
9 3 M	0 4 0 7	A A C	6 0 L 1 1	D W G	90353	A

Tekla structures

All holes are 22mm U.N.O Length & Area & Weight per piece						
W29	PL35*1206.4	S355J2N	1	2051.0	4.17	543.4
Mark	Profile	Grade	QTY	Length	Area	Weight

-Drawing shall be updated according to the comments on the GA drawing.
-Approval is subjected to the approval of coordination package between multi-discipline.

REVIEWED WITH COMMENT
MONORAILS PROJECT

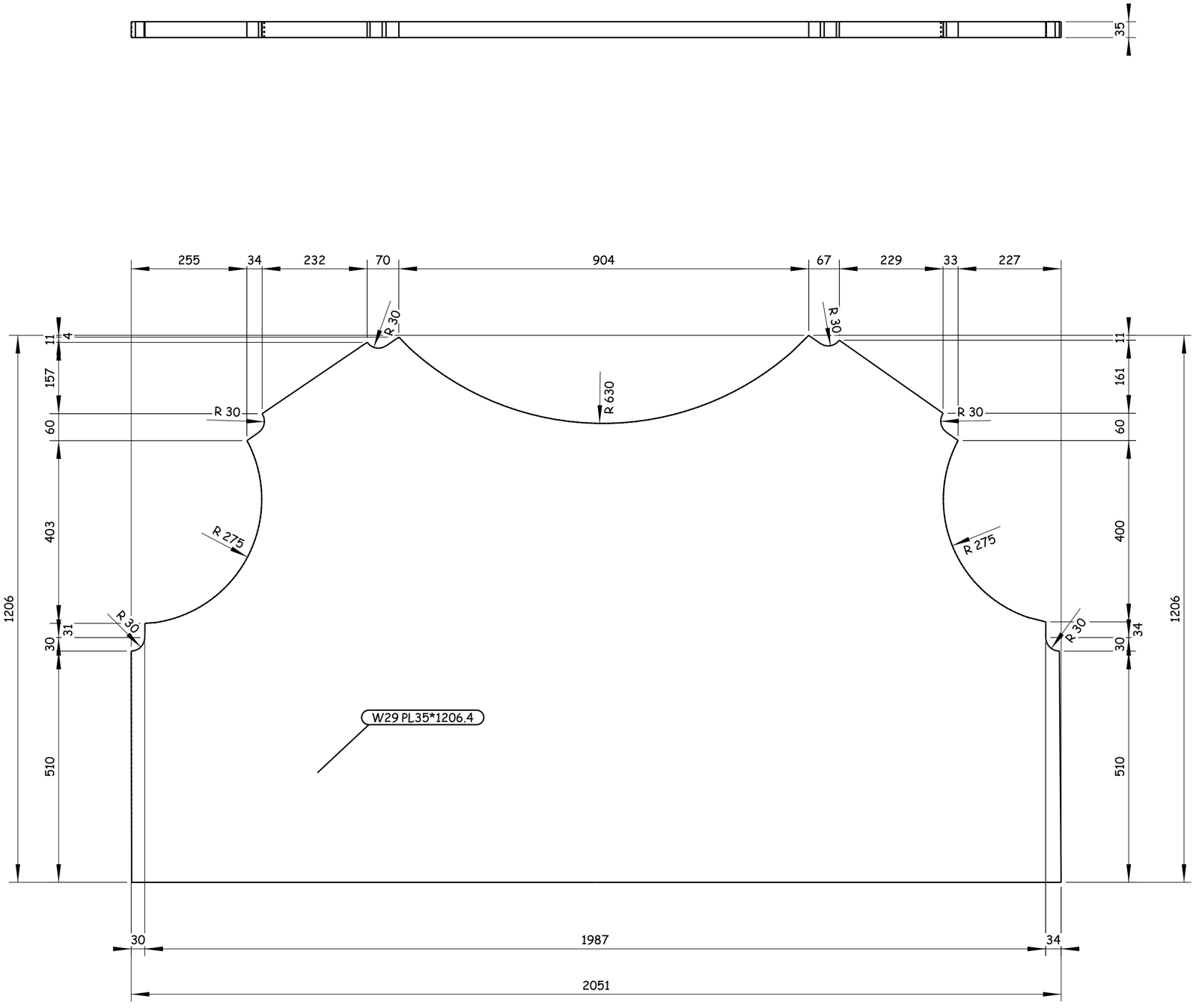

1 REQUIRED AS DRAWN E.SH W29

GENERAL NOTES:

1. ALL DIMENSIONS ARE IN MILLIMETERS UNLESS OTHERWISE SPECIFIED.
2. LEVELS ARE IN METERS
3. DESIGN SERVICE LIFE OF 100 YEARS.
4. FLANGES OF TOP AND BOTTOM CHORDS TO BE SUPPLIED WITH IMPROVED THROUGH THICKNESS PROPERTIES Z25 ACCORDING TO EN10164.

REFERENCE DRAWINGS

1	93M-0407-SEN-6OL11-END-10118-B PAGE 01:17
2	
3	
4	
5	
6	
7	
8	
9	
10	
11	

6TH OF OCTOBER CITY RAIL TRANSIT MONORAIL &
NEW CAPITAL CITY RAIL TRANSIT MONORAIL

The Authority — Authority Consultant: Hill International — Main Contractor: ORASCOM CONSTRUCTION / BOMBARDIER — Designer: SENER / SHAKER CONSULTANCY GROUP

CONTRACTOR
CONSULTANT:
ENGINEERING HOUSE FOR CONSULTANCY

SCALE	SHOP DRAWING	DATE
AS SHOWN		20.11.2024

REV	DATE	BY	DESCRIPTION	CHK	APD
A	20-11-24	E.SH	ISSUE FOR APPROVAL	A.SH	M.M

6 October Monorail
Engineering Unit
Valid For Construction

DRAWING TITLE:
6TH OF OCTOBER MONORAIL
SHOP DRAWING FOR BRIDGE 6OL11-37
STEEL TRUSS (II).
W29

Project Code	Rubric	Initiator	Lot	Ref	Number	Revision
93M	0407	AAC	60L11	DWG	90354	A

Tekla structures

-Drawing shall be updated according to the comments on the GA drawing.
-Approval is subjected to the approval of coordination package between multi-discipline.

REVIEWED WITH COMMENT
MONORAILS PROJECT

All holes are 22mm U.N.O Length & Area & Weight per piece

Mark	Profile	Grade	QTY	Length	Area	Weight
W30	PL15*342.5	S355J2N	2	732.5	0.51	28.3

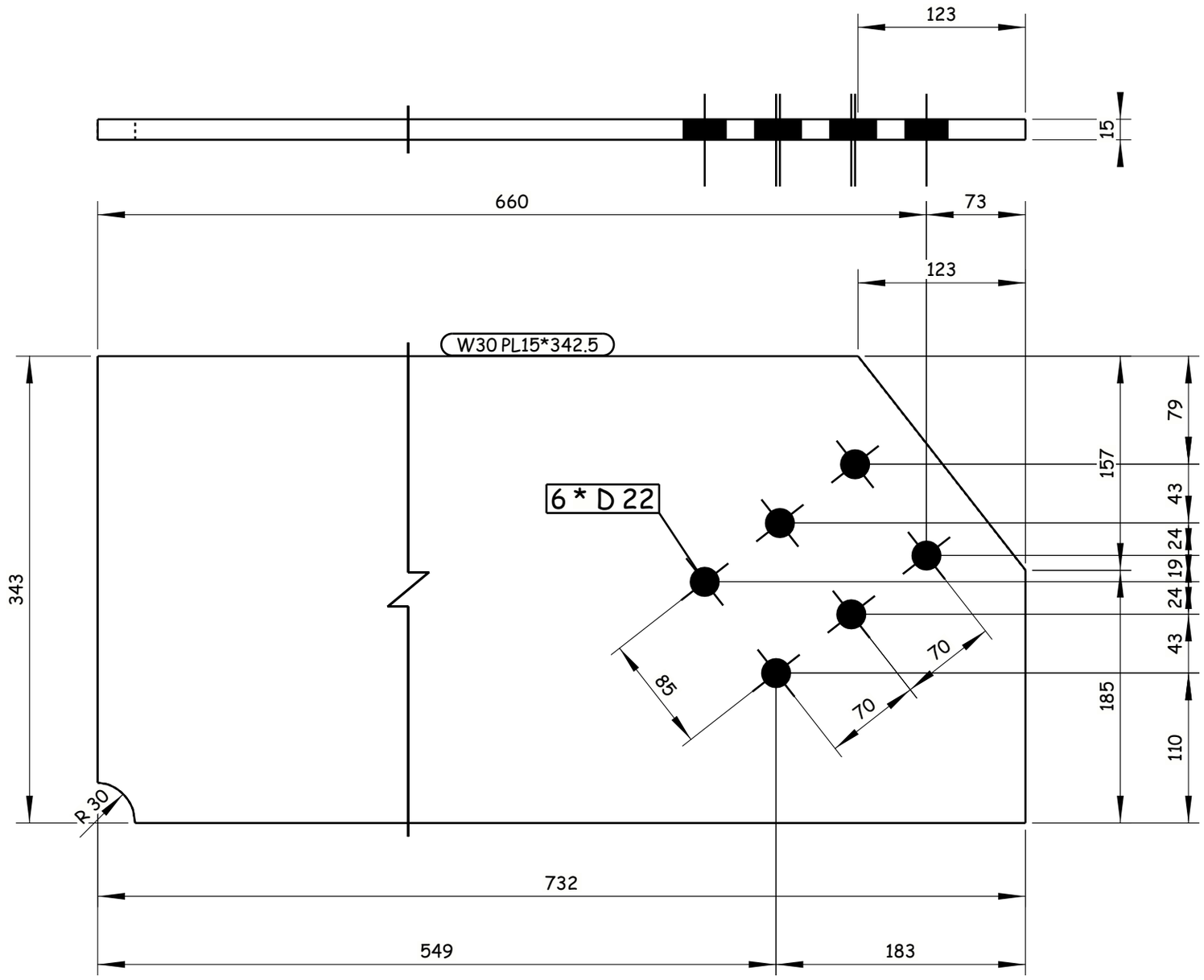

2 REQUIRED AS DRAWN E.SH W30

GENERAL NOTES:

1. ALL DIMENSIONS ARE IN MILLIMETERS UNLESS OTHERWISE SPECIFIED.
2. LEVELS ARE IN METERS
3. DESIGN SERVICE LIFE OF 100 YEARS.
4. FLANGES OF TOP AND BOTTOM CHORDS TO BE SUPPLIED WITH IMPROVED THROUGH THICKNESS PROPERTIES Z25 ACCORDING TO EN10164.

REFERENCE DRAWINGS

1	93M-0407-SEN-6OL11-END-10118-B PAGE 01:17
2	
3	
4	
5	
6	
7	
8	
9	
10	
11	

6TH OF OCTOBER CITY RAIL TRANSIT MONORAIL &
NEW CAPITAL CITY RAIL TRANSIT MONORAIL

The Authority — Authority Consultant
Hill International — Authority Consultant
ORASCOM CONSTRUCTION — Main Contractor
BOMBARDIER — Main Contractor
SENER — Designer
SHAKER CONSULTANCY GROUP — Designer

CONTRACTOR & CONSULTANT:
EHC ENGINEERING HOUSE FOR CONSULTANCY

SCALE	SHOP DRAWING	DATE
AS SHOWN		20.11.2024

REV	DATE	BY	DESCRIPTION	CHK	APD
A	20-11-24	E.SH	ISSUE FOR APPROVAL	A.SH	M.M

6 October Monorail
Engineering Unit
Valid For Construction

DRAWING TITLE:
6TH OF OCTOBER MONORAIL
SHOP DRAWING FOR BRIDGE 6OL11-37
STEEL TRUSS (II).
W30

Project Code	Rubric	Initiator	Lot	Ref	Number	Revision
93M	0407	AAC	60L11	DWG	90355	A

Tekla structures

-Drawing shall be updated according to the comments on the GA drawing.
-Approval is subjected to the approval of coordination package between multi-discipline.

REVIEWED WITH COMMENT
MONORAILS PROJECT

All holes are 22mm U.N.O Length & Area & Weight per piece

Mark	Profile	Grade	QTY	Length	Area	Weight
W31	PL15*342.5	S355J2N	12	727.3	0.51	28.1

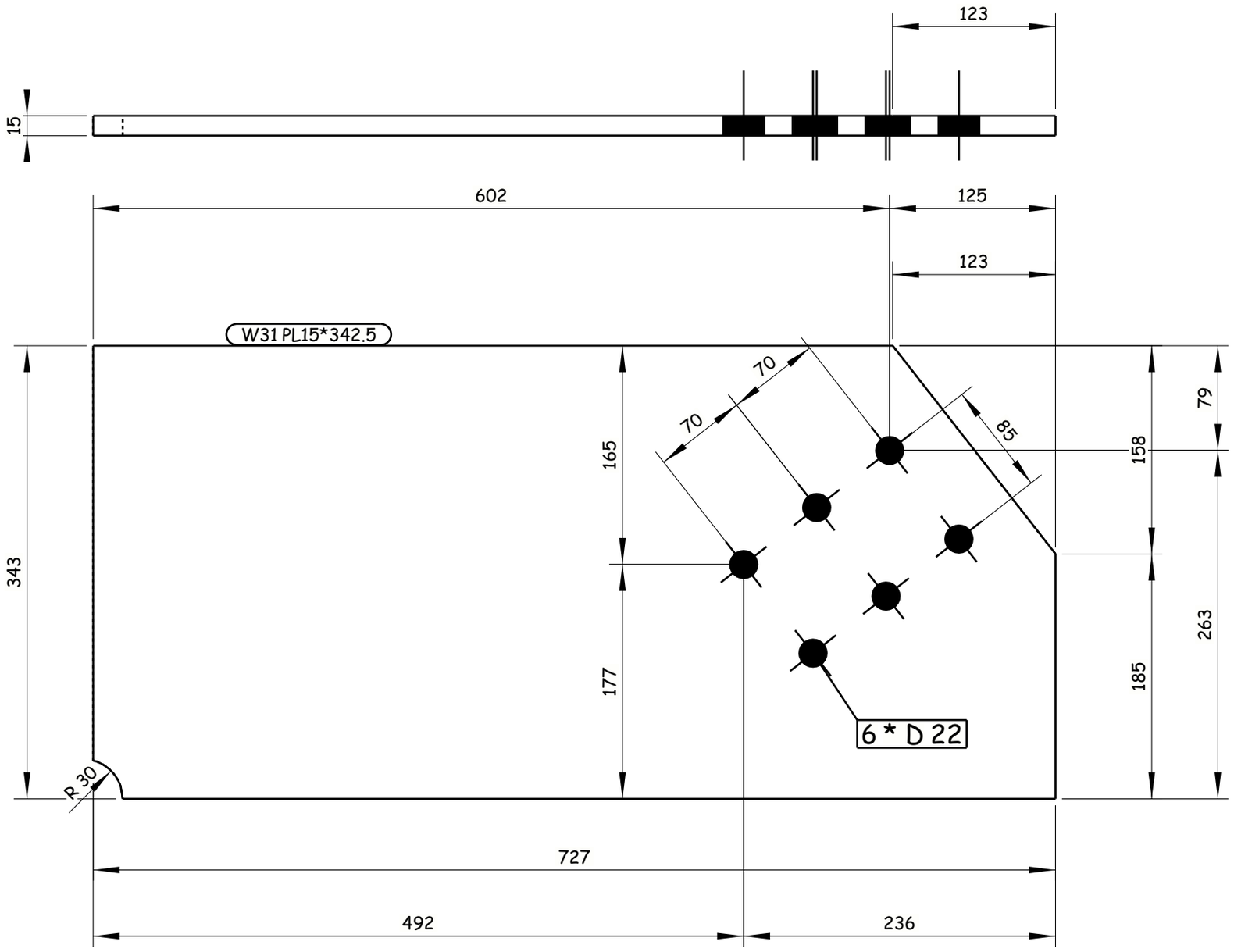

12 REQUIRED AS DRAWN E.SH W31

GENERAL NOTES:

1. ALL DIMENSIONS ARE IN MILLIMETERS UNLESS OTHERWISE SPECIFIED.
2. LEVELS ARE IN METERS
3. DESIGN SERVICE LIFE OF 100 YEARS.
4. FLANGES OF TOP AND BOTTOM CHORDS TO BE SUPPLIED WITH IMPROVED THROUGH THICKNESS PROPERTIES Z25 ACCORDING TO EN10164.

REFERENCE DRAWINGS

1	93M-0407-SEN-6OL11-END-10118-B PAGE 01:17
2	
3	
4	
5	
6	
7	
8	
9	
10	
11	

6TH OF OCTOBER CITY RAIL TRANSIT MONORAIL &
NEW CAPITAL CITY RAIL TRANSIT MONORAIL

The Authority — Hill International Authority Consultant — Main Contractor — Designer

CONTRACTOR CONSULTANT : EHC ENGINEERING HOUSE FOR CONSULTANCY

SCALE AS SHOWN | CHD DRAWING | DATE 20.11.2024

REV	DATE	BY	DESCRIPTION	CHK	APD
A	20-11-24	E.SH	ISSUE FOR APPROVAL	A.SH	M.M

6 October Monorail
Engineering Unit
Valid For Construction

DRAWING TITLE:
6TH OF OCTOBER MONORAIL
SHOP DRAWING FOR BRIDGE 6OL11-37
STEEL TRUSS (II).
W31

Project Code	Rubric	Initiator	Lot	Ref	Number	Revision
9 3 M 0	4 0 7	A A C	6 0 L 1 1	D W G	90356	A

Tekla structures

-Drawing shall be updated according to the comments on the GA drawing.
-Approval is subjected to the approval of coordination package between multi-discipline.

REVIEWED WITH COMMENT
MONORAILS PROJECT

All holes are 22mm U.N.O Length & Area & Weight per piece

Mark	Profile	Grade	QTY	Length	Area	Weight
W32	PL15*198	S355J2N	9	253.2	0.09	4.8

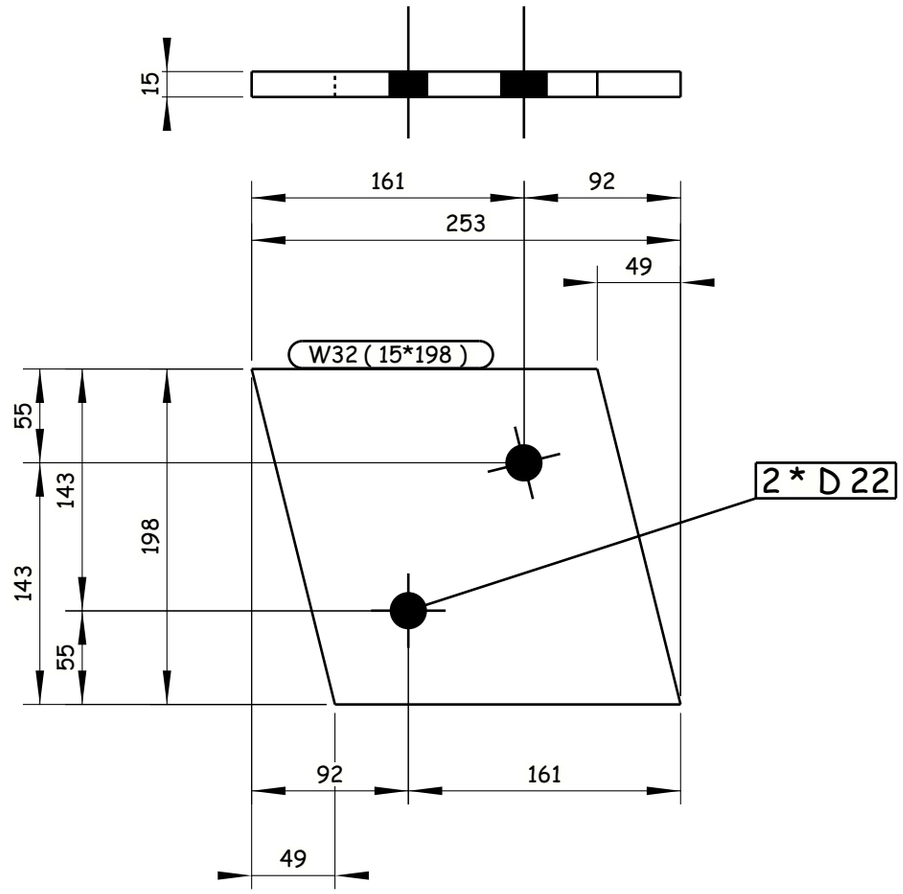

9 REQUIRED AS DRAWN E.SH W32

Tekla structures

GENERAL NOTES:

1. ALL DIMENSIONS ARE IN MILLIMETERS UNLESS OTHERWISE SPECIFIED.
2. LEVELS ARE IN METERS
3. DESIGN SERVICE LIFE OF 100 YEARS.
4. FLANGES OF TOP AND BOTTOM CHORDS TO BE SUPPLIED WITH IMPROVED THROUGH THICKNESS PROPERTIES Z25 ACCORDING TO EN10164.

REFERENCE DRAWINGS

1	93M-0407-SEN-6OL11-END-10118-B PAGE 01:17
2	
3	
4	
5	
6	
7	
8	
9	
10	
11	

6TH OF OCTOBER CITY RAIL TRANSIT MONORAIL &
NEW CAPITAL CITY RAIL TRANSIT MONORAIL

The Authority — Hill International — Authority Consultant
ORASCOM CONSTRUCTION — BOMBARDIER — Main Contractor
SENER — SHAKER CONSULTANCY GROUP — Designer

CONTRACTOR / CONSULTANT :
ENGINEERING HOUSE FOR CONSULTANCY

SCALE: AS SHOWN
SHOP DRAWING
DATE: 20.11.2024

REV	DATE	BY	DESCRIPTION	CHK	APD
A	20-11-24	E.SH	ISSUE FOR APPROVAL	A.SH	M.M

6 October Monorail
Engineering Unit
Valid For Construction

DRAWING TITLE:
6TH OF OCTOBER MONORAIL
SHOP DRAWING FOR BRIDGE 6OL11-37
STEEL TRUSS (II).
W32

Project Code	Rubric		Initiator	Lot		Ref		Number	Revision
9 3	M	0 4 0 7	A A C	6 0	L 1 1	D	W G	90357	A

-Drawing shall be updated according to the comments on the GA drawing.
-Approval is subjected to the approval of coordination package between multi-discipline.

REVIEWED WITH COMMENT
MONORAILS PROJECT

All holes are 22mm U.N.O Length & Area & Weight per piece

Mark	Profile	Grade	QTY	Length	Area	Weight
W33	PL15*342.5	S355J2N	4	732.5	0.51	28.3

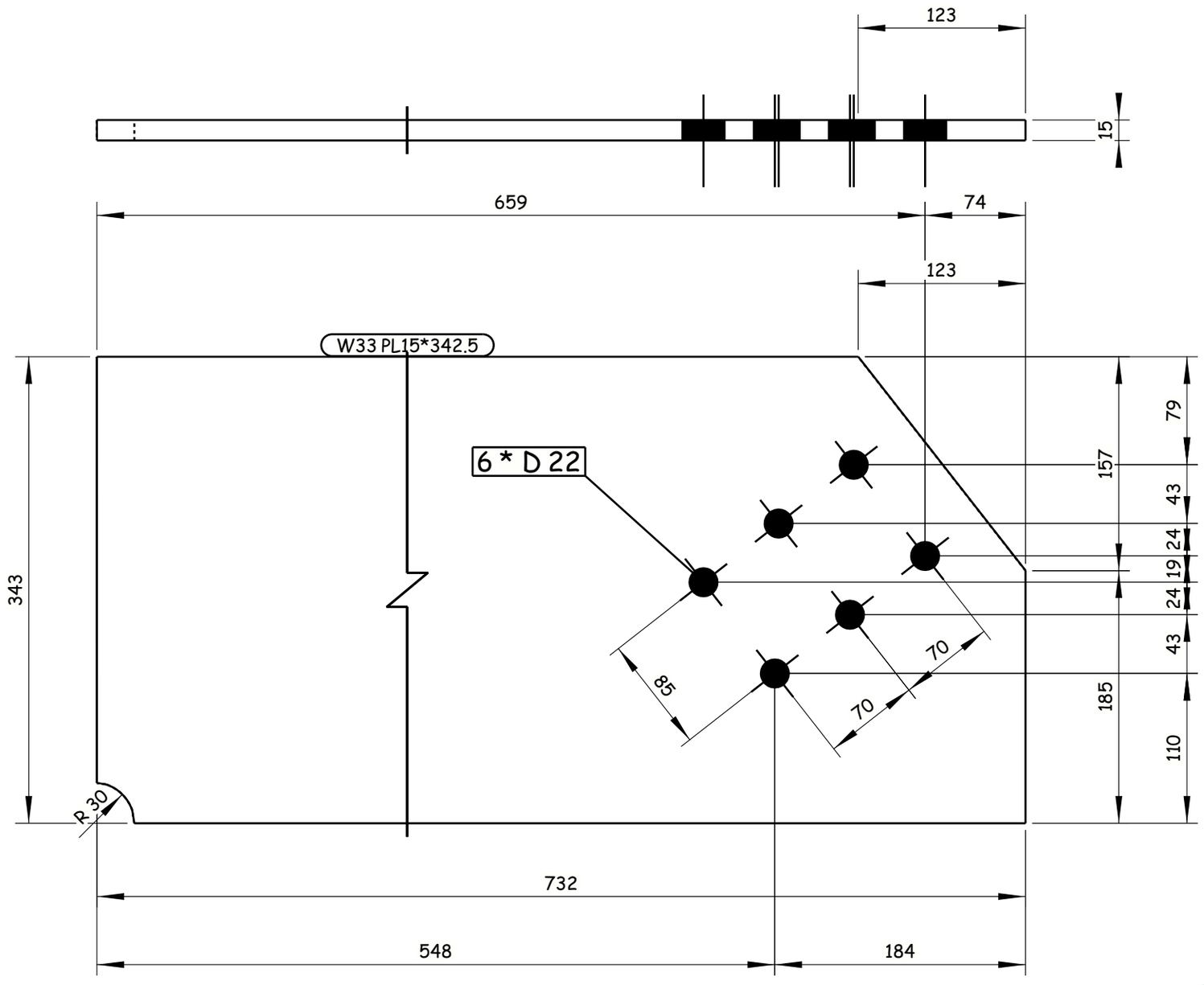

4 REQUIRED AS DRAWN E.SH W33

Tekla structures

GENERAL NOTES:

1. ALL DIMENSIONS ARE IN MILLIMETERS UNLESS OTHERWISE SPECIFIED.
2. LEVELS ARE IN METERS
3. DESIGN SERVICE LIFE OF 100 YEARS.
4. FLANGES OF TOP AND BOTTOM CHORDS TO BE SUPPLIED WITH IMPROVED THROUGH THICKNESS PROPERTIES Z25 ACCORDING TO EN10164.

REFERENCE DRAWINGS

1	93M-0407-SEN-6OL11-END-10118-B PAGE 01:17
2	
3	
4	
5	
6	
7	
8	
9	
10	
11	

6TH OF OCTOBER CITY RAIL TRANSIT MONORAIL &
NEW CAPITAL CITY RAIL TRANSIT MONORAIL

The Authority — Hill International Authority Consultant — ORASCOM CONSTRUCTION — BOMBARDIER — Main Contractor — SENER — SHAKER CONSULTANCY GROUP — Designer

CONTRACTOR & CONSULTANT: ENGINEERING HOUSE FOR CONSULTANCY

6 October Monorail Engineering Unit
Valid For Construction

SCALE: AS SHOWN | SHOP DRAWING | DATE: 20.11.2024

DRAWING TITLE:
6TH OF OCTOBER MONORAIL
SHOP DRAWING FOR BRIDGE 6OL11-37
STEEL TRUSS (II).
W33

REV.	DATE	BY	DESCRIPTION	CHK	APD.
A	20-11-24	E.SH	ISSUE FOR APPROVAL	A.SH	M.M

Project Code	Rubric	Initiator	Lot	Ref	Number	Revision
93M	0407	AAC	60L11	DWG	90358	A

-Drawing shall be updated according to the comments on the GA drawing.
-Approval is subjected to the approval of coordination package between multi-discipline.

REVIEWED WITH COMMENT
MONORAILS PROJECT

All holes are 22mm U.N.O Length & Area & Weight per piece

Mark	Profile	Grade	QTY	Length	Area	Weight
W34	PL15*342.5	S355J2N	4	732.5	0.51	28.3

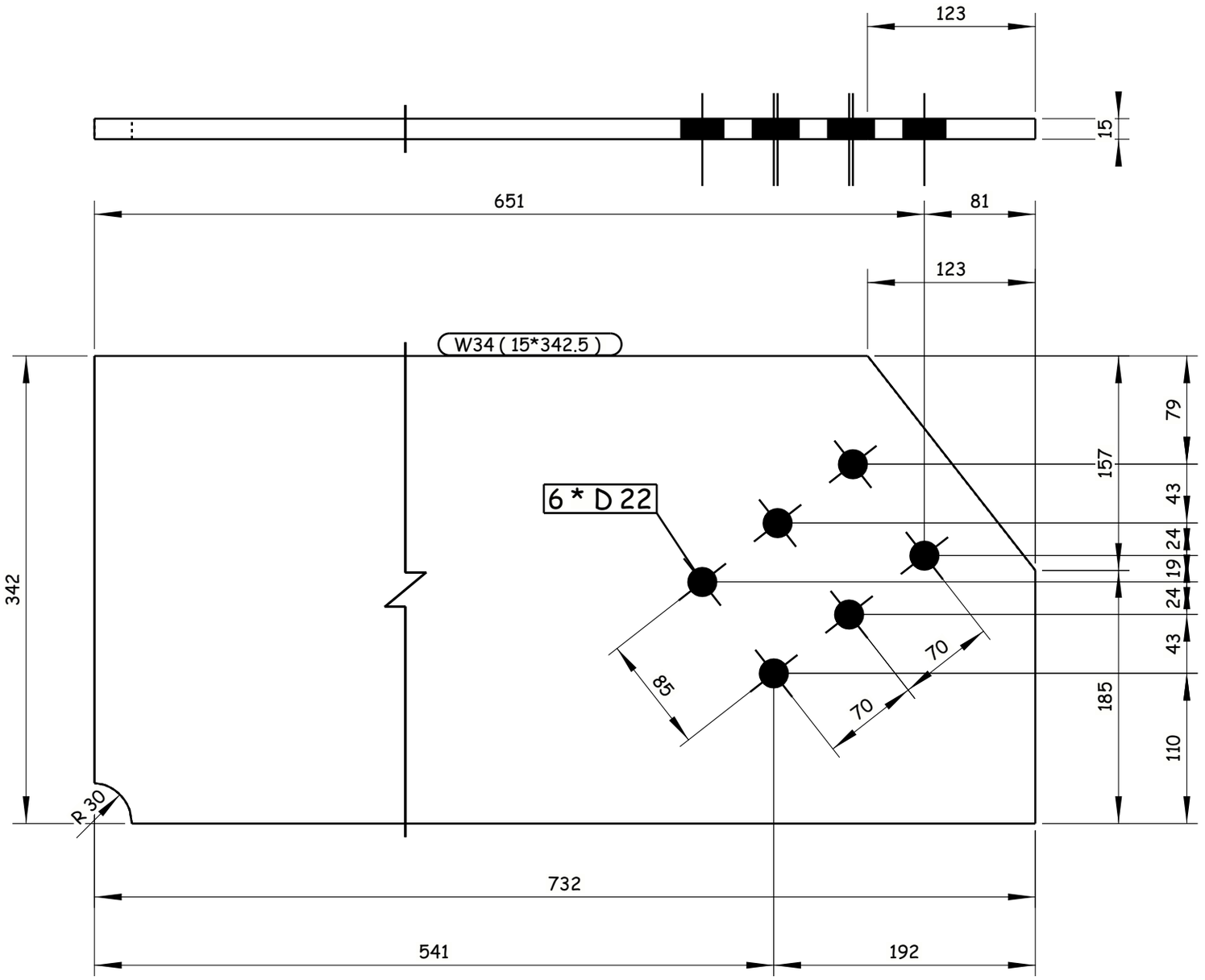

4 REQUIRED AS DRAWN E.SH W34

Tekla structures

GENERAL NOTES:

1. ALL DIMENSIONS ARE IN MILLIMETERS UNLESS OTHERWISE SPECIFIED.
2. LEVELS ARE IN METERS
3. DESIGN SERVICE LIFE OF 100 YEARS.
4. FLANGES OF TOP AND BOTTOM CHORDS TO BE SUPPLIED WITH IMPROVED THROUGH THICKNESS PROPERTIES Z25 ACCORDING TO EN10164.

REFERENCE DRAWINGS

1	93M-0407-SEN-6OL11-END-10118-B PAGE 01:17
2	
3	
4	
5	
6	
7	
8	
9	
10	
11	

6TH OF OCTOBER CITY RAIL TRANSIT MONORAIL &
NEW CAPITAL CITY RAIL TRANSIT MONORAIL

The Authority — Hill International — Authority Consultant
ORASCOM CONSTRUCTION — Main Contractor
BOMBARDIER
SENER / SHAKER CONSULTANCY GROUP — Designer

CONTRACTOR & CONSULTANT:
EHC ENGINEERING HOUSE FOR CONSULTANCY

6 October Monorail
Engineering Unit
Valid For Construction

SCALE	SHOP DRAWING	DATE
AS SHOWN		20.11.2024

DRAWING TITLE:
6TH OF OCTOBER MONORAIL
SHOP DRAWING FOR BRIDGE 6OL11-37
STEEL TRUSS (II).
W34

REV	DATE	BY	DESCRIPTION	CHK	APD
A	20-11-24	E.SH	ISSUE FOR APPROVAL	A.SH	M.M

Project Code	Rubric	Initiator	Lot	Ref	Number	Revision
93M	0407	AAC	60L11	DWG	90359	A

-Drawing shall be updated according to the comments on the GA drawing.
-Approval is subjected to the approval of coordination package between multi-discipline.

REVIEWED WITH COMMENT
MONORAILS PROJECT

All holes are 22mm U.N.O Length & Area & Weight per piece

Mark	Profile	Grade	QTY	Length	Area	Weight
W35	PL15*342.5	S355J2N	2	727.3	0.51	28.1

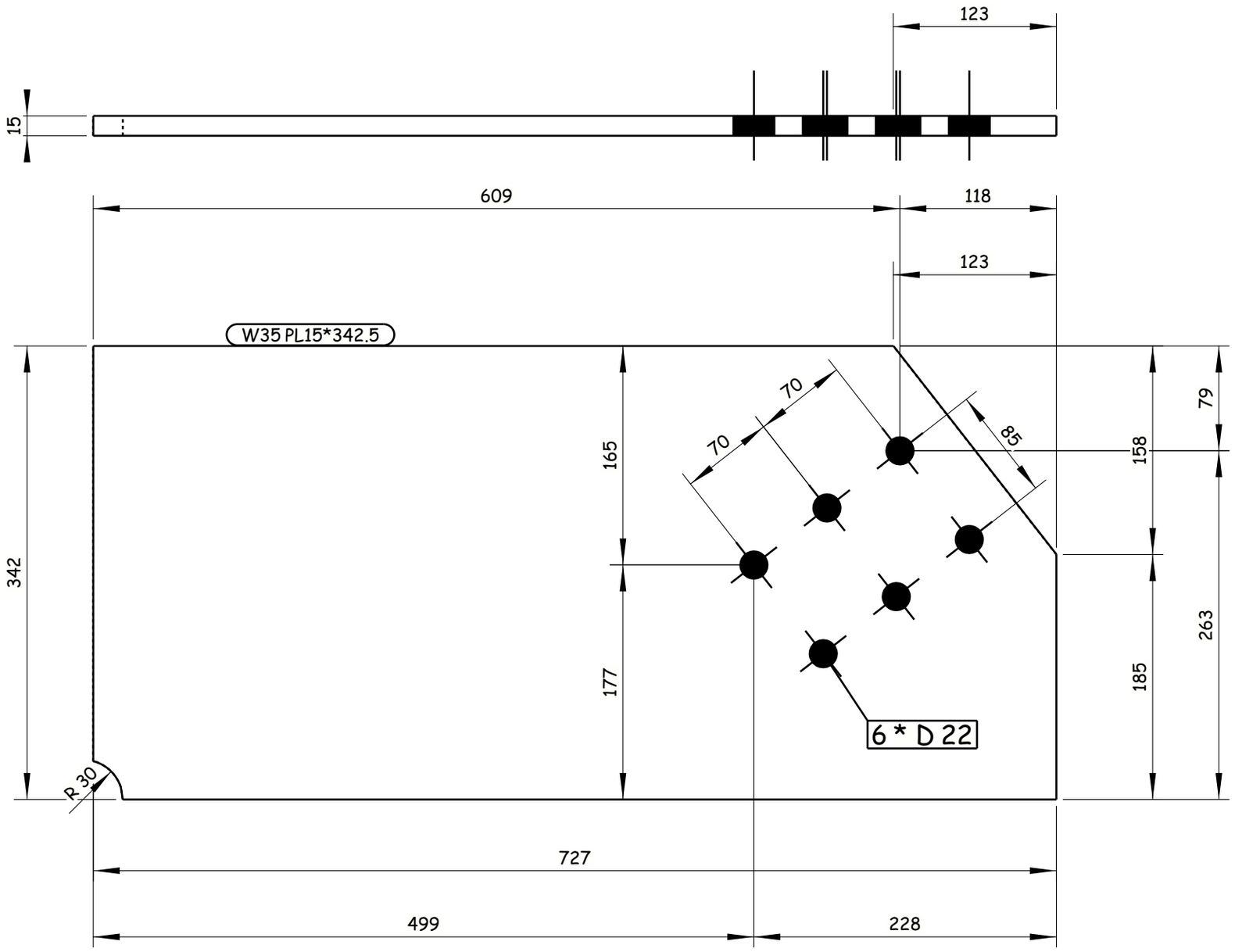

2 REQUIRED AS DRAWN E.SH W35

GENERAL NOTES:

1. ALL DIMENSIONS ARE IN MILLIMETERS UNLESS OTHERWISE SPECIFIED.
2. LEVELS ARE IN METERS
3. DESIGN SERVICE LIFE OF 100 YEARS.
4. FLANGES OF TOP AND BOTTOM CHORDS TO BE SUPPLIED WITH IMPROVED THROUGH THICKNESS PROPERTIES Z25 ACCORDING TO EN10164.

REFERENCE DRAWINGS

1	93M-0407-SEN-6OL11-END-10118-B PAGE 01:17
2	
3	
4	
5	
6	
7	
8	
9	
10	
11	

6TH OF OCTOBER CITY RAIL TRANSIT MONORAIL &
NEW CAPITAL CITY RAIL TRANSIT MONORAIL

The Authority — Hill International Authority Consultant | ORASCOM CONSTRUCTION — BOMBARDIER — Main Contractor | SENER — SHAKER CONSULTANCY GROUP — Designer

CONTRACTOR / CONSULTANT : EHC ENGINEERING HOUSE FOR CONSULTANCY

SCALE: AS SHOWN | SHOP DRAWING | DATE: 20.11.2024

REV	DATE	BY	DESCRIPTION	CHK	APD
A	20-11-24	E.SH	ISSUE FOR APPROVAL	A.SH	M.M

6 October Monorail
Engineering Unit
Valid For Construction

DRAWING TITLE:
6TH OF OCTOBER MONORAIL
SHOP DRAWING FOR BRIDGE 6OL11-37
STEEL TRUSS (II).
W35

Project Code	Rubric	Initiator	Lot	Ref	Number	Revision
9 3 M 0	4 0 7	A A C	6 0 L 1 1	D W G	90360	A

Tekla structures

-Drawing shall be updated according to the comments on the GA drawing.
-Approval is subjected to the approval of coordination package between multi-discipline.

REVIEWED WITH COMMENT
MONORAILS PROJECT

All holes are 22mm U.N.O Length & Area & Weight per piece

Mark	Profile	Grade	QTY	Length	Area	Weight
W36	PL15*342.5	S355J2N	2	727.3	0.51	28.1

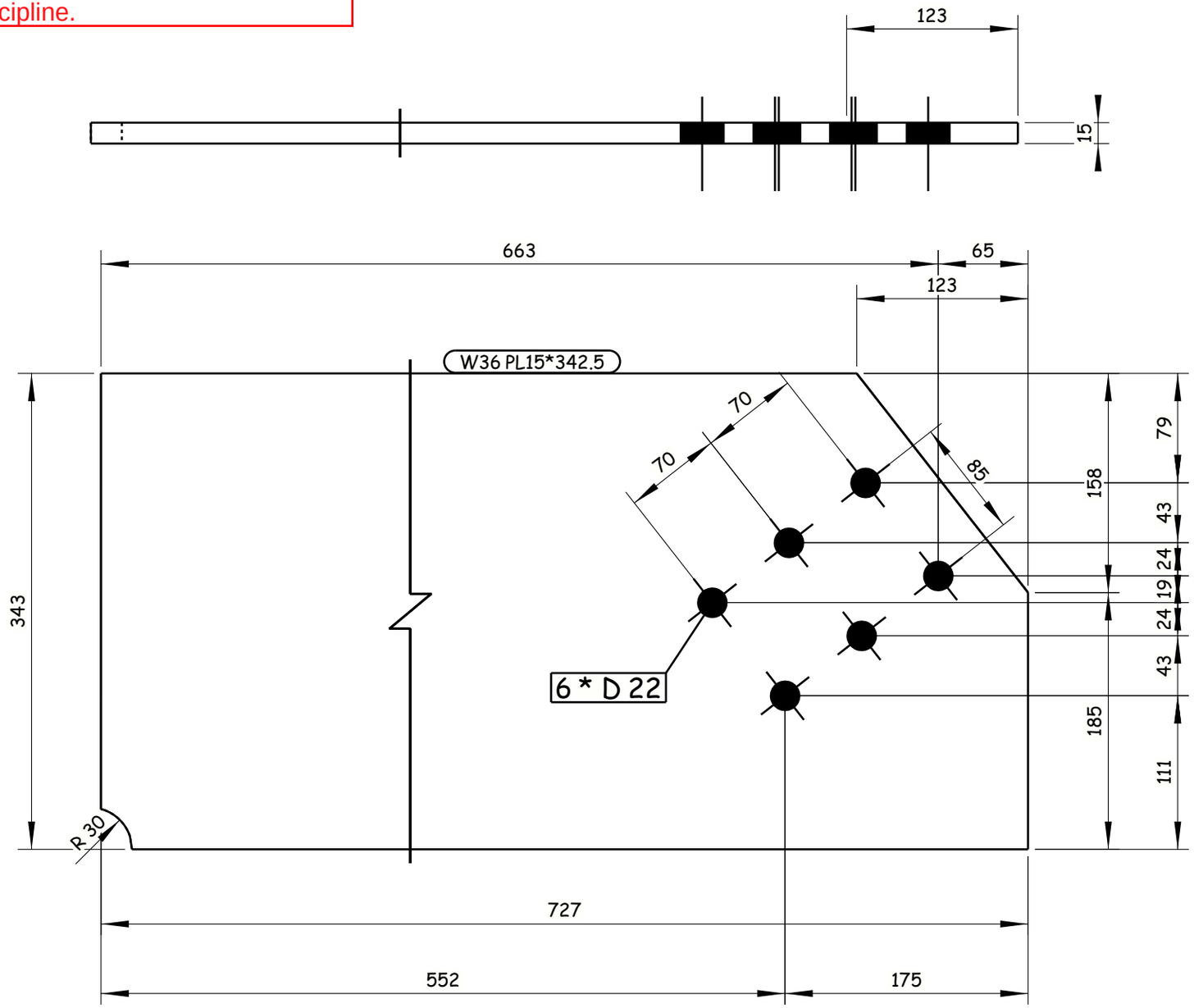

2 REQUIRED AS DRAWN E.SH W36

GENERAL NOTES:

1. ALL DIMENSIONS ARE IN MILLIMETERS UNLESS OTHERWISE SPECIFIED.
2. LEVELS ARE IN METERS
3. DESIGN SERVICE LIFE OF 100 YEARS.
4. FLANGES OF TOP AND BOTTOM CHORDS TO BE SUPPLIED WITH IMPROVED THROUGH THICKNESS PROPERTIES Z25 ACCORDING TO EN10164.

REFERENCE DRAWINGS

1	93M-0407-SEN-6OL11-END-10118-B PAGE 01:17
2	
3	
4	
5	
6	
7	
8	
9	
10	
11	

6TH OF OCTOBER CITY RAIL TRANSIT MONORAIL &
NEW CAPITAL CITY RAIL TRANSIT MONORAIL

The Authority — Hill International Authority Consultant — Main Contractor — Designer

CONTRACTOR CONSULTANT: ENGINEERING HOUSE FOR CONSULTANCY

6 October Monorail Engineering Unit
Valid For Construction

REV	DATE	BY	DESCRIPTION	CHK	APD
A	20-11-24	E.SH	ISSUE FOR APPROVAL	A.SH	M.M

SCALE: AS SHOWN | SHOP DRAWING | DATE: 20.11.2024

DRAWING TITLE:
6TH OF OCTOBER MONORAIL
SHOP DRAWING FOR BRIDGE 6OL11-37
STEEL TRUSS (II).
W36

Project Code	Rubric	Initiator	Lot	Ref	Number	Revision
9 3 M	0 4 0 7	A A C	6 0 L 1 1	D W G	90361	A

Tekla structures

-Drawing shall be updated according to the comments on the GA drawing.
-Approval is subjected to the approval of coordination package between multi-discipline.

REVIEWED WITH COMMENT
MONORAILS PROJECT

All holes are 22mm U.N.O Length & Area & Weight per piece

Mark	Profile	Grade	QTY	Length	Area	Weight
W37	PL15*342.5	S355J2N	6	732.5	0.51	28.3

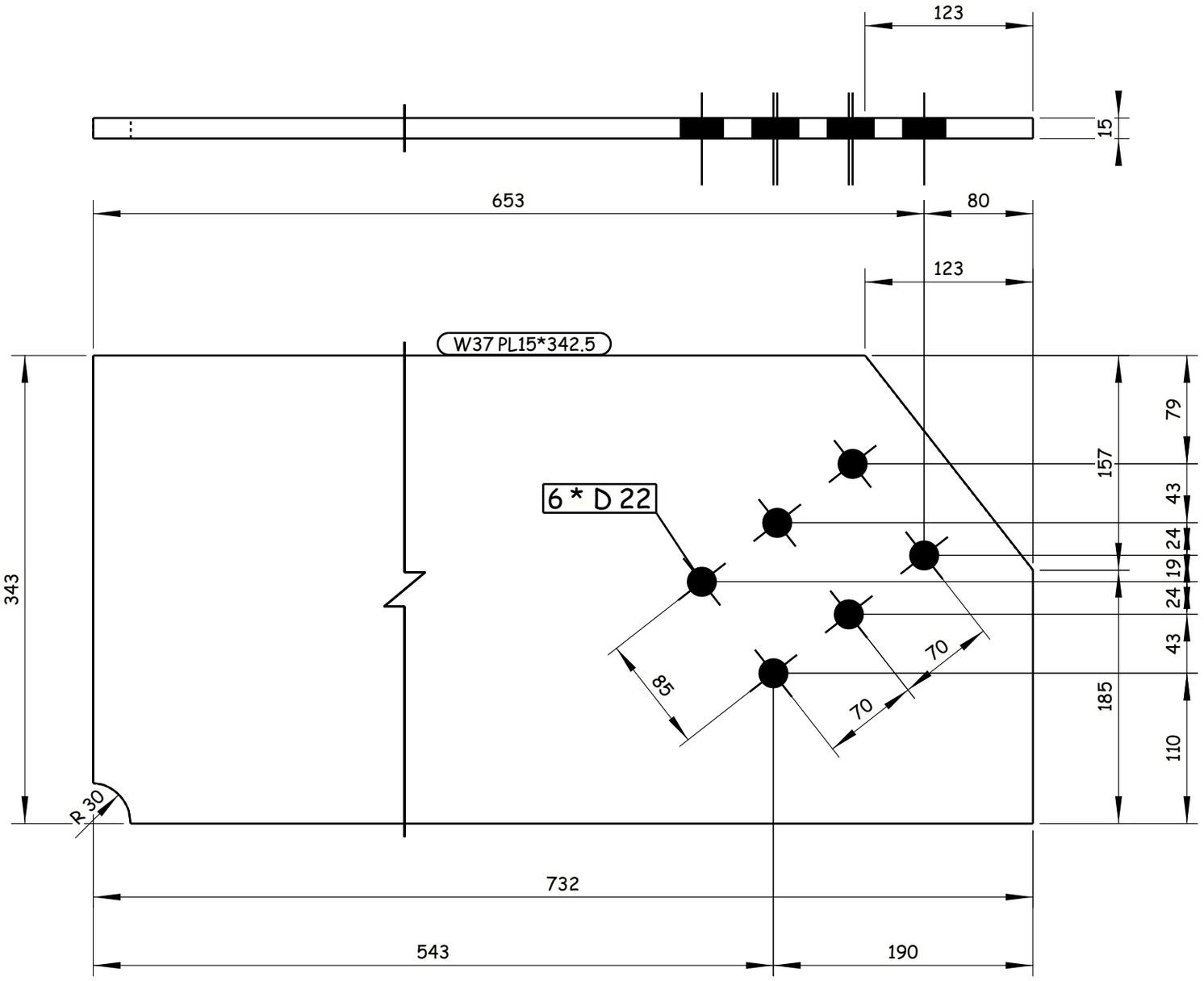

6 REQUIRED AS DRAWN E.SH W37

GENERAL NOTES:

1. ALL DIMENSIONS ARE IN MILLIMETERS UNLESS OTHERWISE SPECIFIED.
2. LEVELS ARE IN METERS
3. DESIGN SERVICE LIFE OF 100 YEARS.
4. FLANGES OF TOP AND BOTTOM CHORDS TO BE SUPPLIED WITH IMPROVED THROUGH THICKNESS PROPERTIES Z25 ACCORDING TO EN10164.

REFERENCE DRAWINGS

1	93M-0407-SEN-6OL11-END-10118-B PAGE 01:17
2	
3	
4	
5	
6	
7	
8	
9	
10	
11	

6TH OF OCTOBER CITY RAIL TRANSIT MONORAIL &
NEW CAPITAL CITY RAIL TRANSIT MONORAIL

The Authority
Hill International
Authority Consultant

ORASCOM CONSTRUCTION
BOMBARDIER
Main Contractor

SENER
SHAKER CONSULTANCY GROUP
Designer

CONTRACTOR & CONSULTANT:
EHC
ENGINEERING HOUSE FOR CONSULTANCY

6 October Monorail
Engineering Unit
Valid For Construction

SCALE	SHOP DRAWING	DATE
AS SHOWN		20.11.2024

DRAWING TITLE:
6TH OF OCTOBER MONORAIL
SHOP DRAWING FOR BRIDGE 6OL11-37
STEEL TRUSS (II).
W37

REV	DATE	BY	DESCRIPTION	CHK	APD
A	20-11-24	E.SH	ISSUE FOR APPROVAL	A.SH	M.M

Project Code	Rubric	Initiator	Lot	Ref	Number	Revision
93M	0407	AAC	60L11	DWG	90362	A

Tekla structures

-Drawing shall be updated according to the comments on the GA drawing.
-Approval is subjected to the approval of coordination package between multi-discipline.

REVIEWED WITH COMMENT
MONORAILS PROJECT

All holes are 22mm U.N.O Length & Area & Weight per piece						
W38	PL20*547.9	S355J2N	4	780.7	0.89	66.0
Mark	Profile	Grade	QTY	Length	Area	Weight

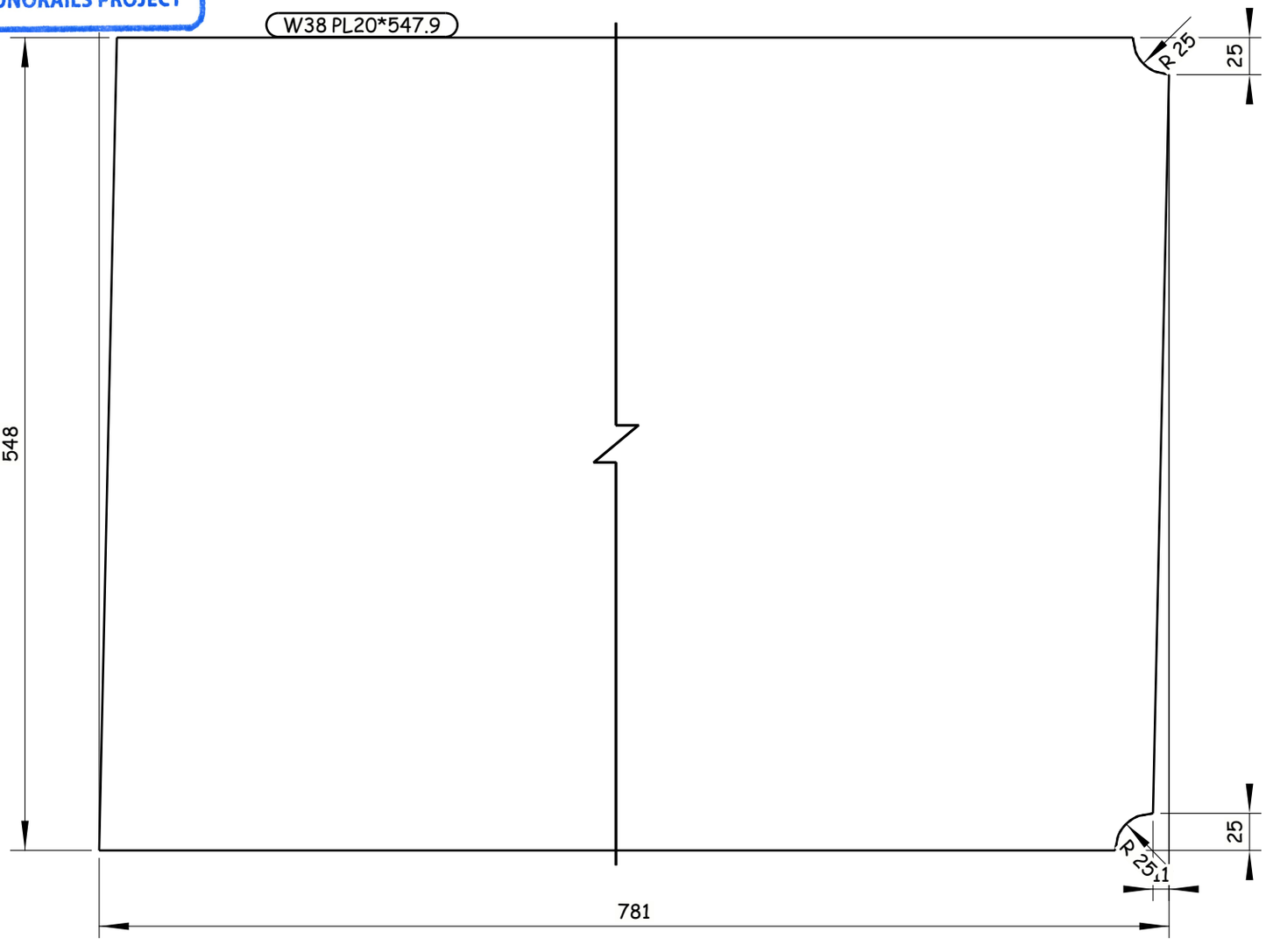

4 REQUIRED AS DRAWN E.SH W38

GENERAL NOTES:

1. ALL DIMENSIONS ARE IN MILLIMETERS UNLESS OTHERWISE SPECIFIED.
2. LEVELS ARE IN METERS
3. DESIGN SERVICE LIFE OF 100 YEARS.
4. FLANGES OF TOP AND BOTTOM CHORDS TO BE SUPPLIED WITH IMPROVED THROUGH THICKNESS PROPERTIES Z25 ACCORDING TO EN10164.

REFERENCE DRAWINGS

1	93M-0407-SEN-6OL11-END-10118-B PAGE 01:17
2	
3	
4	
5	
6	
7	
8	
9	
10	
11	

6TH OF OCTOBER CITY RAIL TRANSIT MONORAIL &
NEW CAPITAL CITY RAIL TRANSIT MONORAIL

The Authority
Hill International
Authority Consultant

Main Contractor

Designer

CONTRACTOR & CONSULTANT:
ENGINEERING HOUSE FOR CONSULTANCY

SCALE: AS SHOWN | SHT/DRAWING | DATE: 20.11.2024

REV	DATE	BY	DESCRIPTION	CHK	APD
A	20-11-24	E.SH	ISSUE FOR APPROVAL	A.SH	M.M

6 October: Monorail
Engineering Unit
Valid For Construction

DRAWING TITLE:
6TH OF OCTOBER MONORAIL
SHOP DRAWING FOR BRIDGE 6OL11-37
STEEL TRUSS (II).
W38

Project Code	Rubric	Initiator	Lot	Ref	Number	Revision
93M	0407	AAC	60L11	DWG	90363	A

Tekla structures

-Drawing shall be updated according to the comments on the GA drawing.
-Approval is subjected to the approval of coordination package between multi-discipline.

REVIEWED WITH COMMENT
MONORAILS PROJECT

All holes are 22mm U.N.O Length & Area & Weight per piece

Mark	Profile	Grade	QTY	Length	Area	Weight
W39	FLT25*400	S355J2N	2	3870.0	3.31	303.8

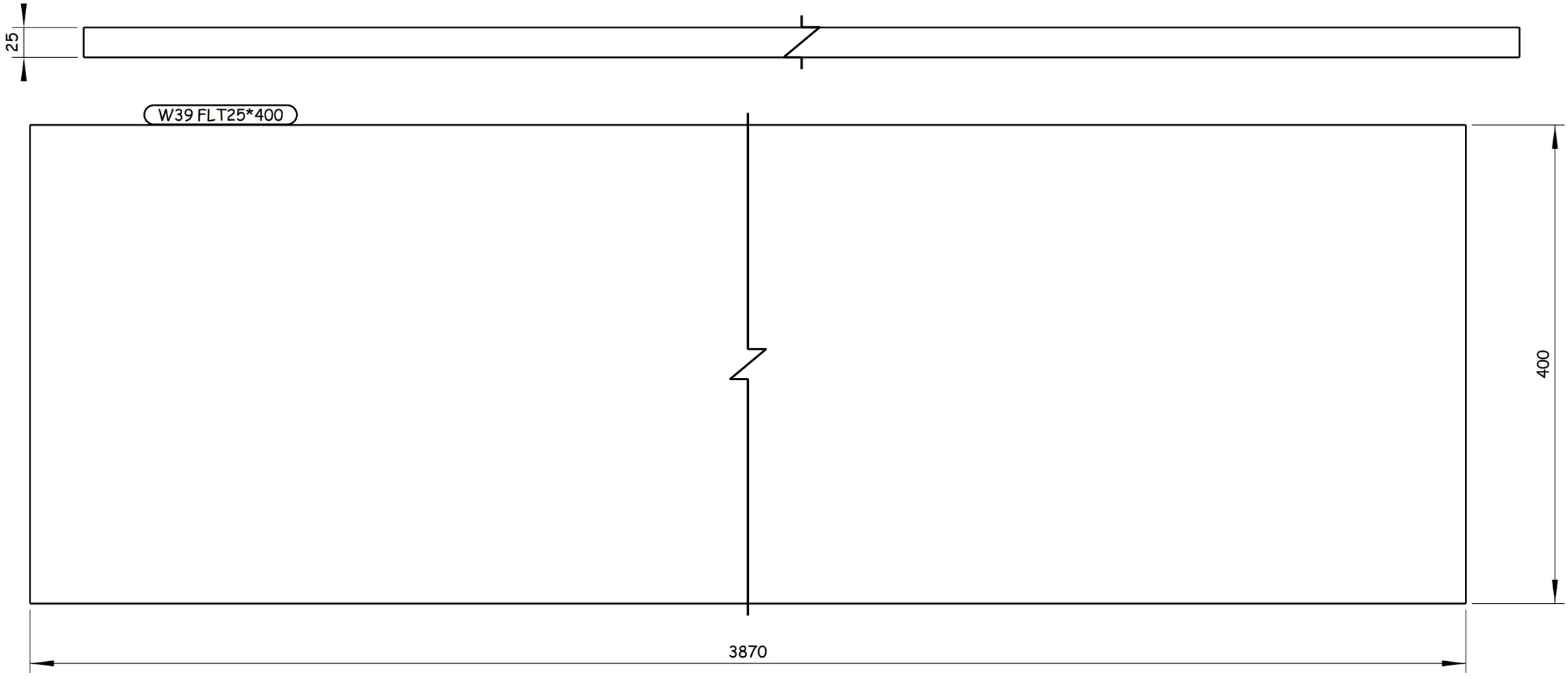

2 REQUIRED AS DRAWN E.SH W39

GENERAL NOTES:

1. ALL DIMENSIONS ARE IN MILLIMETERS UNLESS OTHERWISE SPECIFIED.
2. LEVELS ARE IN METERS
3. DESIGN SERVICE LIFE OF 100 YEARS.
4. FLANGES OF TOP AND BOTTOM CHORDS TO BE SUPPLIED WITH IMPROVED THROUGH THICKNESS PROPERTIES Z25 ACCORDING TO EN10164.

REFERENCE DRAWINGS

1	93M-0407-SEN-6OL11-END-10118-B PAGE 01:17
2	
3	
4	
5	
6	
7	
8	
9	
10	
11	

6TH OF OCTOBER CITY RAIL TRANSIT MONORAIL &
NEW CAPITAL CITY RAIL TRANSIT MONORAIL

The Authority
Hill International
Authority Consultant

ORASCOM CONSTRUCTION
Main Contractor

BOMBARDIER
SENER
SHAKER CONSULTANCY GROUP
Designer

CONTRACTOR & CONSULTANT:
ENGINEERING HOUSE FOR CONSULTANCY

SCALE: AS SHOWN | CHK'D DRAWING | DATE: 20.11.2024

REV	DATE	BY	DESCRIPTION	CHK	APD
A	20-11-24	E.SH	ISSUE FOR APPROVAL	A.SH	M.M

6 October: Monorail
Engineering Unit
Valid For Construction

DRAWING TITLE:
6TH OF OCTOBER MONORAIL
SHOP DRAWING FOR BRIDGE 6OL11-37
STEEL TRUSS (II).
W39

Project Code	Rubric	Initiator	Lot	Ref	Number	Revision
93M	0407	AAC	60L11	DWG	90364	A

Tekla structures

-Drawing shall be updated according to the comments on the GA drawing.
-Approval is subjected to the approval of coordination package between multi-discipline.

REVIEWED WITH COMMENT
MONORAILS PROJECT

All holes are 22mm U.N.O Length & Area & Weight per piece

Mark	Profile	Grade	QTY	Length	Area	Weight
W40	FLT25*350	S355J2N	16	1000.0	0.52	44.9

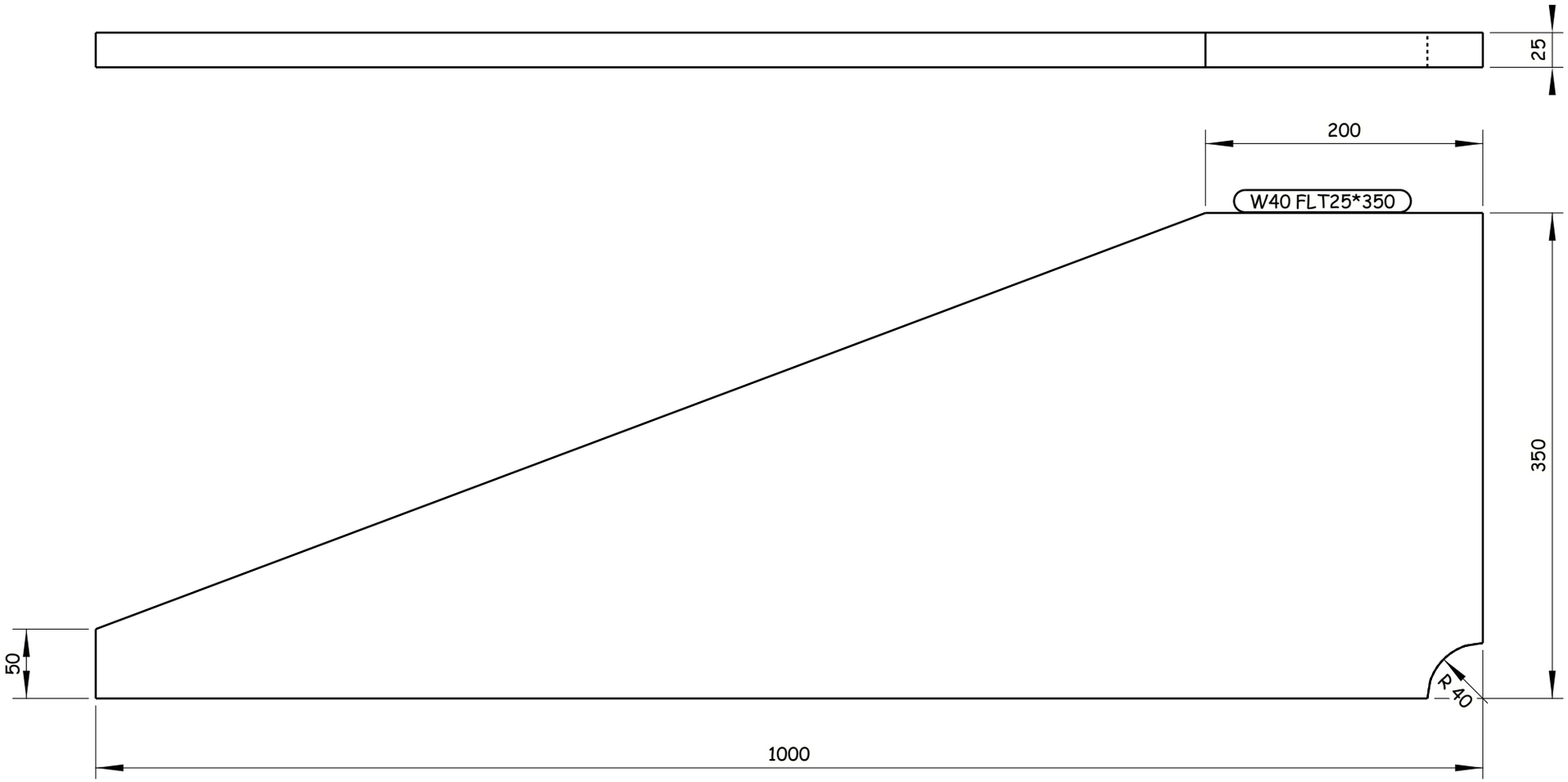

16 REQUIRED AS DRAWN E.SH W40

Tekla structures

GENERAL NOTES:

1. ALL DIMENSIONS ARE IN MILLIMETERS UNLESS OTHERWISE SPECIFIED.
2. LEVELS ARE IN METERS
3. DESIGN SERVICE LIFE OF 100 YEARS.
4. FLANGES OF TOP AND BOTTOM CHORDS TO BE SUPPLIED WITH IMPROVED THROUGH THICKNESS PROPERTIES Z25 ACCORDING TO EN10164.

REFERENCE DRAWINGS

1	93M-0407-SEN-6OL11-END-10118-B PAGE 01:17
2	
3	
4	
5	
6	
7	
8	
9	
10	
11	

6TH OF OCTOBER CITY RAIL TRANSIT MONORAIL &
NEW CAPITAL CITY RAIL TRANSIT MONORAIL

The Authority
Hill International
Authority Consultant

Main Contractor

Designer

CONTRACTOR & CONSULTANT:
ENGINEERING HOUSE FOR CONSULTANCY

SCALE: AS SHOWN | CHK'D DRAWING | DATE: 20.11.2024

REV	DATE	BY	DESCRIPTION	CHK	APD
A	20-11-24	E.SH	ISSUE FOR APPROVAL	A.SH	M.M

6 October Monorail
Engineering Unit
Valid For Construction

DRAWING TITLE:
6TH OF OCTOBER MONORAIL
SHOP DRAWING FOR BRIDGE 6OL11-37
STEEL TRUSS (II).
W40

Project Code	Rubric	Initiator	Lot	Ref	Number	Revision
9 3 M	0 4 0 7	A A C	6 0 L 1 1	D W G	90365	A

-Drawing shall be updated according to the comments on the GA drawing.
-Approval is subjected to the approval of coordination package between multi-discipline.

REVIEWED WITH COMMENT
MONORAILS PROJECT

All holes are 22mm U.N.O Length & Area & Weight per piece						
W41	PL25*915	S355J2N	4	1000.0	1.77	164.9
Mark	Profile	Grade	QTY	Length	Area	Weight

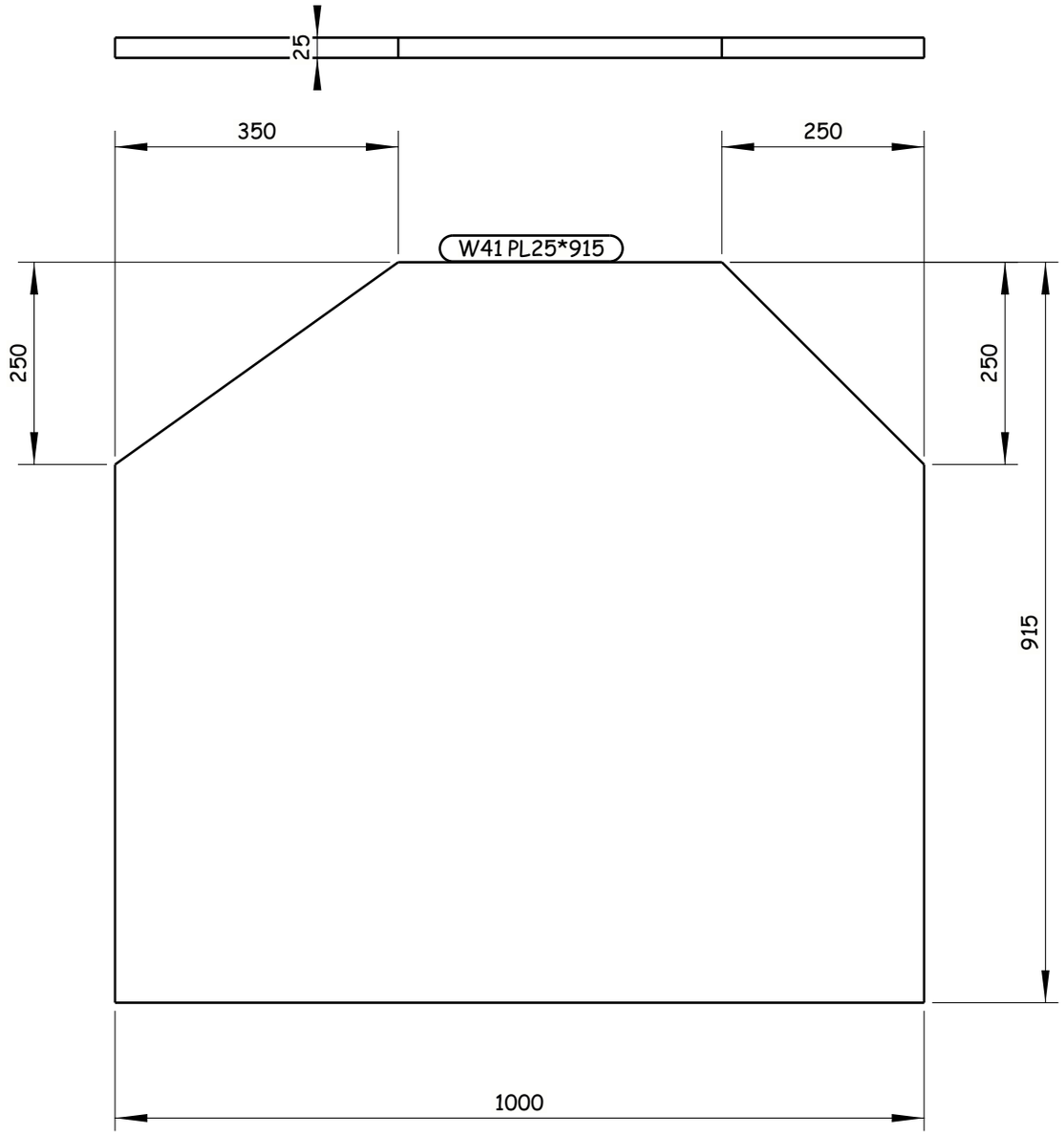

4 REQUIRED AS DRAWN E.SH W41

GENERAL NOTES:

1. ALL DIMENSIONS ARE IN MILLIMETERS UNLESS OTHERWISE SPECIFIED.
2. LEVELS ARE IN METERS
3. DESIGN SERVICE LIFE OF 100 YEARS.
4. FLANGES OF TOP AND BOTTOM CHORDS TO BE SUPPLIED WITH IMPROVED THROUGH THICKNESS PROPERTIES Z25 ACCORDING TO EN10164.

REFERENCE DRAWINGS

1	93M-0407-SEN-6OL11-END-10118-B PAGE 01:17
2	
3	
4	
5	
6	
7	
8	
9	
10	
11	

6TH OF OCTOBER CITY RAIL TRANSIT MONORAIL &
NEW CAPITAL CITY RAIL TRANSIT MONORAIL

The Authority
Hill International
Authority Consultant

ORASCOM CONSTRUCTION
Main Contractor

BOMBARDIER
SENER
SHAKER CONSULTANCY GROUP
Designer

CONTRACTOR / CONSULTANT :
ENGINEERING HOUSE FOR CONSULTANCY

SCALE	SHOP DRAWING	DATE
AS SHOWN		20.11.2024

REV	DATE	BY	DESCRIPTION	CHK	APD
A	20-11-24	E.SH	ISSUE FOR APPROVAL	A.SH	M.M

6 October Monorail
Engineering Unit
Valid For Construction

DRAWING TITLE:
6TH OF OCTOBER MONORAIL
SHOP DRAWING FOR BRIDGE 6OL11-37
STEEL TRUSS (II).
W41

Project Code	Rubric	Initiator	Lot	Ref	Number	Revision
9 3 M	0 4 0 7	A A C	6 0 L 1 1	D W G	90366	A

Tekla structures

-Drawing shall be updated according to the comments on the GA drawing.
-Approval is subjected to the approval of coordination package between multi-discipline.

REVIEWED WITH COMMENT
MONORAILS PROJECT

All holes are 22mm U.N.O Length & Area & Weight per piece

Mark	Profile	Grade	QTY	Length	Area	Weight
W42	PL60*800	S355K2N	4	800.0	1.15	234.8

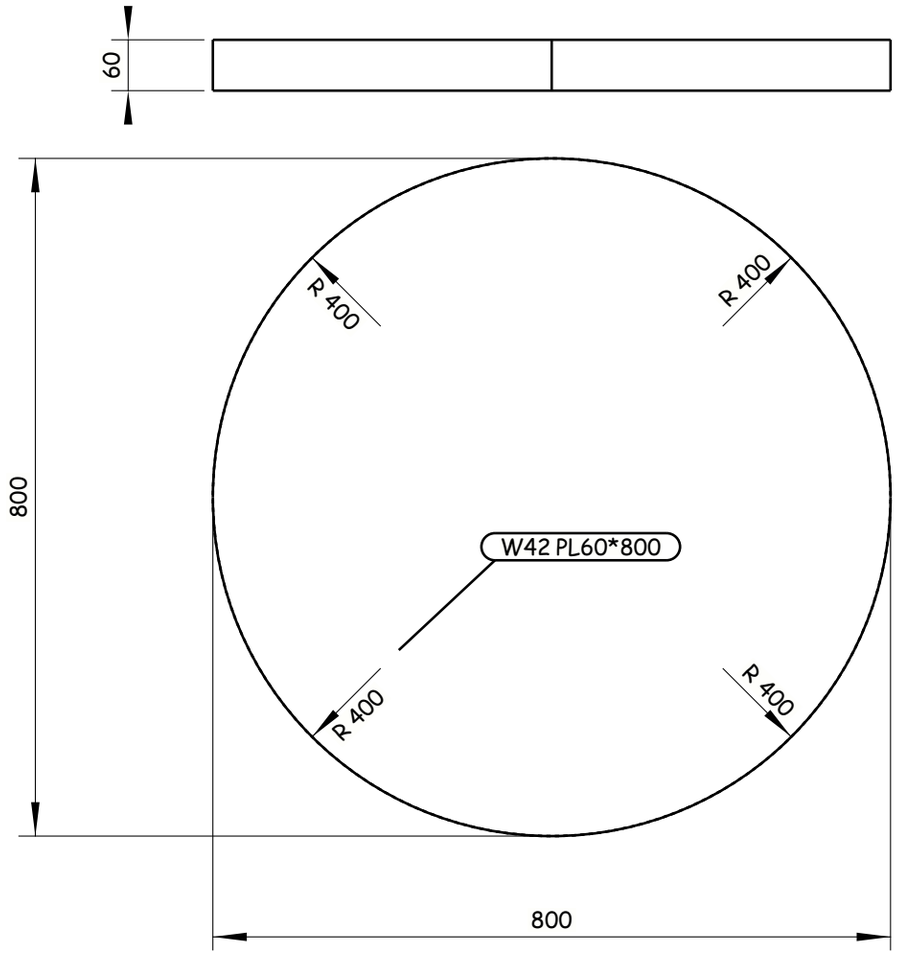

4 REQUIRED AS DRAWN E.SH W42

Tekla structures

GENERAL NOTES:
1. ALL DIMENSIONS ARE IN MILLIMETERS UNLESS OTHERWISE SPECIFIED.
2. LEVELS ARE IN METERS
3. DESIGN SERVICE LIFE OF 100 YEARS.
4. FLANGES OF TOP AND BOTTOM CHORDS TO BE SUPPLIED WITH IMPROVED THROUGH THICKNESS PROPERTIES Z25 ACCORDING TO EN10164.

REFERENCE DRAWINGS

1	93M-0407-SEN-6OL11-END-10118-B PAGE 01:17
2	
3	
4	
5	
6	
7	
8	
9	
10	
11	

6TH OF OCTOBER CITY RAIL TRANSIT MONORAIL &
NEW CAPITAL CITY RAIL TRANSIT MONORAIL

The Authority
Hill International
Authority Consultant

ORASCOM CONSTRUCTION
BOMBARDIER
Main Contractor

SENER
SHAKER CONSULTANCY GROUP
Designer

CONTRACTOR / CONSULTANT:
ENGINEERING HOUSE FOR CONSULTANCY

6 October Monorail
Engineering Unit
Valid For Construction

REV	DATE	BY	DESCRIPTION	CHK	APD
A	20-11-24	E.SH	ISSUE FOR APPROVAL	A.SH	M.M

SCALE: AS SHOWN | SHD DRAWING | DATE: 20.11.2024

DRAWING TITLE:
6TH OF OCTOBER MONORAIL
SHOP DRAWING FOR BRIDGE 6OL11-37
STEEL TRUSS (II).
W42

Project Code	Rubric	Initiator	Lot	Ref	Number	Revision
93M	04 07	AAC	60 L11	DWG	90367	A

-Drawing shall be updated according to the comments on the GA drawing.
-Approval is subjected to the approval of coordination package between multi-discipline.

REVIEWED WITH COMMENT
MONORAILS PROJECT

All holes are 22mm U.N.O Length & Area & Weight per piece

Mark	Profile	Grade	QTY	Length	Area	Weight
W43	FLT25*200	S355J2N	16	1375.0	0.63	54.0

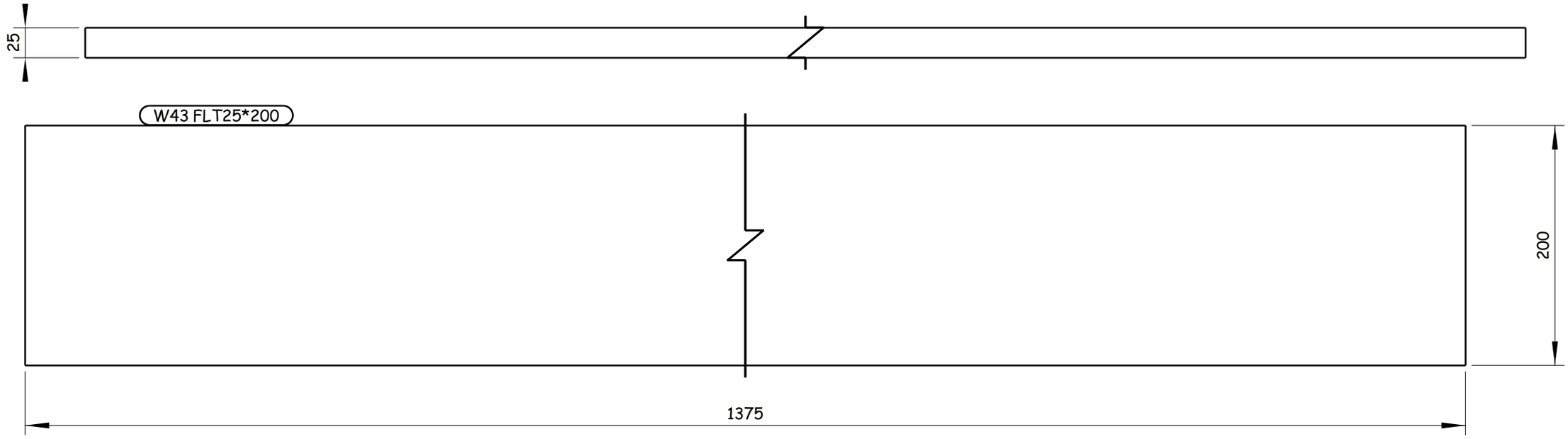

16 REQUIRED AS DRAWN E.SH W43

GENERAL NOTES:

1. ALL DIMENSIONS ARE IN MILLIMETERS UNLESS OTHERWISE SPECIFIED.
2. LEVELS ARE IN METERS
3. DESIGN SERVICE LIFE OF 100 YEARS.
4. FLANGES OF TOP AND BOTTOM CHORDS TO BE SUPPLIED WITH IMPROVED THROUGH THICKNESS PROPERTIES Z25 ACCORDING TO EN10164.

REFERENCE DRAWINGS

1	93M-0407-SEN-6OL11-END-10118-B PAGE 01:17
2	
3	
4	
5	
6	
7	
8	
9	
10	
11	

6TH OF OCTOBER CITY RAIL TRANSIT MONORAIL &
NEW CAPITAL CITY RAIL TRANSIT MONORAIL

The Authority
Hill International
Authority Consultant

ORASCOM CONSTRUCTION
Main Contractor

BOMBARDIER
SENER
SHAKER CONSULTANCY GROUP
Designer

CONTRACTOR & CONSULTANT:
ENGINEERING HOUSE FOR CONSULTANCY

SCALE: AS SHOWN | CHK'D DRAWING | DATE: 20.11.2024

REV	DATE	BY	DESCRIPTION	CHK	APD
A	20-11-24	E.SH	ISSUE FOR APPROVAL	A.SH	M.M

6 October: Monorail
Engineering Unit
Valid For Construction

DRAWING TITLE:
6TH OF OCTOBER MONORAIL
SHOP DRAWING FOR BRIDGE 6OL11-37
STEEL TRUSS (II).
W43

Project Code	Rubric	Initiator	Lot	Ref	Number	Revision
9 3 M	0 4 0 7	A A C	6 0 L 1 1	D W G	90368	A

Tekla structures

-Drawing shall be updated according to the comments on the GA drawing.
-Approval is subjected to the approval of coordination package between multi-discipline.

REVIEWED WITH COMMENT
MONORAILS PROJECT

All holes are 22mm U.N.O Length & Area & Weight per piece

Mark	Profile	Grade	QTY	Length	Area	Weight
W44	FLT25*200	S355J2N	8	970.0	0.45	38.1

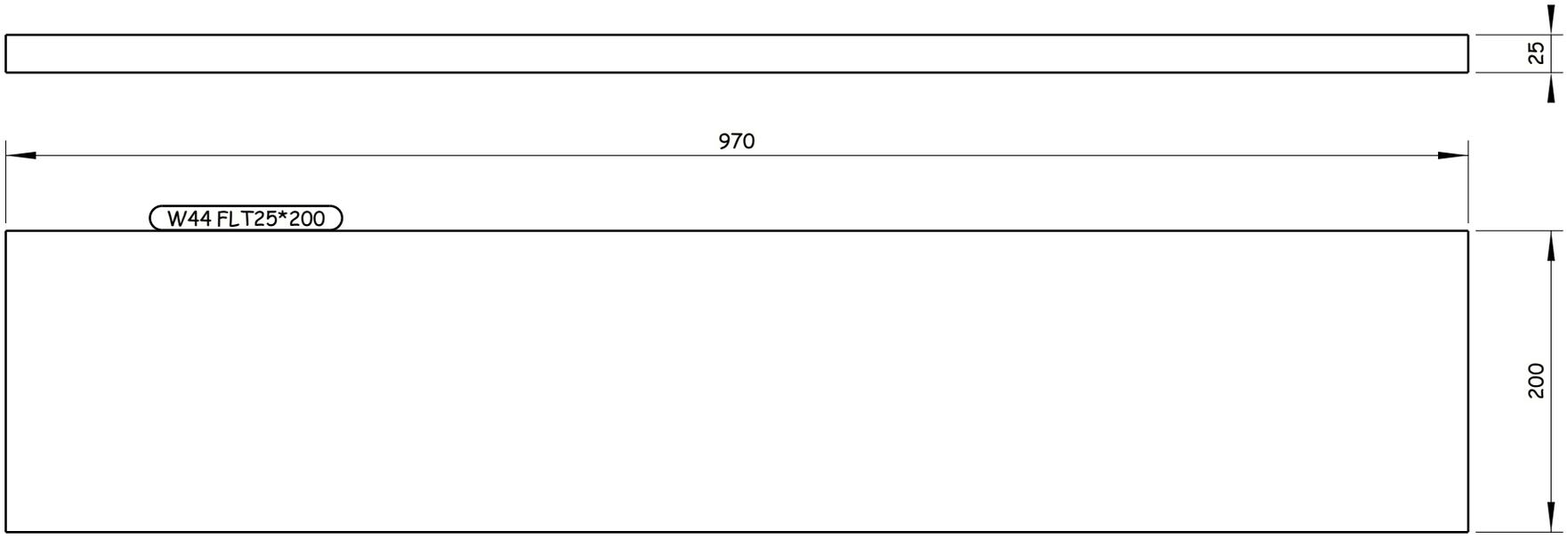

8 REQUIRED AS DRAWN E.SH W44

Tekla structures

GENERAL NOTES:

1. ALL DIMENSIONS ARE IN MILLIMETERS UNLESS OTHERWISE SPECIFIED.
2. LEVELS ARE IN METERS
3. DESIGN SERVICE LIFE OF 100 YEARS.
4. FLANGES OF TOP AND BOTTOM CHORDS TO BE SUPPLIED WITH IMPROVED THROUGH THICKNESS PROPERTIES Z25 ACCORDING TO EN10164.

REFERENCE DRAWINGS

1	93M-0407-SEN-6OL11-END-10118-B PAGE 01:17
2	
3	
4	
5	
6	
7	
8	
9	
10	
11	

6TH OF OCTOBER CITY RAIL TRANSIT MONORAIL &
NEW CAPITAL CITY RAIL TRANSIT MONORAIL

The Authority
Hill International
Authority Consultant

Main Contractor

Designer

CONTRACTOR & CONSULTANT:
ENGINEERING HOUSE FOR CONSULTANCY

SCALE: AS SHOWN | CHK'D DRAWING | DATE: 20.11.2024

REV	DATE	BY	DESCRIPTION	CHK	APD
A	20-11-24	E.SH	ISSUE FOR APPROVAL	A.SH	M.M

6 October Monorail
Engineering Unit
Valid For Construction

DRAWING TITLE:
6TH OF OCTOBER MONORAIL
SHOP DRAWING FOR BRIDGE 6OL11-37
STEEL TRUSS (II).
W44

Project Code	Rubric	Initiator	Lot	Ref	Number	Revision
93M	0407	AAC	60L11	DWG	90369	A

-Drawing shall be updated according to the comments on the GA drawing.
-Approval is subjected to the approval of coordination package between multi-discipline.

REVIEWED WITH COMMENT
MONORAILS PROJECT

All holes are 22mm U.N.O Length & Area & Weight per piece

Mark	Profile	Grade	QTY	Length	Area	Weight
W45	FLT25*400	S355J2N	2	3400.0	2.91	266.9

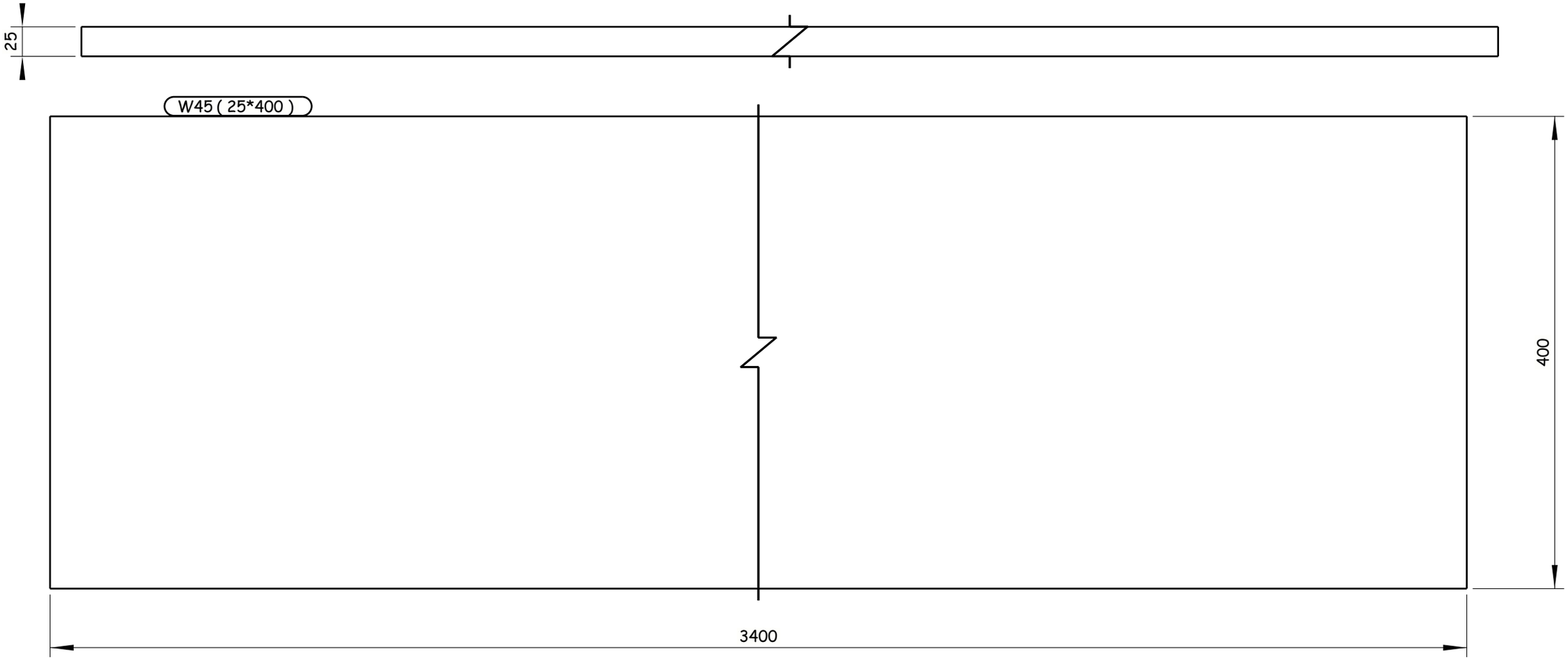

2 REQUIRED AS DRAWN E.SH W45

GENERAL NOTES:

1. ALL DIMENSIONS ARE IN MILLIMETERS UNLESS OTHERWISE SPECIFIED.
2. LEVELS ARE IN METERS
3. DESIGN SERVICE LIFE OF 100 YEARS.
4. FLANGES OF TOP AND BOTTOM CHORDS TO BE SUPPLIED WITH IMPROVED THROUGH THICKNESS PROPERTIES Z25 ACCORDING TO EN10164.

REFERENCE DRAWINGS

1	93M-0407-SEN-6OL11-END-10118-B PAGE 01:17
2	
3	
4	
5	
6	
7	
8	
9	
10	
11	

6TH OF OCTOBER CITY RAIL TRANSIT MONORAIL &
NEW CAPITAL CITY RAIL TRANSIT MONORAIL

The Authority
Hill International
Authority Consultant

Main Contractor

Designer

CONTRACTOR & CONSULTANT:
ENGINEERING HOUSE FOR CONSULTANCY

SCALE: AS SHOWN | CHK'D DRAWING | DATE: 20.11.2024

REV	DATE	BY	DESCRIPTION	CHK	APD
A	20-11-24	E.SH	ISSUE FOR APPROVAL	A.SH	M.M

6 October: Monorail
Engineering Unit
Valid For Construction

DRAWING TITLE:
6TH OF OCTOBER MONORAIL
SHOP DRAWING FOR BRIDGE 6OL11-37
STEEL TRUSS (II).
W45

Project Code	Rubric	Initiator	Lot	Ref	Number	Revision
9 3 M	0 4 0 7	A A C	6 0 L 1 1	D W G	90370	A

Tekla structures

-Drawing shall be updated according to the comments on the GA drawing.
-Approval is subjected to the approval of coordination package between multi-discipline.

REVIEWED WITH COMMENT
MONORAILS PROJECT

All holes are 22mm U.N.O Length & Area & Weight per piece						
W46	PL25*2150	S355J2N	2	4765.0	20.79	2002.2
Mark	Profile	Grade	QTY	Length	Area	Weight

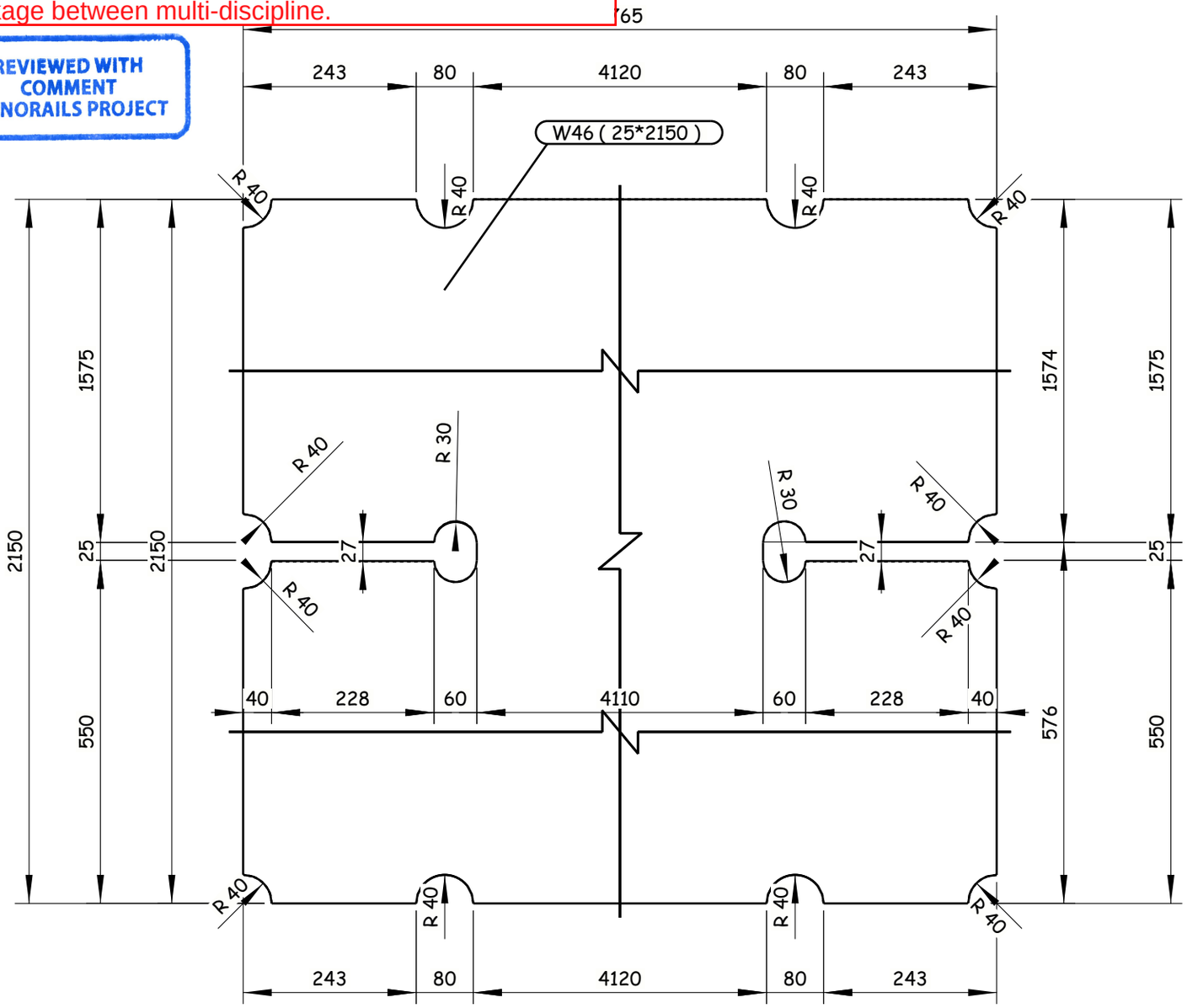

2 REQUIRED AS DRAWN E.SH W46

GENERAL NOTES:

1. ALL DIMENSIONS ARE IN MILLIMETERS UNLESS OTHERWISE SPECIFIED.
2. LEVELS ARE IN METERS
3. DESIGN SERVICE LIFE OF 100 YEARS.
4. FLANGES OF TOP AND BOTTOM CHORDS TO BE SUPPLIED WITH IMPROVED THROUGH THICKNESS PROPERTIES Z25 ACCORDING TO EN10164.

REFERENCE DRAWINGS

1	93M-0407-SEN-6OL11-END-10118-B PAGE 01:17
2	
3	
4	
5	
6	
7	
8	
9	
10	
11	

6TH OF OCTOBER CITY RAIL TRANSIT MONORAIL &
NEW CAPITAL CITY RAIL TRANSIT MONORAIL

The Authority — Hill International — Authority Consultant
ORASCOM CONSTRUCTION — Main Contractor
BOMBARDIER
SENER — SHAKER CONSULTANCY GROUP — Designer

CONTRACTOR & CONSULTANT:
ENGINEERING HOUSE FOR CONSULTANCY

6 October Monorail
Engineering Unit
Valid For Cönstruction

SCALE	SHOP DRAWING	DATE
AS SHOWN		20.11.2024

DRAWING TITLE:
6TH OF OCTOBER MONORAIL
SHOP DRAWING FOR BRIDGE 6OL11-37
STEEL TRUSS (II).
W46

REV	DATE	BY	DESCRIPTION	CHK	APD
A	20-11-24	E.SH	ISSUE FOR APPROVAL	A.SH	M.M

Project Code	Rubric	Initiator	Lot	Ref	Number	Revision
9 3 M	0 4 0 7	A A C	6 0 L 1 1	D W G	90371	A

Tekla structures

-Drawing shall be updated according to the comments on the GA drawing.
-Approval is subjected to the approval of coordination package between multi-discipline.

REVIEWED WITH COMMENT
MONORAILS PROJECT

All holes are 22mm U.N.O Length & Area & Weight per piece

Mark	Profile	Grade	QTY	Length	Area	Weight
W47	FLT50*300	S355K2N	4	300.0	0.18	27.0

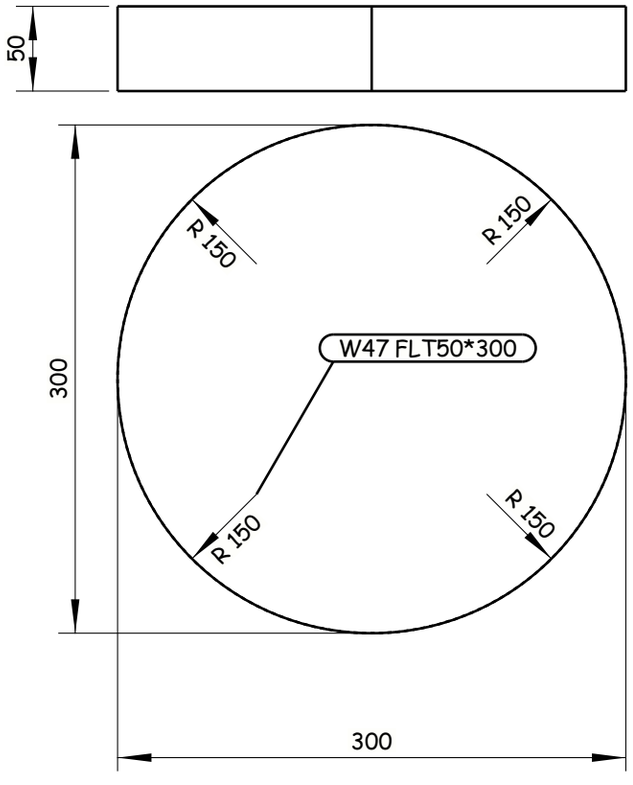

4 REQUIRED AS DRAWN E.SH W47

Tekla structures

GENERAL NOTES:

1. ALL DIMENSIONS ARE IN MILLIMETERS UNLESS OTHERWISE SPECIFIED.
2. LEVELS ARE IN METERS
3. DESIGN SERVICE LIFE OF 100 YEARS.
4. FLANGES OF TOP AND BOTTOM CHORDS TO BE SUPPLIED WITH IMPROVED THROUGH THICKNESS PROPERTIES Z25 ACCORDING TO EN10164.

REFERENCE DRAWINGS

1	93M-0407-SEN-6OL11-END-10118-B PAGE 01:17
2	
3	
4	
5	
6	
7	
8	
9	
10	
11	

6TH OF OCTOBER CITY RAIL TRANSIT MONORAIL &
NEW CAPITAL CITY RAIL TRANSIT MONORAIL

The Authority
Hill International
Authority Consultant

Main Contractor

Designer

CONTRACTOR & CONSULTANT:
ENGINEERING HOUSE FOR CONSULTANCY

SCALE: AS SHOWN | CHK'D DRAWING | DATE: 20.11.2024

REV	DATE	BY	DESCRIPTION	CHK	APD
A	20-11-24	E.SH	ISSUE FOR APPROVAL	A.SH	M.M

6 October Monorail
Engineering Unit
Valid For Construction

DRAWING TITLE:
6TH OF OCTOBER MONORAIL
SHOP DRAWING FOR BRIDGE 6OL11-37
STEEL TRUSS (II).
W47

Project Code	Rubric	Initiator	Lot	Ref	Number	Revision
9 3 M	0 4 0 7	A A C	6 0 L 1 1	D W G	90372	A

-Drawing shall be updated according to the comments on the GA drawing.
-Approval is subjected to the approval of coordination package between multi-discipline.

All holes are 22mm U.N.O Length & Area & Weight per piece						
W48	PL20*547.9	S355J2N	4	776.2	0.89	65.8
Mark	Profile	Grade	QTY	Length	Area	Weight

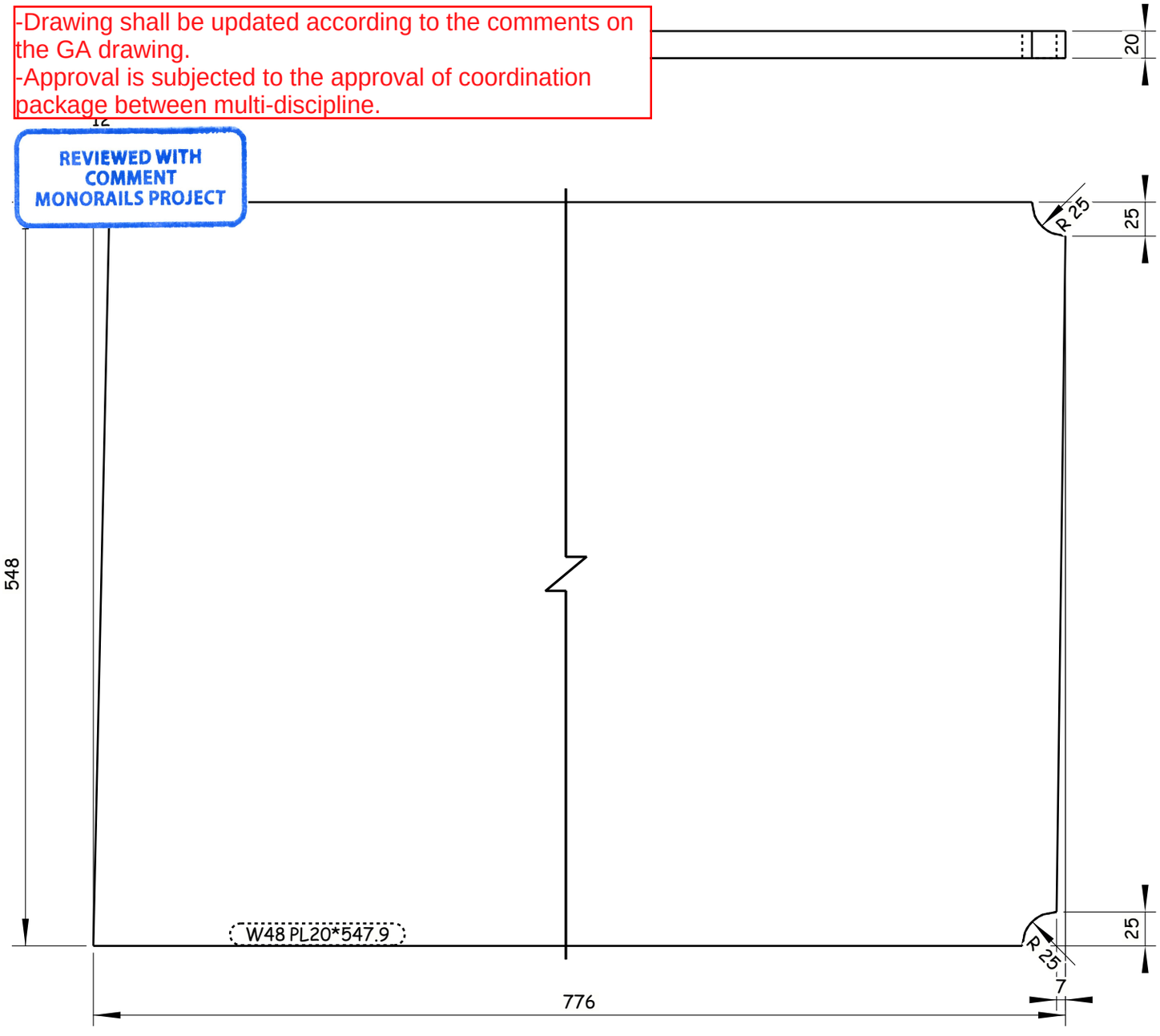

REVIEWED WITH COMMENT MONORAILS PROJECT

4 REQUIRED AS DRAWN E.SH W48

6 October Monorail Engineering Unit
Valid For Construction

Tekla structures

GENERAL NOTES:

1. ALL DIMENSIONS ARE IN MILLIMETERS UNLESS OTHERWISE SPECIFIED.
2. LEVELS ARE IN METERS
3. DESIGN SERVICE LIFE OF 100 YEARS.
4. FLANGES OF TOP AND BOTTOM CHORDS TO BE SUPPLIED WITH IMPROVED THROUGH THICKNESS PROPERTIES Z25 ACCORDING TO EN10164.

REFERENCE DRAWINGS

1	93M-0407-SEN-6OL11-END-10118-B PAGE 01:17
2	
3	
4	
5	
6	
7	
8	
9	
10	
11	

6TH OF OCTOBER CITY RAIL TRANSIT MONORAIL &
NEW CAPITAL CITY RAIL TRANSIT MONORAIL

The Authority — Hill International Authority Consultant | Main Contractor | Designer

CONTRACTOR CONSULTANT: ENGINEERING HOUSE FOR CONSULTANCY

SCALE: AS SHOWN | SHOP DRAWING | DATE: 20.11.2024

DRAWING TITLE:
6TH OF OCTOBER MONORAIL
SHOP DRAWING FOR BRIDGE 6OL11-37
STEEL TRUSS (II).
W48

REV	DATE	BY	DESCRIPTION	CHK	APD
A	20-11-24	E.SH	ISSUE FOR APPROVAL	A.SH	M.M

Project Code	Rubric	Initiator	Lot	Ref	Number	Revision
93M	0407	AAC	60L11	DWG	90373	A

-Drawing shall be updated according to the comments on the GA drawing.
-Approval is subjected to the approval of coordination package between multi-discipline.

REVIEWED WITH COMMENT
MONORAILS PROJECT

All holes are 22mm U.N.O Length & Area & Weight per piece

Mark	Profile	Grade	QTY	Length	Area	Weight
W49	PL15*342.5	S355J2N	2	735.0	0.51	28.4

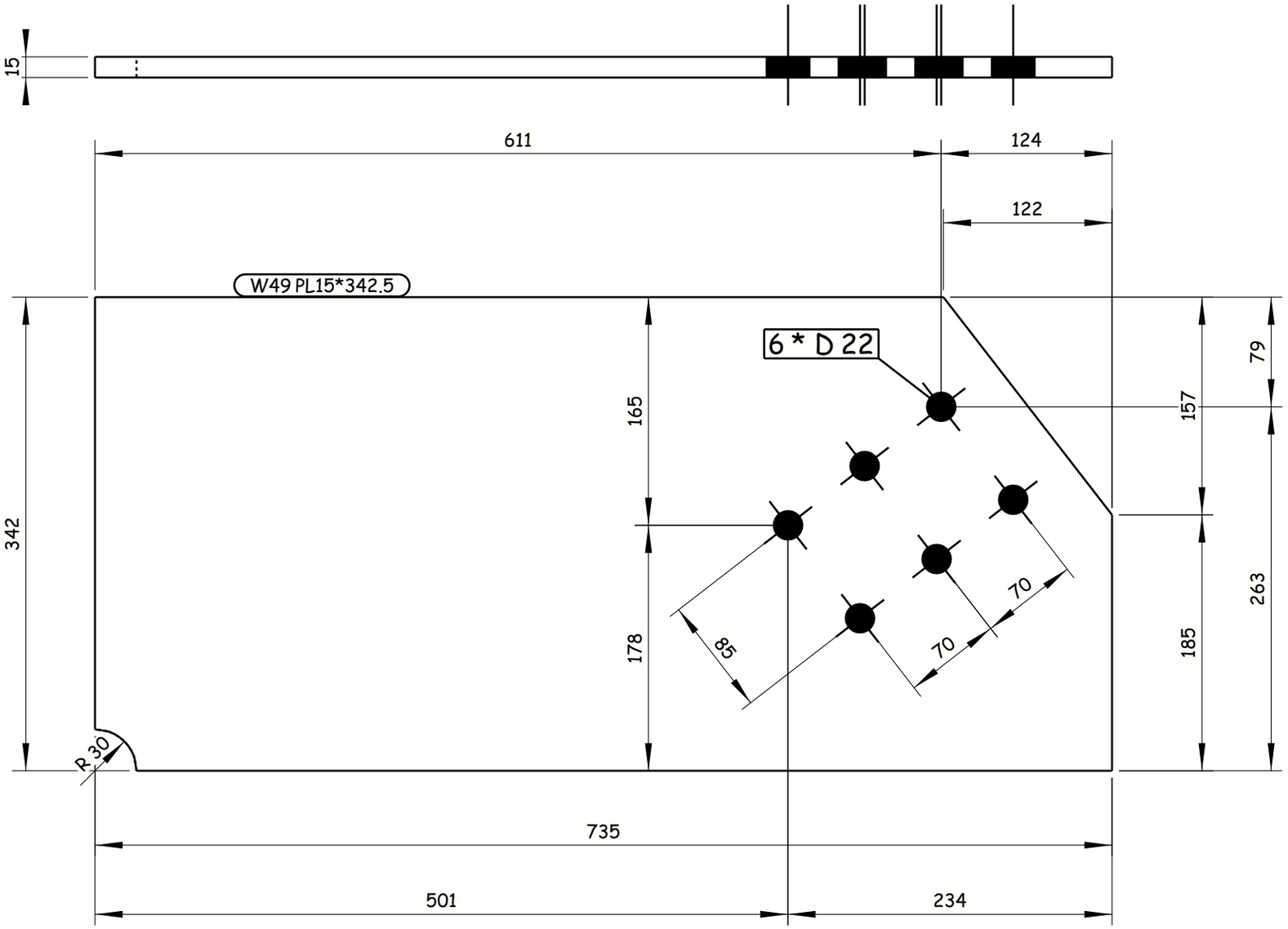

2 REQUIRED AS DRAWN E.SH W49

Tekla structures

GENERAL NOTES:

1. ALL DIMENSIONS ARE IN MILLIMETERS UNLESS OTHERWISE SPECIFIED.
2. LEVELS ARE IN METERS
3. DESIGN SERVICE LIFE OF 100 YEARS.
4. FLANGES OF TOP AND BOTTOM CHORDS TO BE SUPPLIED WITH IMPROVED THROUGH THICKNESS PROPERTIES Z25 ACCORDING TO EN10164.

REFERENCE DRAWINGS

1	93M-0407-SEN-6OL11-END-10118-B PAGE 01:17
2	
3	
4	
5	
6	
7	
8	
9	
10	
11	

6TH OF OCTOBER CITY RAIL TRANSIT MONORAIL &
NEW CAPITAL CITY RAIL TRANSIT MONORAIL

The Authority
Hill International
Authority Consultant

ORASCOM CONSTRUCTION
BOMBARDIER
Main Contractor

SENER
SHAKER CONSULTANCY GROUP
Designer

CONTRACTOR & CONSULTANT:
ENGINEERING HOUSE FOR CONSULTANCY

6 October Monorail
Engineering Unit
Valid For Construction

SCALE	SHOP DRAWING	DATE
AS SHOWN		20.11.2024

DRAWING TITLE:
6TH OF OCTOBER MONORAIL
SHOP DRAWING FOR BRIDGE 6OL11-37
STEEL TRUSS (II).
W49

REV	DATE	BY	DESCRIPTION	CHK	APD
A	20-11-24	E.SH	ISSUE FOR APPROVAL	A.SH	M.M

Project Code	Rubric	Initiator	Lot	Ref	Number	Revision
93M	0407	AAC	60L11	DWG	90374	A

-Drawing shall be updated according to the comments on the GA drawing.
-Approval is subjected to the approval of coordination package between multi-discipline.

REVIEWED WITH COMMENT
MONORAILS PROJECT

All holes are 22mm U.N.O Length & Area & Weight per piece						
W50	PL15*342.5	S355J2N	1	735.0	0.51	28.3
Mark	Profile	Grade	QTY	Length	Area	Weight

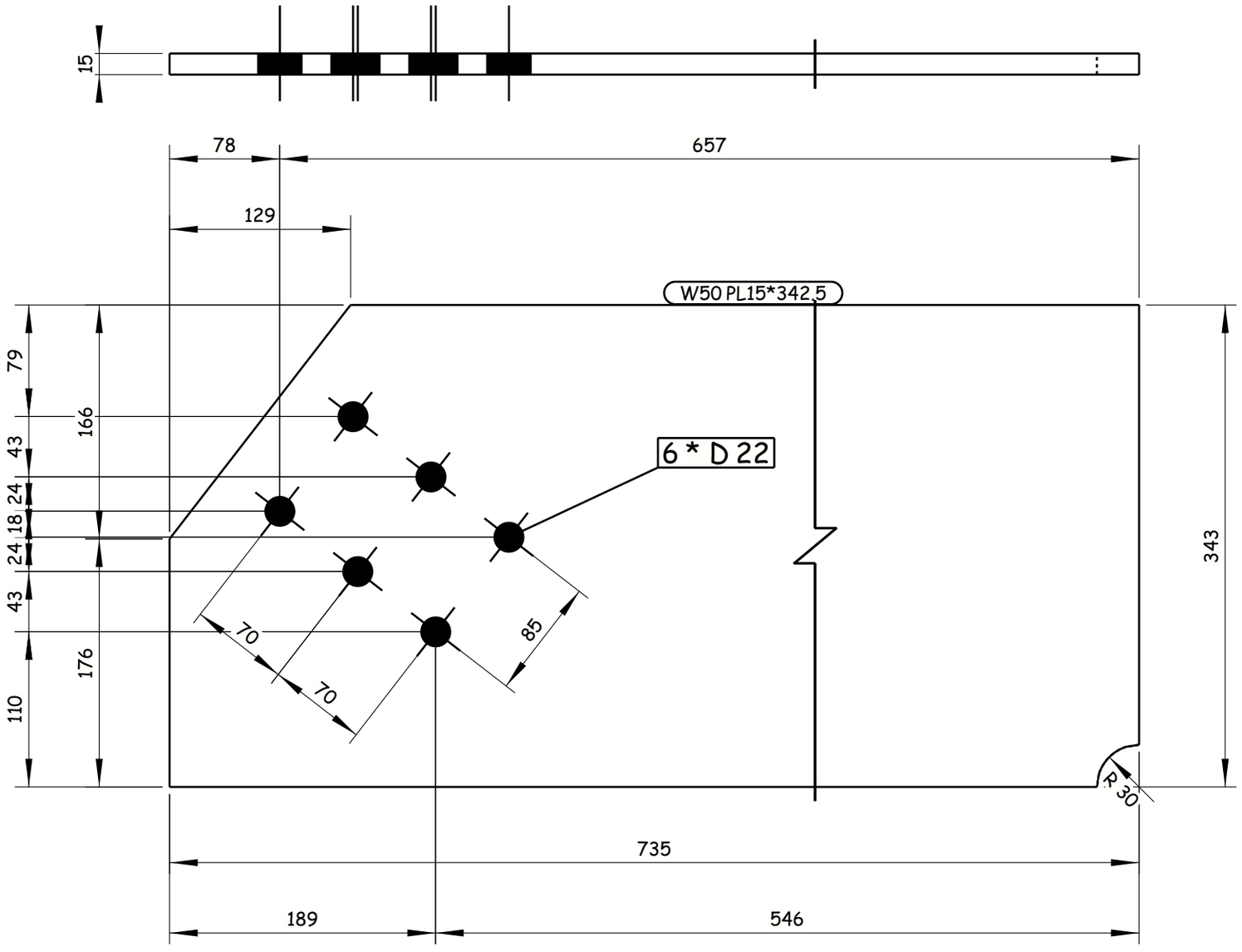

1 REQUIRED AS DRAWN E.SH W50

GENERAL NOTES:

1. ALL DIMENSIONS ARE IN MILLIMETERS UNLESS OTHERWISE SPECIFIED.
2. LEVELS ARE IN METERS
3. DESIGN SERVICE LIFE OF 100 YEARS.
4. FLANGES OF TOP AND BOTTOM CHORDS TO BE SUPPLIED WITH IMPROVED THROUGH THICKNESS PROPERTIES Z25 ACCORDING TO EN10164.

REFERENCE DRAWINGS

1	93M-0407-SEN-6OL11-END-10118-B PAGE 01:17
2	
3	
4	
5	
6	
7	
8	
9	
10	
11	

6TH OF OCTOBER CITY RAIL TRANSIT MONORAIL &
NEW CAPITAL CITY RAIL TRANSIT MONORAIL

The Authority — Hill International Authority Consultant — Main Contractor — Designer

CONTRACTOR/ CONSULTANT:

ENGINEERING HOUSE FOR CONSULTANCY

SCALE: AS SHOWN | SHOP DRAWING | DATE: 20.11.2024

REV	DATE	BY	DESCRIPTION	CHK	APD
A	20-11-24	E.SH	ISSUE FOR APPROVAL	A.SH	M.M

6 October Monorail
Engineering Unit
Valid For Construction

DRAWING TITLE:
6TH OF OCTOBER MONORAIL
SHOP DRAWING FOR BRIDGE 6OL11-37
STEEL TRUSS (II).
W50

Project Code	Rubric	Initiator	Lot	Ref	Number	Revision
93M	0407	AAC	60L11	DWG	90375	A

Tekla structures

-Drawing shall be updated according to the comments on the GA drawing.
-Approval is subjected to the approval of coordination package between multi-discipline.

REVIEWED WITH COMMENT
MONORAILS PROJECT

All holes are 22mm U.N.O Length & Area & Weight per piece

Mark	Profile	Grade	QTY	Length	Area	Weight
W51	PL15*342.5	S355J2N	1	735.0	0.52	28.5

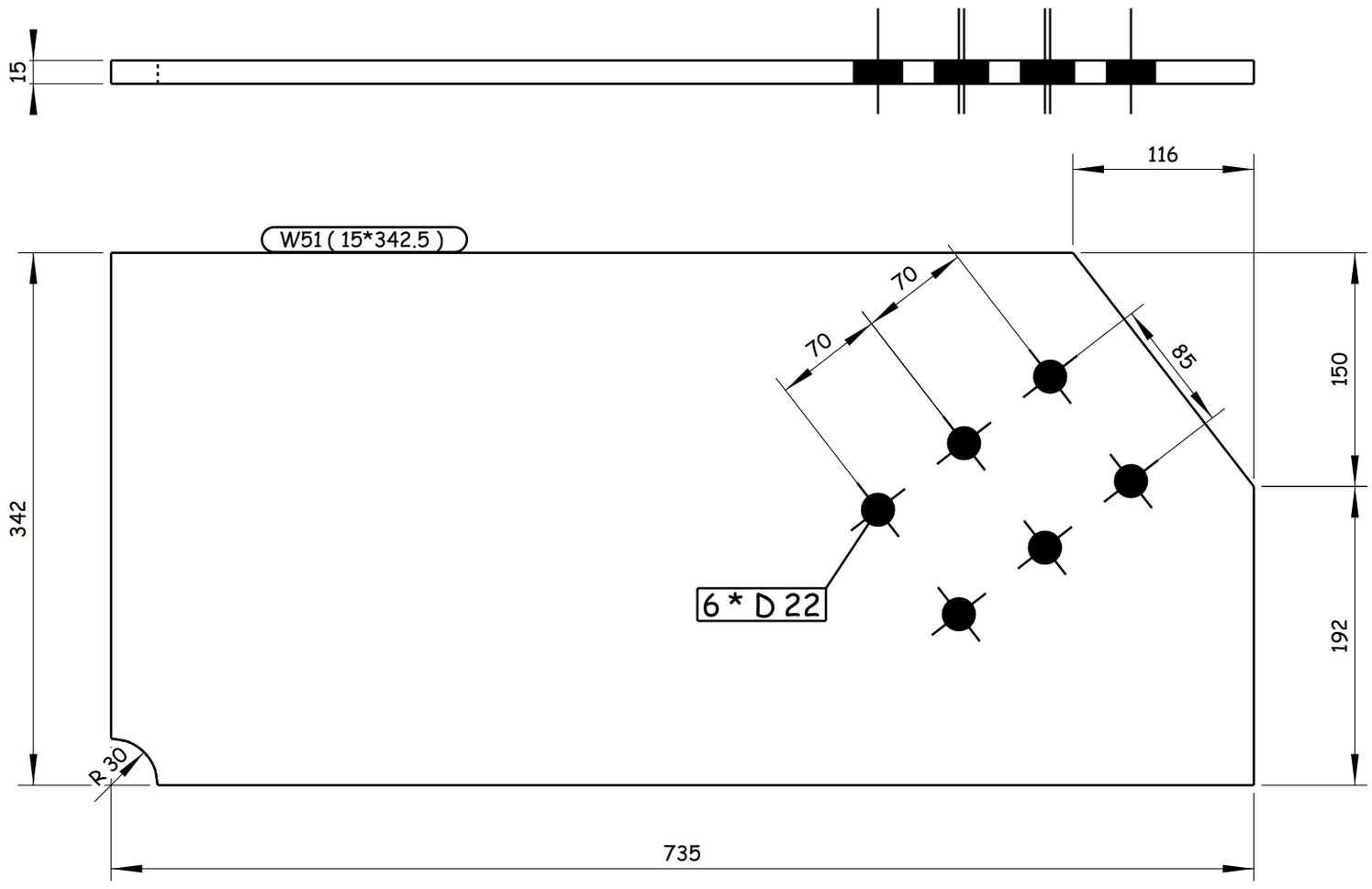

1 REQUIRED AS DRAWN E.SH W51

6 October Monorail
Engineering Unit
Valid For Cönstruction

Tekla structures

GENERAL NOTES:

1. ALL DIMENSIONS ARE IN MILLIMETERS UNLESS OTHERWISE SPECIFIED.
2. LEVELS ARE IN METERS
3. DESIGN SERVICE LIFE OF 100 YEARS.
4. FLANGES OF TOP AND BOTTOM CHORDS TO BE SUPPLIED WITH IMPROVED THROUGH THICKNESS PROPERTIES Z25 ACCORDING TO EN10164.

REFERENCE DRAWINGS

1	93M-0407-SEN-6OL11-END-10118-B PAGE 01:17
2	
3	
4	
5	
6	
7	
8	
9	
10	
11	

6TH OF OCTOBER CITY RAIL TRANSIT MONORAIL &
NEW CAPITAL CITY RAIL TRANSIT MONORAIL

The Authority — Hill International — Authority Consultant
ORASCOM CONSTRUCTION — Main Contractor
BOMBARDIER — SENER — SHAKER CONSULTANCY GROUP — Designer

CONTRACTOR & CONSULTANT:
ENGINEERING HOUSE FOR CONSULTANCY

SCALE: AS SHOWN | SHOP DRAWING | DATE: 20.11.2024

REV.	DATE	BY	DESCRIPTION	CHK	APD.
A	20-11-24	E.SH	ISSUE FOR APPROVAL	A.SH	M.M

DRAWING TITLE:
6TH OF OCTOBER MONORAIL
SHOP DRAWING FOR BRIDGE 6OL11-37
STEEL TRUSS (II).
W51

Project Code	Rubric	Initiator	Lot	Ref	Number	Revision
9 3 M	0 4 0 7	A A C	6 0 L 1 1	D W G	90376	A

-Drawing shall be updated according to the comments on the GA drawing.
-Approval is subjected to the approval of coordination package between multi-discipline.

REVIEWED WITH COMMENT
MONORAILS PROJECT

All holes are 22mm U.N.O Length & Area & Weight per piece

Mark	Profile	Grade	QTY	Length	Area	Weight
W52	PL15*342.5	S355J2N	2	750.0	0.52	29.0

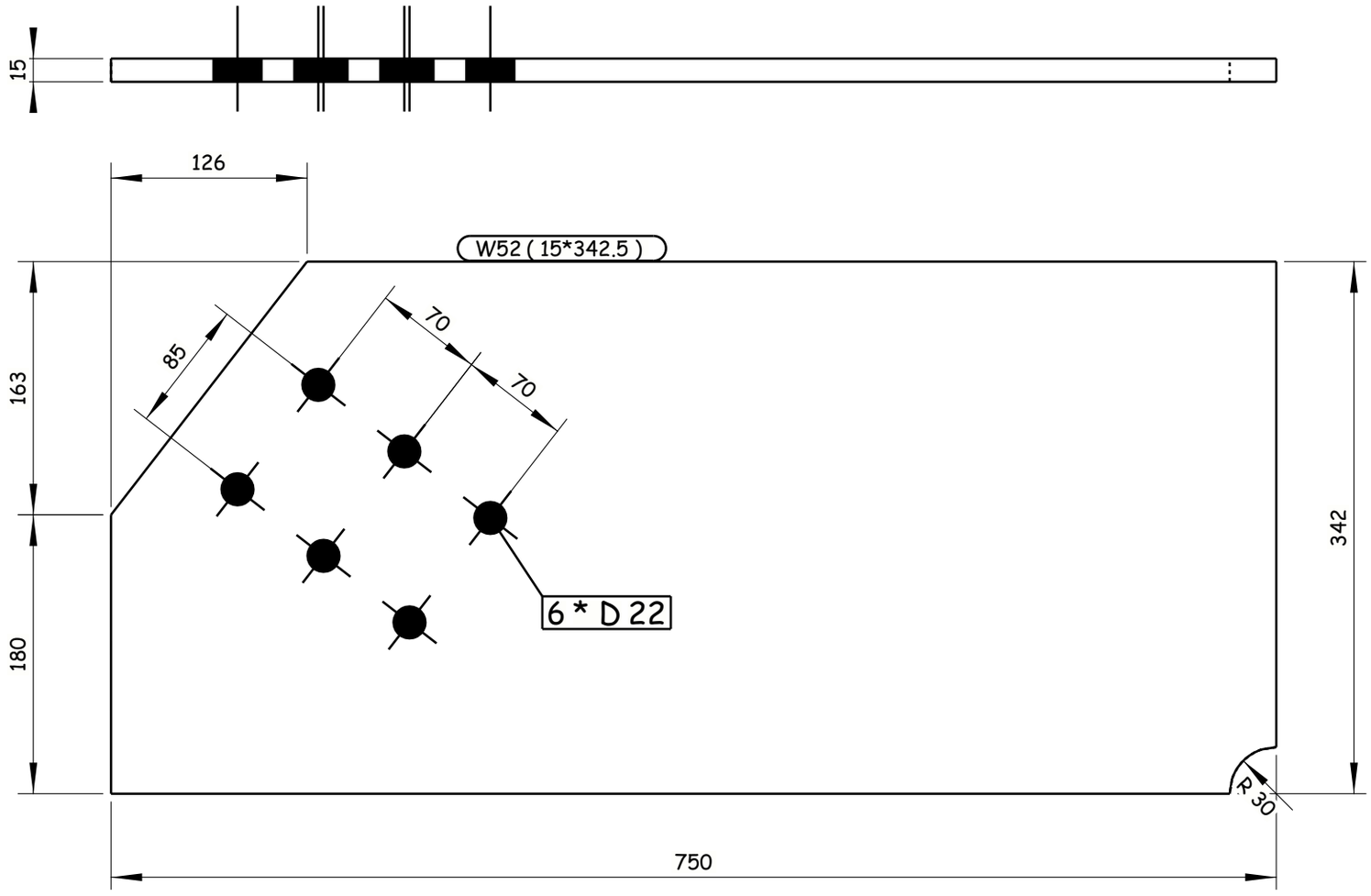

2 REQUIRED AS DRAWN E.SH W52

GENERAL NOTES:

1. ALL DIMENSIONS ARE IN MILLIMETERS UNLESS OTHERWISE SPECIFIED.
2. LEVELS ARE IN METERS
3. DESIGN SERVICE LIFE OF 100 YEARS.
4. FLANGES OF TOP AND BOTTOM CHORDS TO BE SUPPLIED WITH IMPROVED THROUGH THICKNESS PROPERTIES Z25 ACCORDING TO EN10164.

REFERENCE DRAWINGS

1	93M-0407-SEN-6OL11-END-10118-B PAGE 01:17
2	
3	
4	
5	
6	
7	
8	
9	
10	
11	

6TH OF OCTOBER CITY RAIL TRANSIT MONORAIL &
NEW CAPITAL CITY RAIL TRANSIT MONORAIL

The Authority — Hill International Authority Consultant — Main Contractor — Designer

CONTRACTOR & CONSULTANT:

ENGINEERING HOUSE FOR CONSULTANCY

SCALE: AS SHOWN | SHD DRAWING | DATE: 20.11.2024

REV	DATE	BY	DESCRIPTION	CHK	APD
A	20-11-24	E.SH	ISSUE FOR APPROVAL	A.SH	M.M

DRAWING TITLE:
6TH OF OCTOBER MONORAIL
SHOP DRAWING FOR BRIDGE 6OL11-37
STEEL TRUSS (II).
W52

Project Code	Rubric	Initiator	Lot	Ref	Number	Revision
9 3 M	0 4 0 7	A A C	6 0 L 1 1	D W G	90377	A

6 October Monorail
Engineering Unit
Valid For Construction

Tekla structures

-Drawing shall be updated according to the comments on the GA drawing.
-Approval is subjected to the approval of coordination package between multi-discipline.

REVIEWED WITH COMMENT
MONORAILS PROJECT

All holes are 22mm U.N.O Length & Area & Weight per piece						
W53	PL15*342.5	S355J2N	1	735.0	0.51	28.4
Mark	Profile	Grade	QTY	Length	Area	Weight

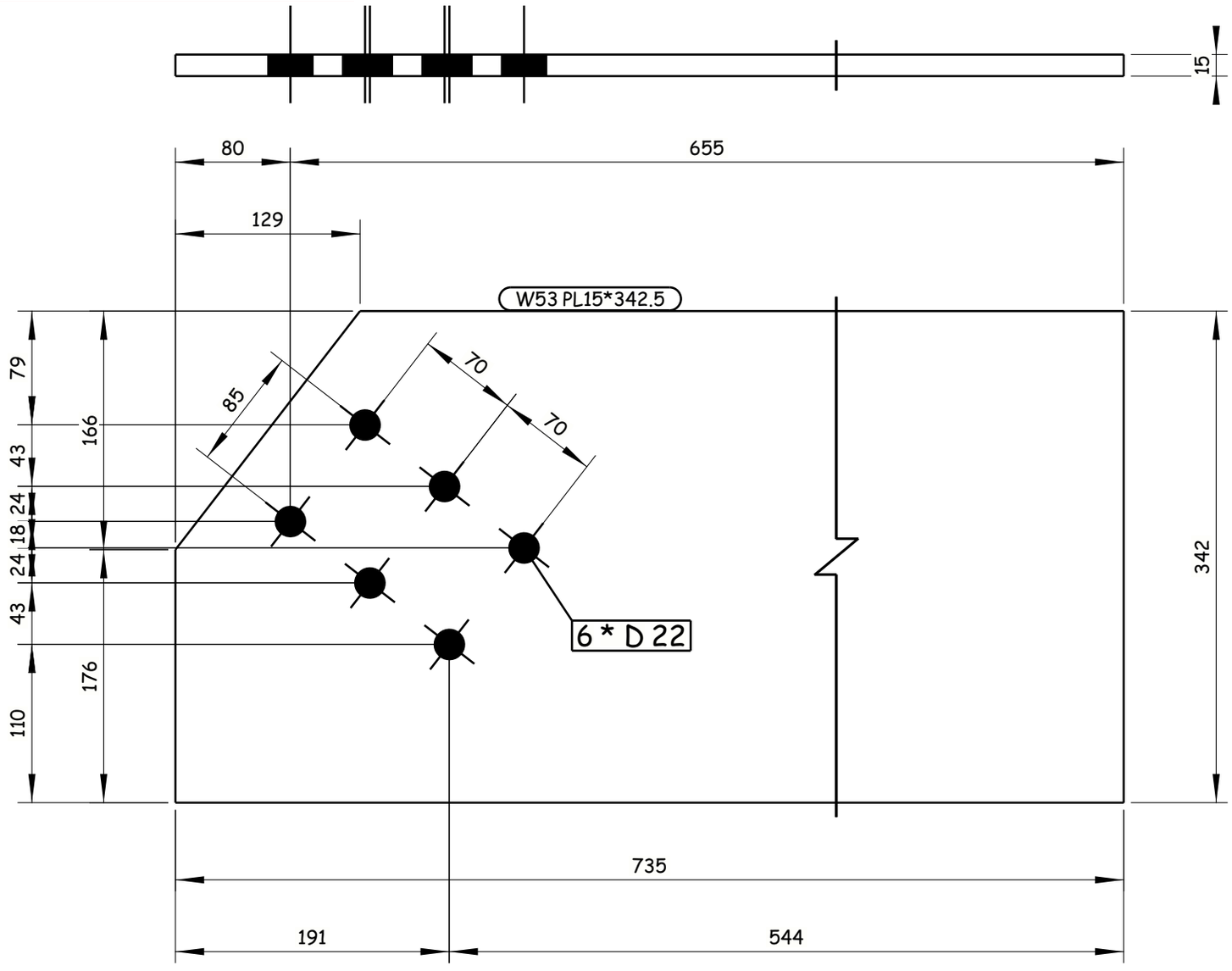

1 REQUIRED AS DRAWN E.SH W53

GENERAL NOTES:

1. ALL DIMENSIONS ARE IN MILLIMETERS UNLESS OTHERWISE SPECIFIED.
2. LEVELS ARE IN METERS
3. DESIGN SERVICE LIFE OF 100 YEARS.
4. FLANGES OF TOP AND BOTTOM CHORDS TO BE SUPPLIED WITH IMPROVED THROUGH THICKNESS PROPERTIES Z25 ACCORDING TO EN10164.

REFERENCE DRAWINGS

1	93M-0407-SEN-6OL11-END-10118-B PAGE 01:17
2	
3	
4	
5	
6	
7	
8	
9	
10	
11	

6TH OF OCTOBER CITY RAIL TRANSIT MONORAIL &
NEW CAPITAL CITY RAIL TRANSIT MONORAIL

The Authority — Authority Consultant
Hill International
Main Contractor: ORASCOM CONSTRUCTION
BOMBARDIER
Designer: SENER, SHAKER CONSULTANCY GROUP

CONTRACTOR/ CONSULTANT:
ENGINEERING HOUSE FOR CONSULTANCY

6 October Monorail
Engineering Unit
Valid For Construction

SCALE	SHOP DRAWING	DATE
AS SHOWN		20.11.2024

REV	DATE	BY	DESCRIPTION	CHK	APD
A	20-11-24	E.SH	ISSUE FOR APPROVAL	A.SH	M.M

DRAWING TITLE:
6TH OF OCTOBER MONORAIL
SHOP DRAWING FOR BRIDGE 6OL11-37
STEEL TRUSS (II).
W53

Project Code	Rubric	Initiator	Lot	Ref	Number	Revision
93M	0407	AAC	6OL11	DWG	90378	A

Tekla structures

-Drawing shall be updated according to the comments on the GA drawing.
-Approval is subjected to the approval of coordination package between multi-discipline.

REVIEWED WITH COMMENT
MONORAILS PROJECT

All holes are 22mm U.N.O Length & Area & Weight per piece

Mark	Profile	Grade	QTY	Length	Area	Weight
W54	PL15*342.5	S355J2N	1	735.0	0.52	28.6

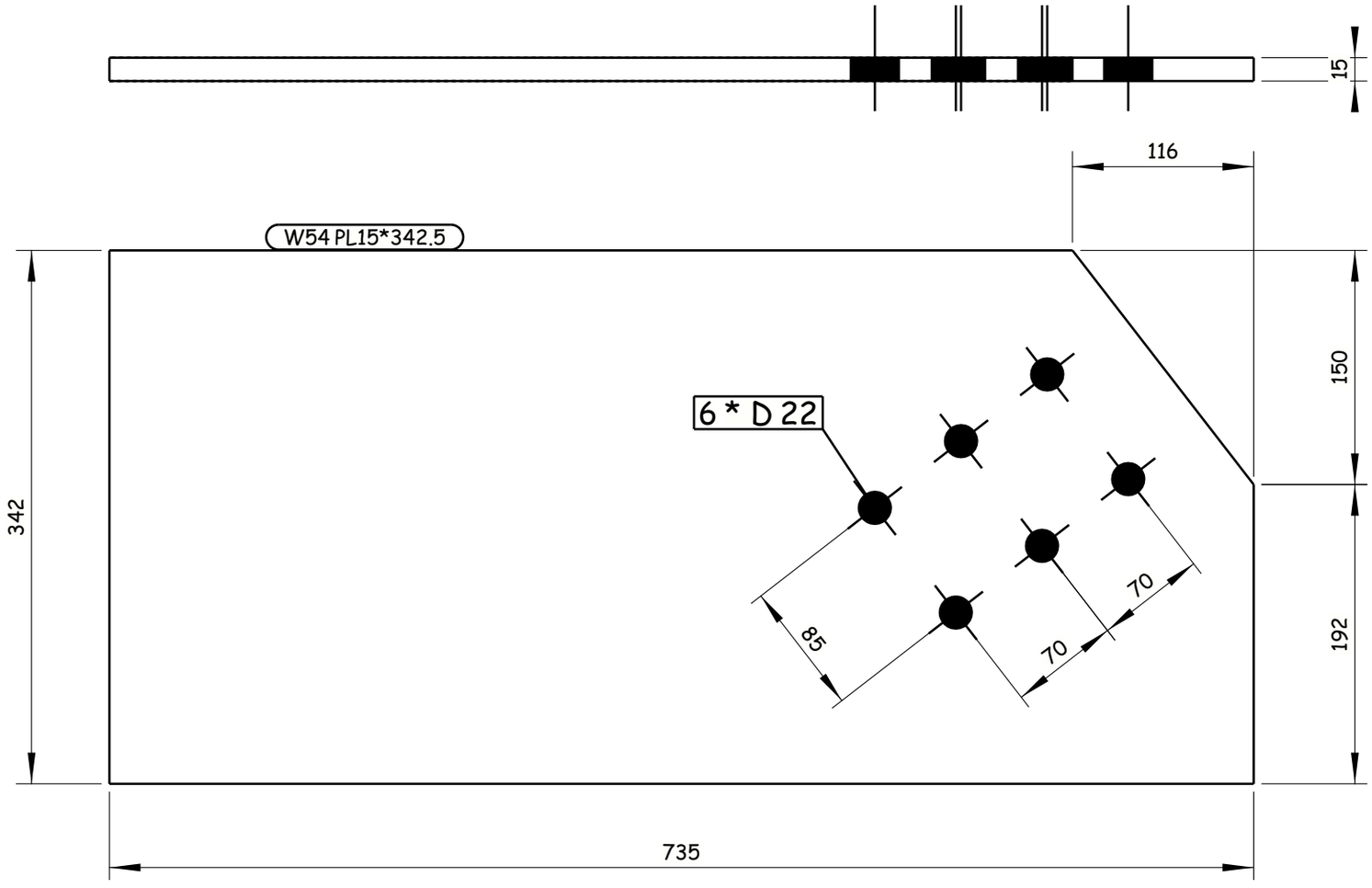

1 REQUIRED AS DRAWN E.SH W54

GENERAL NOTES:

1. ALL DIMENSIONS ARE IN MILLIMETERS UNLESS OTHERWISE SPECIFIED.
2. LEVELS ARE IN METERS
3. DESIGN SERVICE LIFE OF 100 YEARS.
4. FLANGES OF TOP AND BOTTOM CHORDS TO BE SUPPLIED WITH IMPROVED THROUGH THICKNESS PROPERTIES Z25 ACCORDING TO EN10164.

REFERENCE DRAWINGS

1	93M-0407-SEN-6OL11-END-10118-B PAGE 01:17
2	
3	
4	
5	
6	
7	
8	
9	
10	
11	

6TH OF OCTOBER CITY RAIL TRANSIT MONORAIL &
NEW CAPITAL CITY RAIL TRANSIT MONORAIL

The Authority
Hill International
Authority Consultant

Main Contractor

Designer

CONTRACTOR & CONSULTANT:
ENGINEERING HOUSE FOR CONSULTANCY

SCALE: AS SHOWN | CHK'D DRAWING | DATE: 20.11.2024

REV	DATE	BY	DESCRIPTION	CHK	APD
A	20-11-24	E.SH	ISSUE FOR APPROVAL	A.SH	M.M

6 October Monorail
Engineering Unit
Valid For Construction

DRAWING TITLE:
6TH OF OCTOBER MONORAIL
SHOP DRAWING FOR BRIDGE 6OL11-37
STEEL TRUSS (II).
W54

Project Code	Rubric	Initiator	Lot	Ref	Number	Revision
93M	0407	AAC	60L11	DWG	90379	A

Tekla structures

-Drawing shall be updated according to the comments on the GA drawing.
-Approval is subjected to the approval of coordination package between multi-discipline.

REVIEWED WITH COMMENT
MONORAILS PROJECT

All holes are 22mm U.N.O Length & Area & Weight per piece

Mark	Profile	Grade	QTY	Length	Area	Weight
W55	PL15*342.5	S355J2N	2	735.0	0.51	28.4

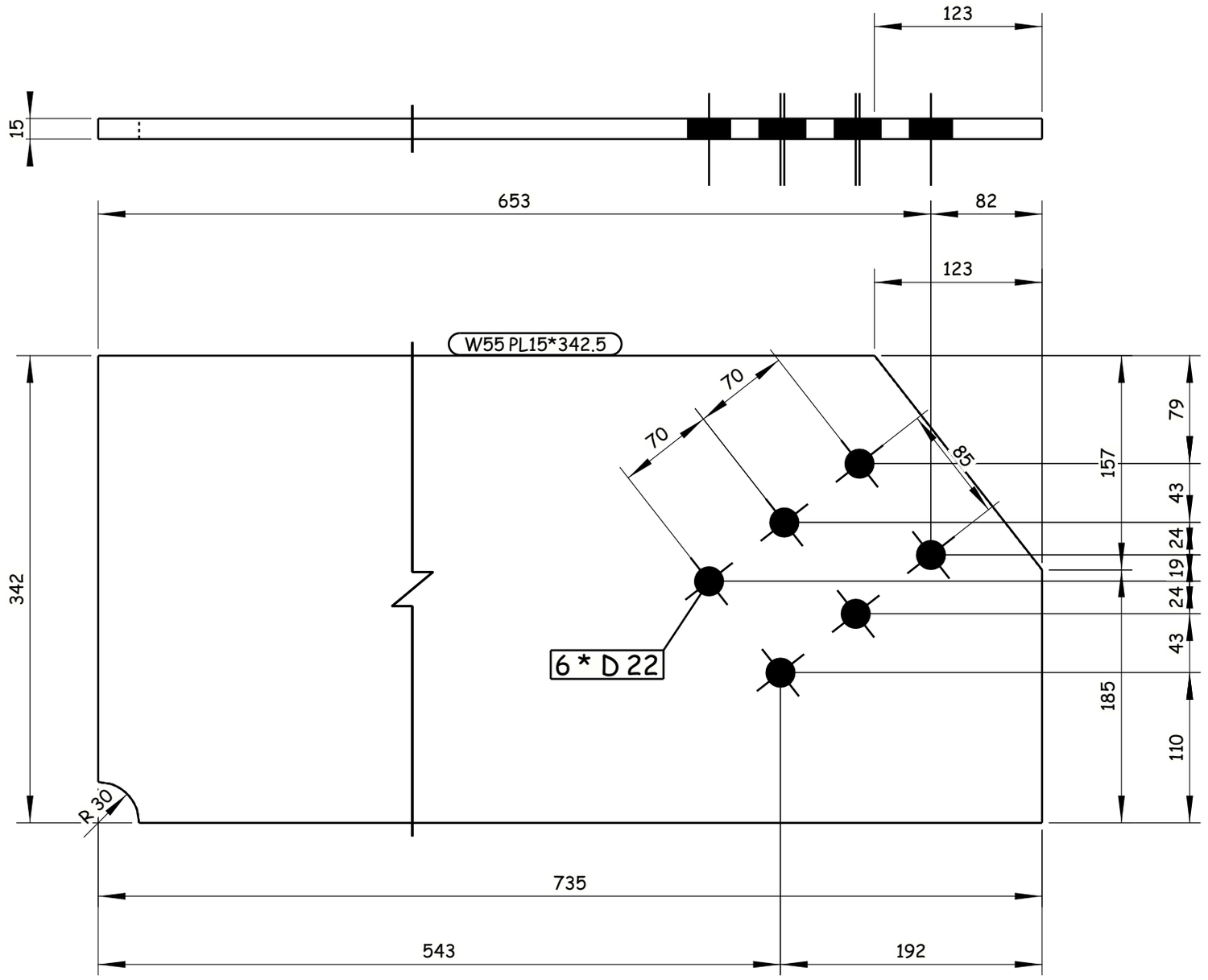

2 REQUIRED AS DRAWN E.SH W55

GENERAL NOTES:

1. ALL DIMENSIONS ARE IN MILLIMETERS UNLESS OTHERWISE SPECIFIED.
2. LEVELS ARE IN METERS
3. DESIGN SERVICE LIFE OF 100 YEARS.
4. FLANGES OF TOP AND BOTTOM CHORDS TO BE SUPPLIED WITH IMPROVED THROUGH THICKNESS PROPERTIES Z25 ACCORDING TO EN10164.

REFERENCE DRAWINGS

1	93M-0407-SEN-6OL11-END-10118-B PAGE 01:17
2	
3	
4	
5	
6	
7	
8	
9	
10	
11	

6TH OF OCTOBER CITY RAIL TRANSIT MONORAIL &
NEW CAPITAL CITY RAIL TRANSIT MONORAIL

The Authority — Hill International — Authority Consultant
ORASCOM CONSTRUCTION — Main Contractor
BOMBARDIER
SENER — SHAKER CONSULTANCY GROUP — Designer

CONTRACTOR & CONSULTANT:
EHC ENGINEERING HOUSE FOR CONSULTANCY

6 October Monorail
Engineering Unit
Valid For Construction

SCALE: AS SHOWN | SHOP DRAWING | DATE: 20.11.2024

DRAWING TITLE:
6TH OF OCTOBER MONORAIL
SHOP DRAWING FOR BRIDGE 6OL11-37
STEEL TRUSS (II).
W55

REV	DATE	BY	DESCRIPTION	CHK	APD
A	20-11-24	E.SH	ISSUE FOR APPROVAL	A.SH	M.M

Project Code	Rubric	Initiator	Lot	Ref	Number	Revision
93M	0407	AAC	60L11	DWG	90380	A

Tekla structures

-Drawing shall be updated according to the comments on the GA drawing.
-Approval is subjected to the approval of coordination package between multi-discipline.

REVIEWED WITH COMMENT
MONORAILS PROJECT

All holes are 22mm U.N.O Length & Area & Weight per piece

Mark	Profile	Grade	QTY	Length	Area	Weight
W56	PL15*342.5	S355J2N	2	735.0	0.51	28.4

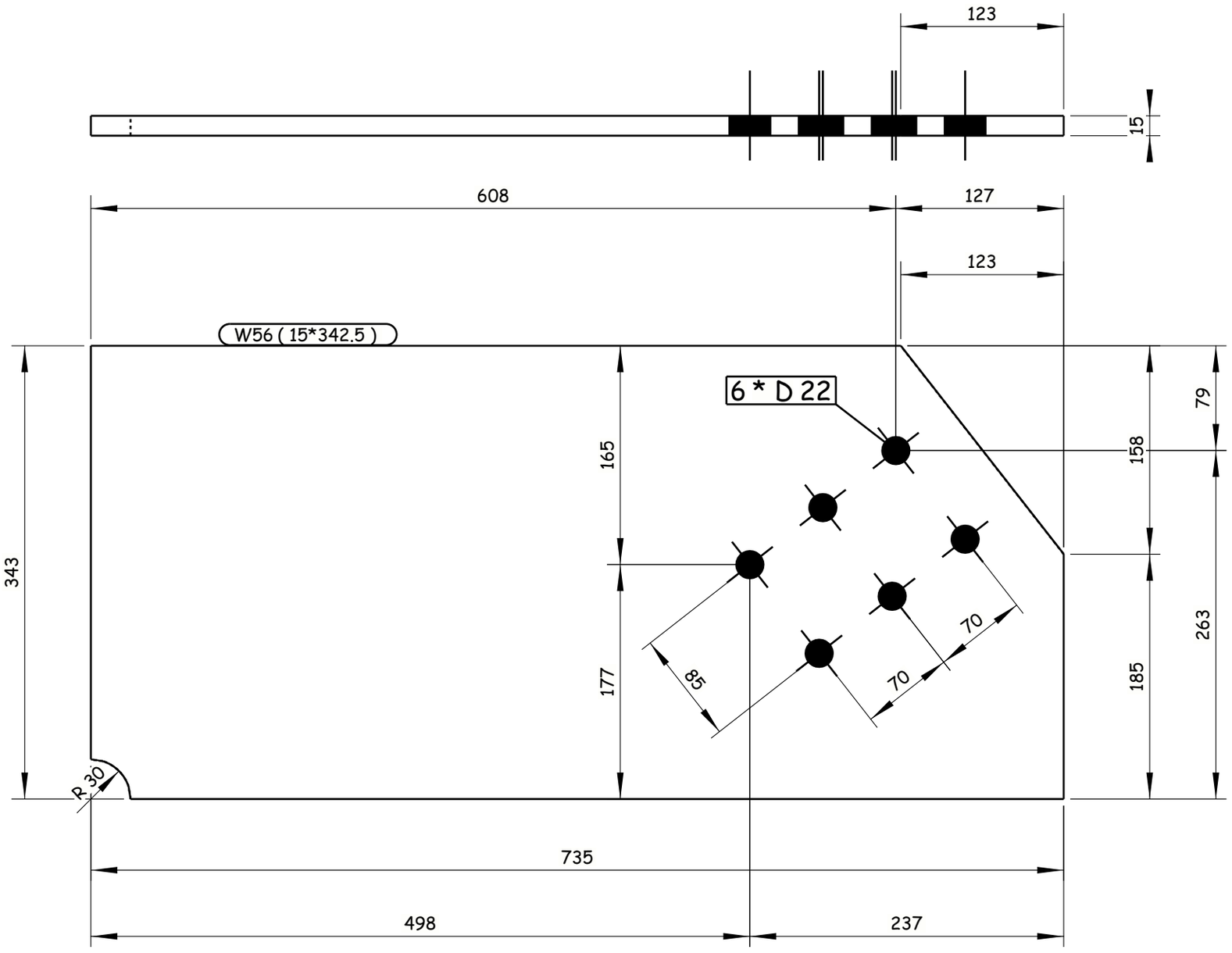

2 REQUIRED AS DRAWN E.SH W56

GENERAL NOTES:

1. ALL DIMENSIONS ARE IN MILLIMETERS UNLESS OTHERWISE SPECIFIED.
2. LEVELS ARE IN METERS
3. DESIGN SERVICE LIFE OF 100 YEARS.
4. FLANGES OF TOP AND BOTTOM CHORDS TO BE SUPPLIED WITH IMPROVED THROUGH THICKNESS PROPERTIES Z25 ACCORDING TO EN10164.

REFERENCE DRAWINGS

1	93M-0407-SEN-6OL11-END-10118-B PAGE 01:17
2	
3	
4	
5	
6	
7	
8	
9	
10	
11	

6TH OF OCTOBER CITY RAIL TRANSIT MONORAIL &
NEW CAPITAL CITY RAIL TRANSIT MONORAIL

The Authority | Hill International Authority Consultant | ORASCOM CONSTRUCTION | BOMBARDIER Main Contractor | SENER SHAKER CONSULTANCY GROUP Designer

CONTRACTOR / CONSULTANT : ENGINEERING HOUSE FOR CONSULTANCY

SCALE: AS SHOWN | CHD DRAWING | DATE: 20.11.2024

REV	DATE	BY	DESCRIPTION	CHK	APD
A	20-11-24	E.SH	ISSUE FOR APPROVAL	A.SH	M.M

6 October Monorail
Engineering Unit
Valid For Construction

DRAWING TITLE:
6TH OF OCTOBER MONORAIL
SHOP DRAWING FOR BRIDGE 6OL11-37
STEEL TRUSS (II).
W56

Project Code	Rubric	Initiator	Lot	Ref	Number	Revision
9 3 M 0 4 0 7	A A C	6 0 L 1 1	D W G		90381	A

Tekla structures

-Drawing shall be updated according to the comments on the GA drawing.
-Approval is subjected to the approval of coordination package between multi-discipline.

REVIEWED WITH COMMENT
MONORAILS PROJECT

All holes are 22mm U.N.O Length & Area & Weight per piece

Mark	Profile	Grade	QTY	Length	Area	Weight
W57	FLT25*400	S355J2N	4	1573.0	1.16	104.9

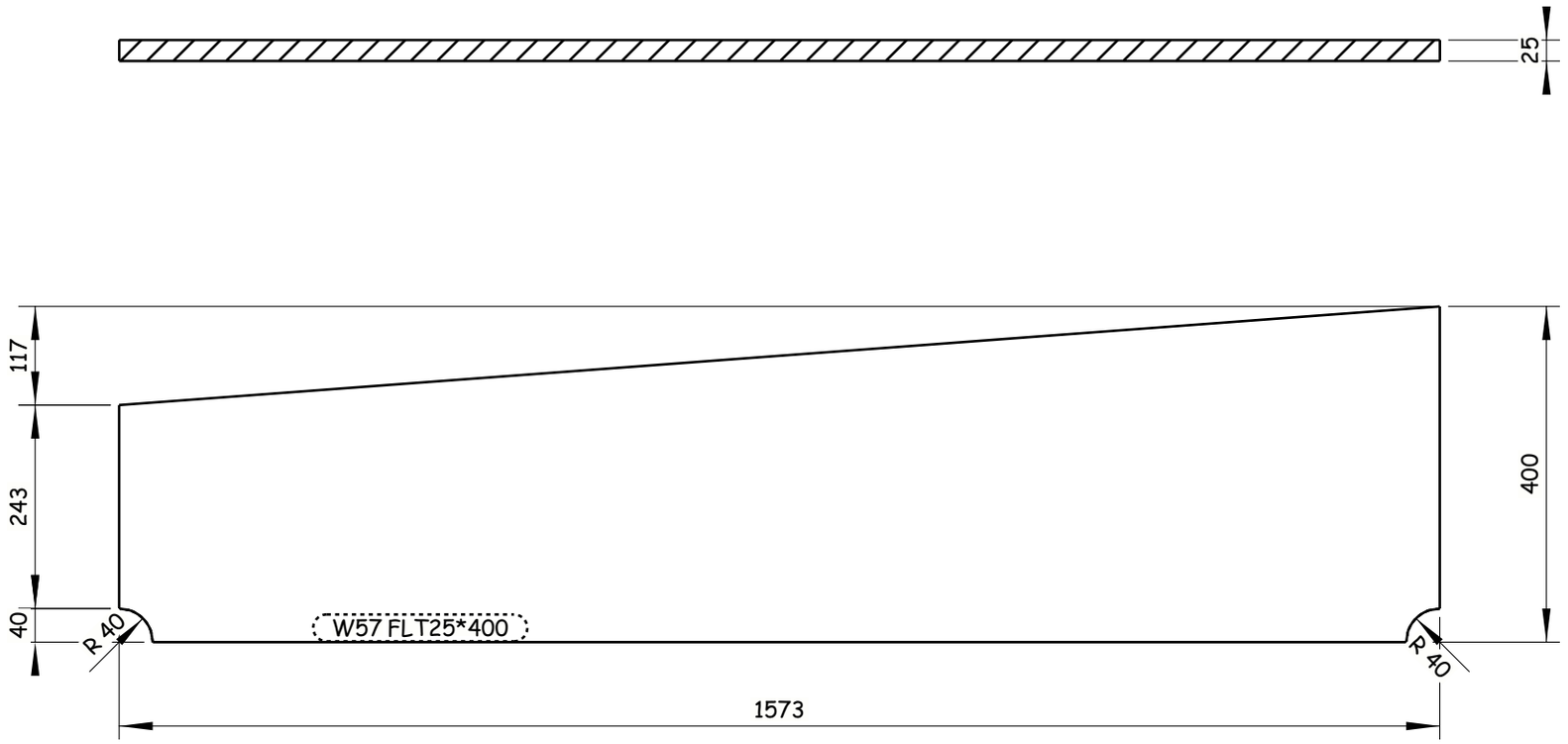

4 REQUIRED AS DRAWN E.SH W57

Tekla structures

GENERAL NOTES:

1. ALL DIMENSIONS ARE IN MILLIMETERS UNLESS OTHERWISE SPECIFIED.
2. LEVELS ARE IN METERS
3. DESIGN SERVICE LIFE OF 100 YEARS.
4. FLANGES OF TOP AND BOTTOM CHORDS TO BE SUPPLIED WITH IMPROVED THROUGH THICKNESS PROPERTIES Z25 ACCORDING TO EN10164.

REFERENCE DRAWINGS

1	93M-0407-SEN-6OL11-END-10118-B PAGE 01:17
2	
3	
4	
5	
6	
7	
8	
9	
10	
11	

6TH OF OCTOBER CITY RAIL TRANSIT MONORAIL &
NEW CAPITAL CITY RAIL TRANSIT MONORAIL

The Authority
Hill International
Authority Consultant

ORASCOM CONSTRUCTION
BOMBARDIER
Main Contractor

SENER
SHAKER CONSULTANCY GROUP
Designer

CONTRACTOR
CONSULTANT :
ENGINEERING HOUSE FOR CONSULTANCY

6 October Monorail
Engineering Unit
Valid For Construction

SCALE	SHOP DRAWING	DATE
AS SHOWN		20.11.2024

DRAWING TITLE:
6TH OF OCTOBER MONORAIL
SHOP DRAWING FOR BRIDGE 6OL11-37
STEEL TRUSS (II).
W57

REV	DATE	BY	DESCRIPTION	CHK	APD
A	20-11-24	E.SH	ISSUE FOR APPROVAL	A.SH	M.M

Project Code	Rubric	Initiator	Lot	Ref	Number	Revision
93M	407	ACE	60LL11	DWG	90382	A

-Drawing shall be updated according to the comments on the GA drawing.
-Approval is subjected to the approval of coordination package between multi-discipline.

REVIEWED WITH COMMENT
MONORAILS PROJECT

All holes are 22mm U.N.O Length & Area & Weight per piece

Mark	Profile	Grade	QTY	Length	Area	Weight
WEB1	PL12*360	S355J2N	2	4760.0	3.51	159.5

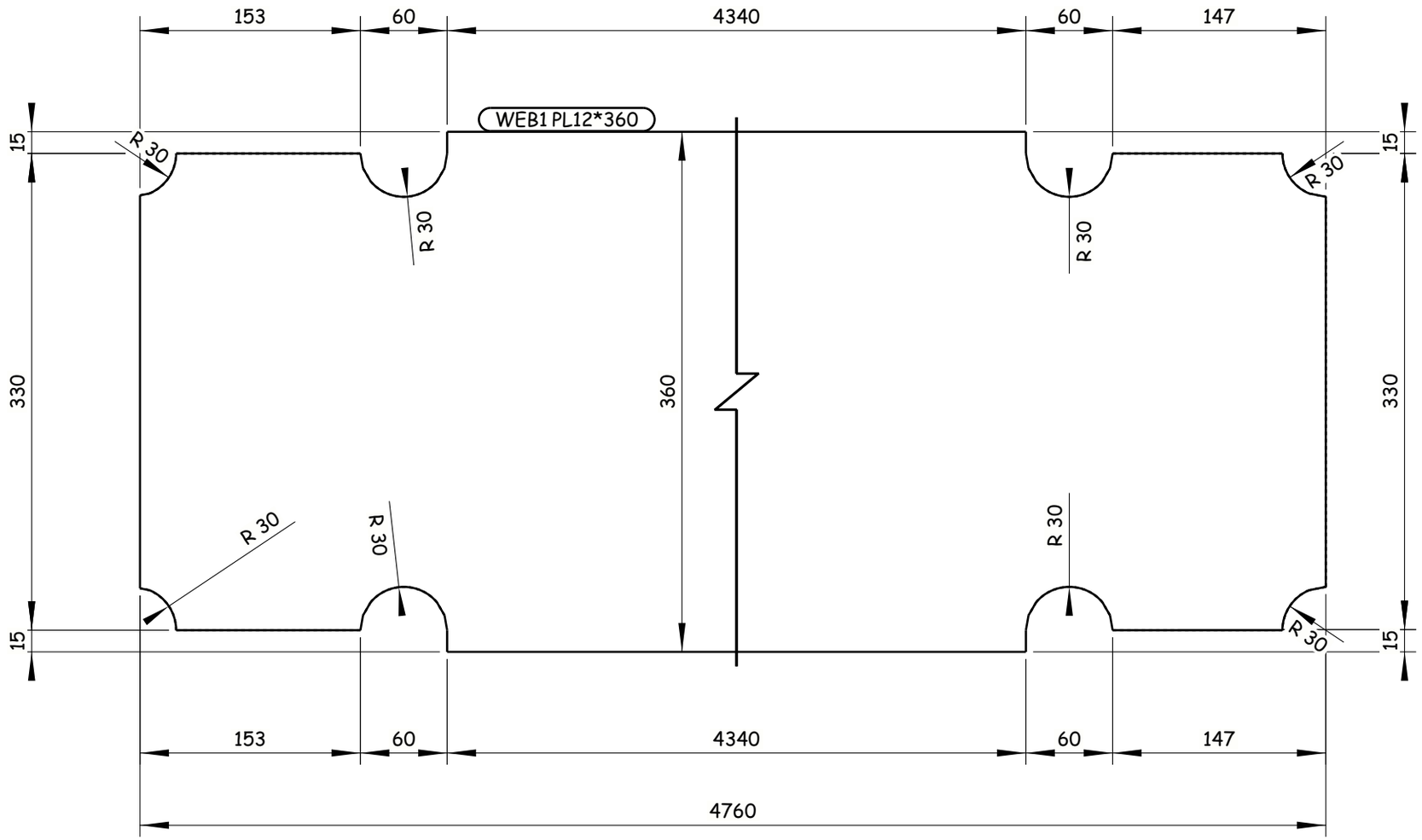

2 REQUIRED AS DRAWN E.SH WEB1

GENERAL NOTES:
1. ALL DIMENSIONS ARE IN MILLIMETERS UNLESS OTHERWISE SPECIFIED.
2. LEVELS ARE IN METERS
3. DESIGN SERVICE LIFE OF 100 YEARS.
4. FLANGES OF TOP AND BOTTOM CHORDS TO BE SUPPLIED WITH IMPROVED THROUGH THICKNESS PROPERTIES Z25 ACCORDING TO EN10164.

REFERENCE DRAWINGS

1	93M-0407-SEN-6OL11-END-10118-B PAGE 01:17
2	
3	
4	
5	
6	
7	
8	
9	
10	
11	

6TH OF OCTOBER CITY RAIL TRANSIT MONORAIL &
NEW CAPITAL CITY RAIL TRANSIT MONORAIL

The Authority
Hill International
Authority Consultant
Main Contractor
Designer

CONTRACTOR & CONSULTANT: ENGINEERING HOUSE FOR CONSULTANCY

SCALE AS SHOWN | CHK'D DRAWING | DATE 20.11.2024

REV	DATE	BY	DESCRIPTION	CHK	APD
A	20-11-24	E.SH	ISSUE FOR APPROVAL	A.SH	M.M

6 October Monorail
Engineering Unit
Valid For Construction

DRAWING TITLE:
6TH OF OCTOBER MONORAIL
SHOP DRAWING FOR BRIDGE 6OL11-37
STEEL TRUSS (II).
WEB1

Project Code	Rubric	Initiator	Lot	Ref	Number	Revision
93M	0407	AAC	60L11	DWG	90383	A

Tekla structures

-Drawing shall be updated according to the comments on the GA drawing.
-Approval is subjected to the approval of coordination package between multi-discipline.

REVIEWED WITH COMMENT
MONORAILS PROJECT

All holes are 22mm U.N.O Length & Area & Weight per piece

Mark	Profile	Grade	QTY	Length	Area	Weight
WP1	PL15*540	S355J2N	4	4096.6	4.55	260.0

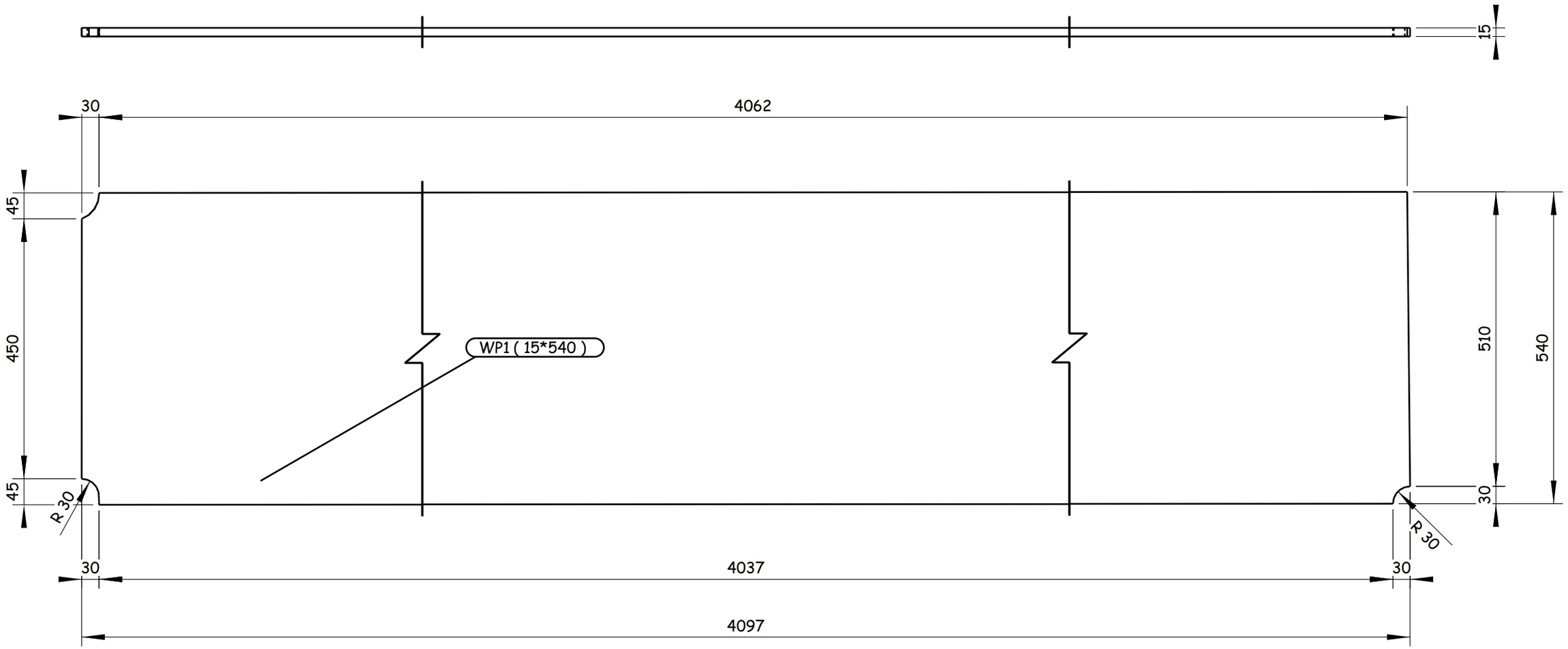

4 REQUIRED AS DRAWN E.SH WP1

GENERAL NOTES:

1. ALL DIMENSIONS ARE IN MILLIMETERS UNLESS OTHERWISE SPECIFIED.
2. LEVELS ARE IN METERS
3. DESIGN SERVICE LIFE OF 100 YEARS.
4. FLANGES OF TOP AND BOTTOM CHORDS TO BE SUPPLIED WITH IMPROVED THROUGH THICKNESS PROPERTIES Z25 ACCORDING TO EN10164.

REFERENCE DRAWINGS

1	93M-0407-SEN-6OL11-END-10118-B PAGE 01:17
2	
3	
4	
5	
6	
7	
8	
9	
10	
11	

6TH OF OCTOBER CITY RAIL TRANSIT MONORAIL &
NEW CAPITAL CITY RAIL TRANSIT MONORAIL

The Authority — Hill International — Authority Consultant
ORASCOM CONSTRUCTION — BOMBARDIER — Main Contractor
SENER — SHAKER CONSULTANCY GROUP — Designer

CONTRACTOR & CONSULTANT:
ENGINEERING HOUSE FOR CONSULTANCY

6 October Monorail
Engineering Unit
Valid For Construction

SCALE AS SHOWN | SHD DRAWING | DATE 20.11.2024

REV	DATE	BY	DESCRIPTION	CHK	APD
A	20-11-24	E.SH	ISSUE FOR APPROVAL	A.SH	M.M

DRAWING TITLE:
6TH OF OCTOBER MONORAIL
SHOP DRAWING FOR BRIDGE 6OL11-37
STEEL TRUSS (II).
WP1

Project Code	Rubric	Initiator	Lot	Ref	Number	Revision
93M	04	07	AAC60	L11	DWG	90384	A

Tekla structures

-Drawing shall be updated according to the comments on the GA drawing.
-Approval is subjected to the approval of coordination package between multi-discipline.

REVIEWED WITH COMMENT
MONORAILS PROJECT

All holes are 22mm U.N.O Length & Area & Weight per piece

Mark	Profile	Grade	QTY	Length	Area	Weight
WP2	PL20*550	S355J2N	4	3319.2	3.80	286.0

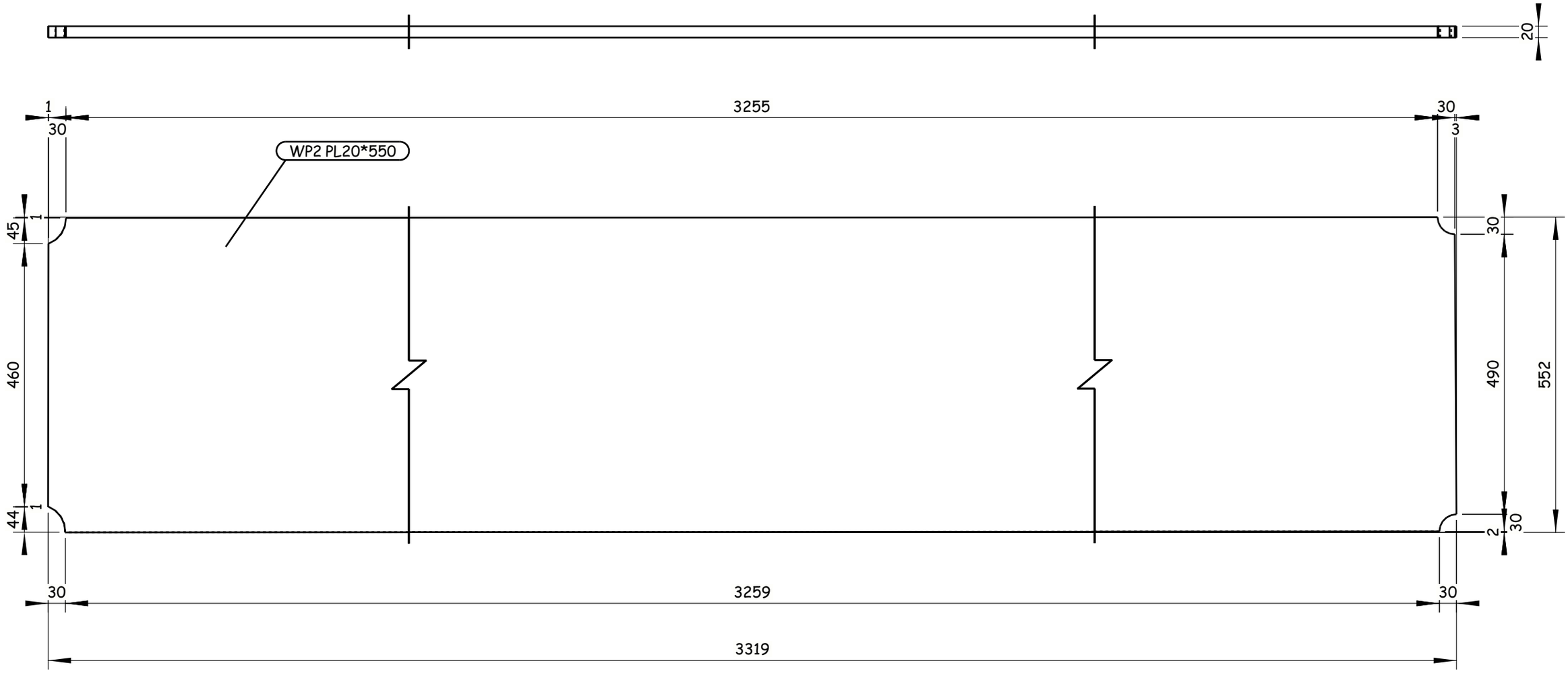

4 REQUIRED AS DRAWN E.SH WP2

GENERAL NOTES:

1. ALL DIMENSIONS ARE IN MILLIMETERS UNLESS OTHERWISE SPECIFIED.
2. LEVELS ARE IN METERS
3. DESIGN SERVICE LIFE OF 100 YEARS.
4. FLANGES OF TOP AND BOTTOM CHORDS TO BE SUPPLIED WITH IMPROVED THROUGH THICKNESS PROPERTIES Z25 ACCORDING TO EN10164.

REFERENCE DRAWINGS

1	93M-0407-SEN-6OL11-END-10118-B PAGE 01:17
2	
3	
4	
5	
6	
7	
8	
9	
10	
11	

6TH OF OCTOBER CITY RAIL TRANSIT MONORAIL &
NEW CAPITAL CITY RAIL TRANSIT MONORAIL

The Authority — Hill International — Authority Consultant
Main Contractor
Designer

CONTRACTOR & CONSULTANT:
ENGINEERING HOUSE FOR CONSULTANCY

SCALE: AS SHOWN | SHOP DRAWING | DATE: 20.11.2024

REV	DATE	BY	DESCRIPTION	CHK	APD
A	20-11-24	E.SH	ISSUE FOR APPROVAL	A.SH	M.M

6 October Monorail
Engineering Unit
Valid For Construction

DRAWING TITLE:
6TH OF OCTOBER MONORAIL
SHOP DRAWING FOR BRIDGE 6OL11-37
STEEL TRUSS (II).
WP2

Project Code	Rubric	Initiator	Lot	Ref	Number	Revision
93M	0407	AAC	60L11	DWG	90385	A

Tekla structures

-Drawing shall be updated according to the comments on the GA drawing.
-Approval is subjected to the approval of coordination package between multi-discipline.

REVIEWED WITH COMMENT
MONORAILS PROJECT

All holes are 22mm U.N.O Length & Area & Weight per piece

Mark	Profile	Grade	QTY	Length	Area	Weight
WP3	PL20*520	S355J2N	4	752.3	0.83	61.2

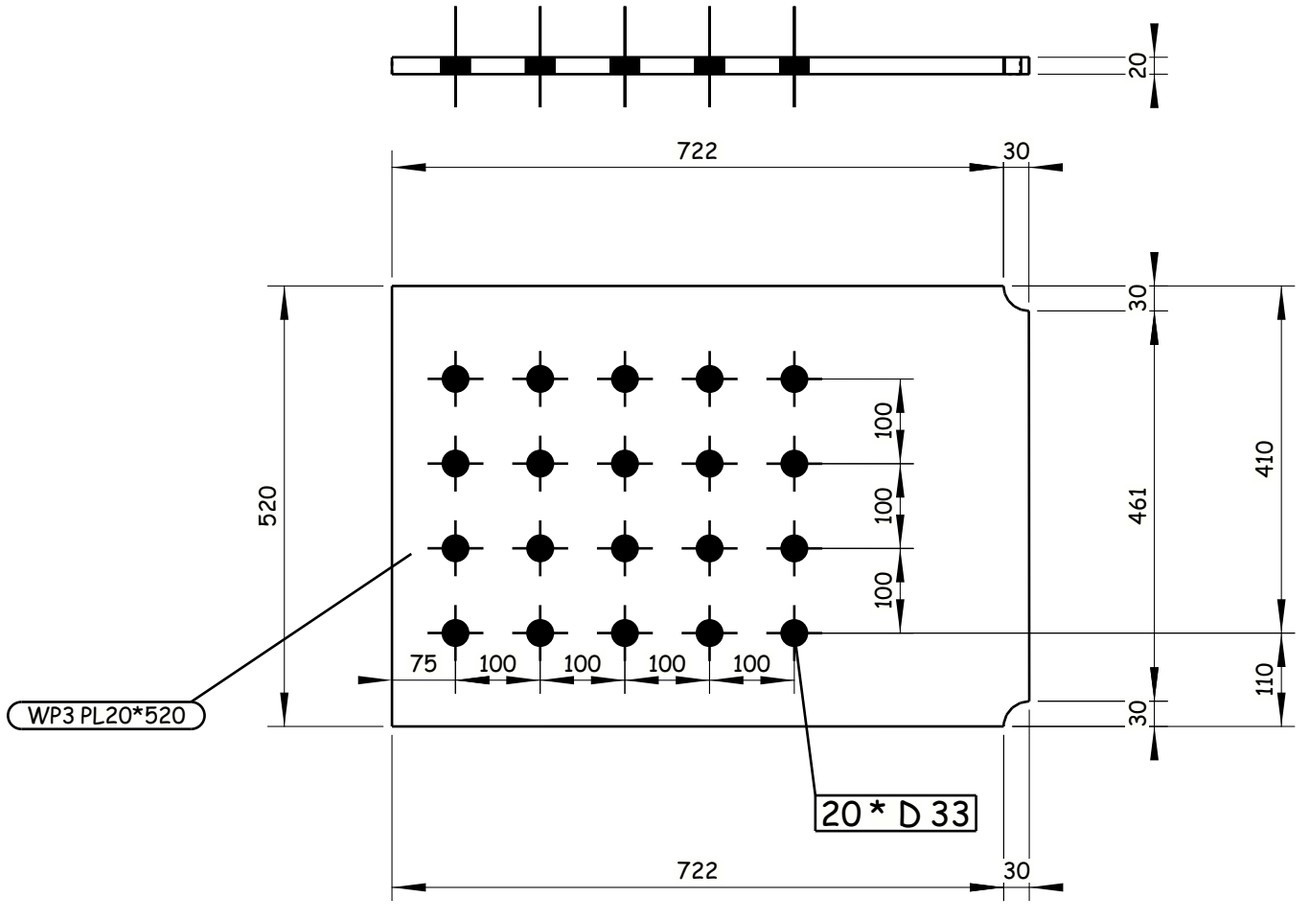

4 REQUIRED AS DRAWN E.SH WP3

Tekla structures

GENERAL NOTES:
1. ALL DIMENSIONS ARE IN MILLIMETERS UNLESS OTHERWISE SPECIFIED.
2. LEVELS ARE IN METERS
3. DESIGN SERVICE LIFE OF 100 YEARS.
4. FLANGES OF TOP AND BOTTOM CHORDS TO BE SUPPLIED WITH IMPROVED THROUGH THICKNESS PROPERTIES Z25 ACCORDING TO EN10164.

REFERENCE DRAWINGS

1	93M-0407-SEN-6OL11-END-10118-B PAGE 01:17
2	
3	
4	
5	
6	
7	
8	
9	
10	
11	

6TH OF OCTOBER CITY RAIL TRANSIT MONORAIL &
NEW CAPITAL CITY RAIL TRANSIT MONORAIL

The Authority | Hill International Authority Consultant | ORASCOM CONSTRUCTION | BOMBARDIER | Main Contractor | SENER | SHAKER CONSULTANCY GROUP | Designer

CONTRACTOR / CONSULTANT :
ENGINEERING HOUSE FOR CONSULTANCY

SCALE	CHK'D DRAWING	DATE
AS SHOWN		20.11.2024

REV	DATE	BY	DESCRIPTION	CHK	APD
A	20-11-24	E.SH	ISSUE FOR APPROVAL	A.SH	M.M

6 October Monorail
Engineering Unit
Valid For Construction

DRAWING TITLE:
6TH OF OCTOBER MONORAIL
SHOP DRAWING FOR BRIDGE 6OL11-37
STEEL TRUSS (II).
WP3

Project Code	Rubric	Initiator	Lot	Ref	Number	Revision
9 3 M 0	4 0 7	A A C	6 0 L 1 1	D W G	90386	A

-Drawing shall be updated according to the comments on the GA drawing.
-Approval is subjected to the approval of coordination package between multi-discipline.

REVIEWED WITH COMMENT
MONORAILS PROJECT

All holes are 22mm U.N.O Length & Area & Weight per piece

Mark	Profile	Grade	QTY	Length	Area	Weight
WP4	PL12*360	S355J2N	4	447.4	0.34	15.0

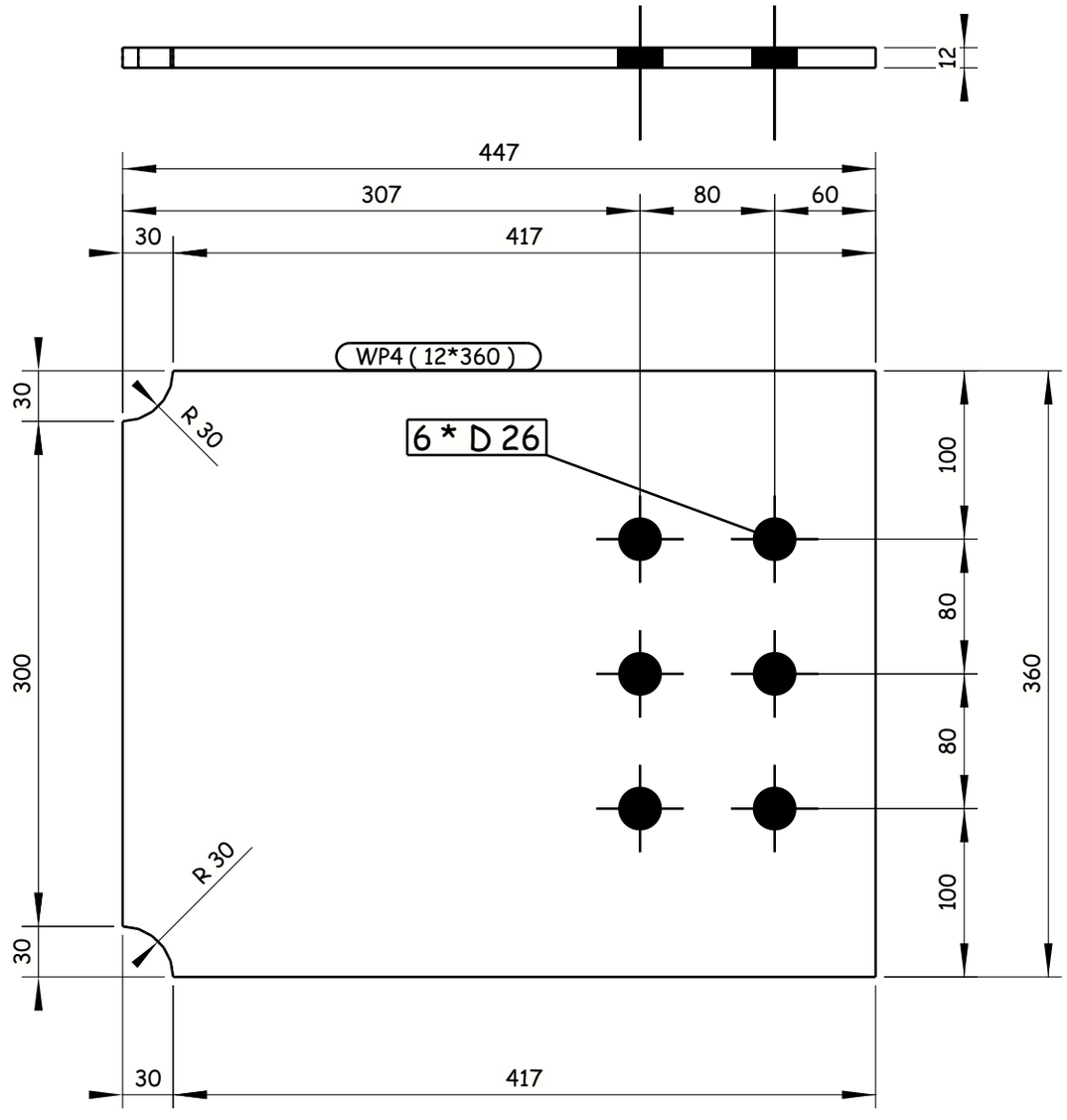

4 REQUIRED AS DRAWN E.SH WP4

GENERAL NOTES:

1. ALL DIMENSIONS ARE IN MILLIMETERS UNLESS OTHERWISE SPECIFIED.
2. LEVELS ARE IN METERS
3. DESIGN SERVICE LIFE OF 100 YEARS.
4. FLANGES OF TOP AND BOTTOM CHORDS TO BE SUPPLIED WITH IMPROVED THROUGH THICKNESS PROPERTIES Z25 ACCORDING TO EN10164.

REFERENCE DRAWINGS

1	93M-0407-SEN-6OL11-END-10118-B PAGE 01:17
2	
3	
4	
5	
6	
7	
8	
9	
10	
11	

6TH OF OCTOBER CITY RAIL TRANSIT MONORAIL &
NEW CAPITAL CITY RAIL TRANSIT MONORAIL

The Authority
Hill International
Authority Consultant

ORASCOM CONSTRUCTION
Main Contractor

BOMBARDIER
SENER
SHAKER CONSULTANCY GROUP
Designer

CONTRACTOR & CONSULTANT:
ENGINEERING HOUSE FOR CONSULTANCY

SCALE: AS SHOWN | CHK'D DRAWING | DATE: 20.11.2024

REV	DATE	BY	DESCRIPTION	CHK	APD
A	20-11-24	E.SH	ISSUE FOR APPROVAL	A.SH	M.M

6 October Monorail
Engineering Unit
Valid For Construction

DRAWING TITLE:
6TH OF OCTOBER MONORAIL
SHOP DRAWING FOR BRIDGE 6OL11-37
STEEL TRUSS (II).
WP4

Project Code	Rubric	Initiator	Lot	Ref	Number	Revision
93M	0407	AAC	60L11	DWG	90387	A

Tekla structures

-Drawing shall be updated according to the comments on the GA drawing.
-Approval is subjected to the approval of coordination package between multi-discipline.

REVIEWED WITH COMMENT
MONORAILS PROJECT

All holes are 22mm U.N.O Length & Area & Weight per piece

Mark	Profile	Grade	QTY	Length	Area	Weight
WP5	PL15*340	S355J2N	4	2575.8	1.83	102.7

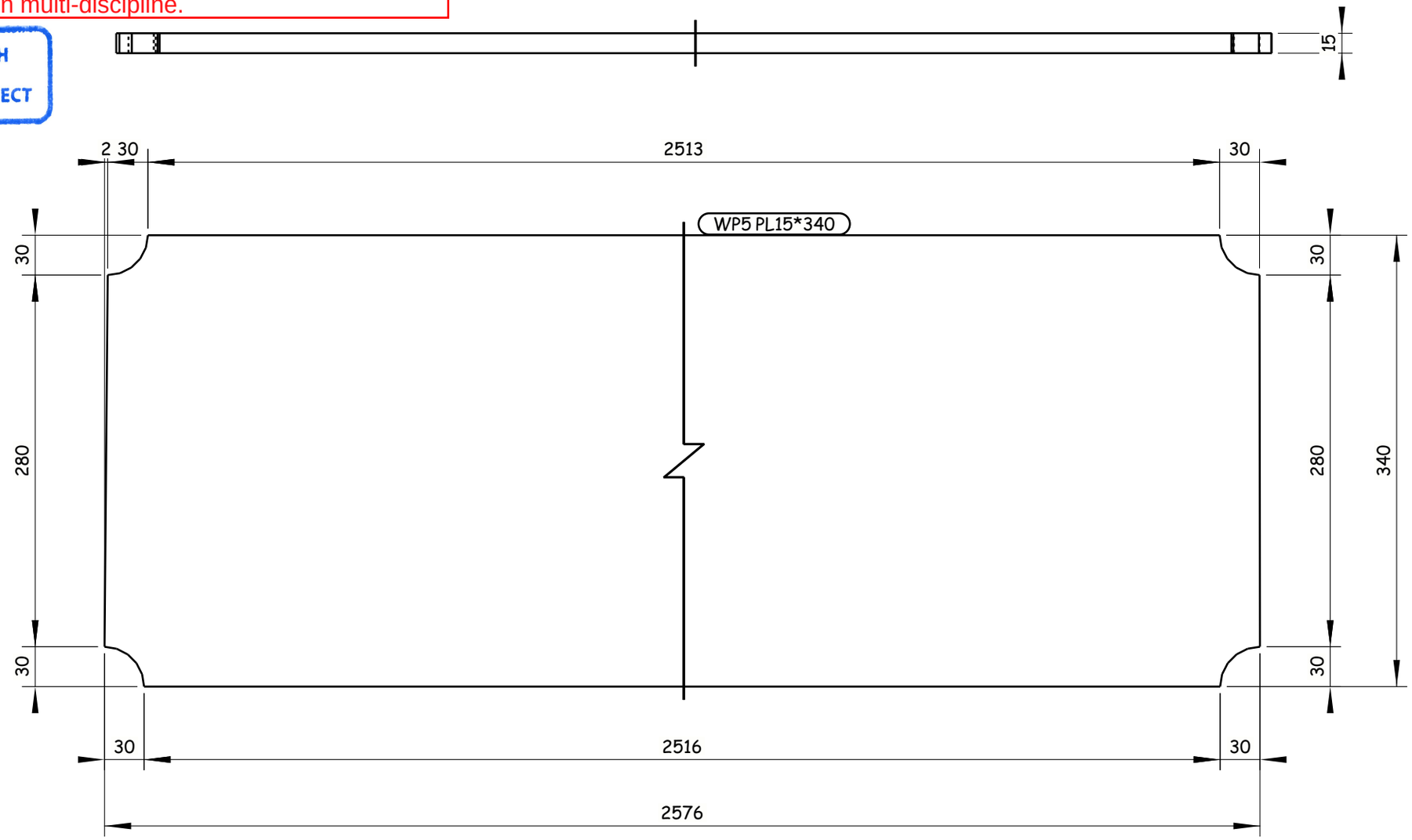

4 REQUIRED AS DRAWN E.SH WP5

6 October Monorail
Engineering Unit
Valid For Construction

GENERAL NOTES:

1. ALL DIMENSIONS ARE IN MILLIMETERS UNLESS OTHERWISE SPECIFIED.
2. LEVELS ARE IN METERS
3. DESIGN SERVICE LIFE OF 100 YEARS.
4. FLANGES OF TOP AND BOTTOM CHORDS TO BE SUPPLIED WITH IMPROVED THROUGH THICKNESS PROPERTIES Z25 ACCORDING TO EN10164.

REFERENCE DRAWINGS

1	93M-0407-SEN-6OL11-END-10118-B PAGE 01:17
2	
3	
4	
5	
6	
7	
8	
9	
10	
11	

6TH OF OCTOBER CITY RAIL TRANSIT MONORAIL &
NEW CAPITAL CITY RAIL TRANSIT MONORAIL

The Authority
Hill International
Authority Consultant

ORASCOM CONSTRUCTION
Main Contractor

BOMBARDIER
SENER
SHAKER CONSULTANCY GROUP
Designer

CONTRACTOR / CONSULTANT:
ENGINEERING HOUSE FOR CONSULTANCY

SCALE	SHOP DRAWING	DATE
AS SHOWN		20.11.2024

REV	DATE	BY	DESCRIPTION	CHK	APD
A	20-11-24	E.SH	ISSUE FOR APPROVAL	A.SH	M.M

DRAWING TITLE:
6TH OF OCTOBER MONORAIL
SHOP DRAWING FOR BRIDGE 6OL11-37
STEEL TRUSS (II).
WP5

Project Code	Rubric	Initiator	Lot	Ref	Number	Revision
93M	0407	AAC	60L11	DWG	90388	A

Tekla structures

-Drawing shall be updated according to the comments on the GA drawing.
-Approval is subjected to the approval of coordination package between multi-discipline.

REVIEWED WITH COMMENT
MONORAILS PROJECT

All holes are 22mm U.N.O Length & Area & Weight per piece

Mark	Profile	Grade	QTY	Length	Area	Weight
WP6	PL15*330	S355J2N	4	2628.1	1.82	101.7

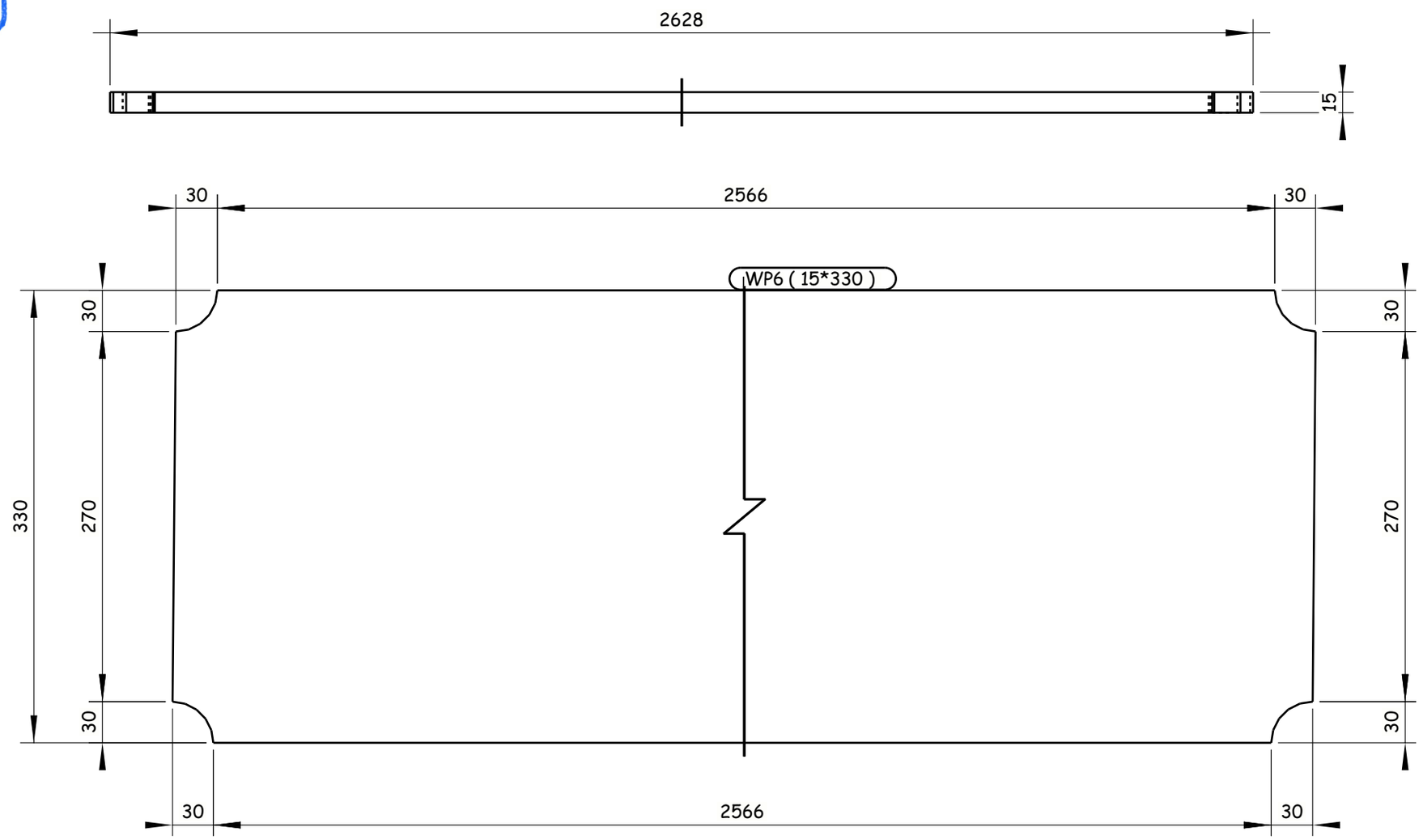

4 REQUIRED AS DRAWN E.SH WP6

GENERAL NOTES:

1. ALL DIMENSIONS ARE IN MILLIMETERS UNLESS OTHERWISE SPECIFIED.
2. LEVELS ARE IN METERS
3. DESIGN SERVICE LIFE OF 100 YEARS.
4. FLANGES OF TOP AND BOTTOM CHORDS TO BE SUPPLIED WITH IMPROVED THROUGH THICKNESS PROPERTIES Z25 ACCORDING TO EN10164.

REFERENCE DRAWINGS

1	93M-0407-SEN-6OL11-END-10118-B PAGE 01:17
2	
3	
4	
5	
6	
7	
8	
9	
10	
11	

6TH OF OCTOBER CITY RAIL TRANSIT MONORAIL &
NEW CAPITAL CITY RAIL TRANSIT MONORAIL

The Authority — Hill International — Authority Consultant
ORASCOM CONSTRUCTION — Main Contractor
BOMBARDIER
SENER / SHAKER CONSULTANCY GROUP — Designer

CONTRACTOR / CONSULTANT:
EHC ENGINEERING HOUSE FOR CONSULTANCY

6 October Monorail
Engineering Unit
Valid For Construction

REV	DATE	BY	DESCRIPTION	CHK	APD
A	20-11-24	E.SH	ISSUE FOR APPROVAL	A.SH	M.M

SCALE: AS SHOWN | SHOP DRAWING | DATE: 20.11.2024

DRAWING TITLE:
6TH OF OCTOBER MONORAIL
SHOP DRAWING FOR BRIDGE 6OL11-37
STEEL TRUSS (II).
WP6

Project Code	Rubric	Initiator	Lot	Ref	Number	Revision
9 3 M	0 4 0 7	A A C	6 0 L 1 1	D W G	90389	A

Tekla structures

-Drawing shall be updated according to the comments on the GA drawing.
-Approval is subjected to the approval of coordination package between multi-discipline.

REVIEWED WITH COMMENT
MONORAILS PROJECT

All holes are 22mm U.N.O Length & Area & Weight per piece						
WP7	PL15*340	S355J2N	4	2580.3	1.83	102.8
Mark	Profile	Grade	QTY	Length	Area	Weight

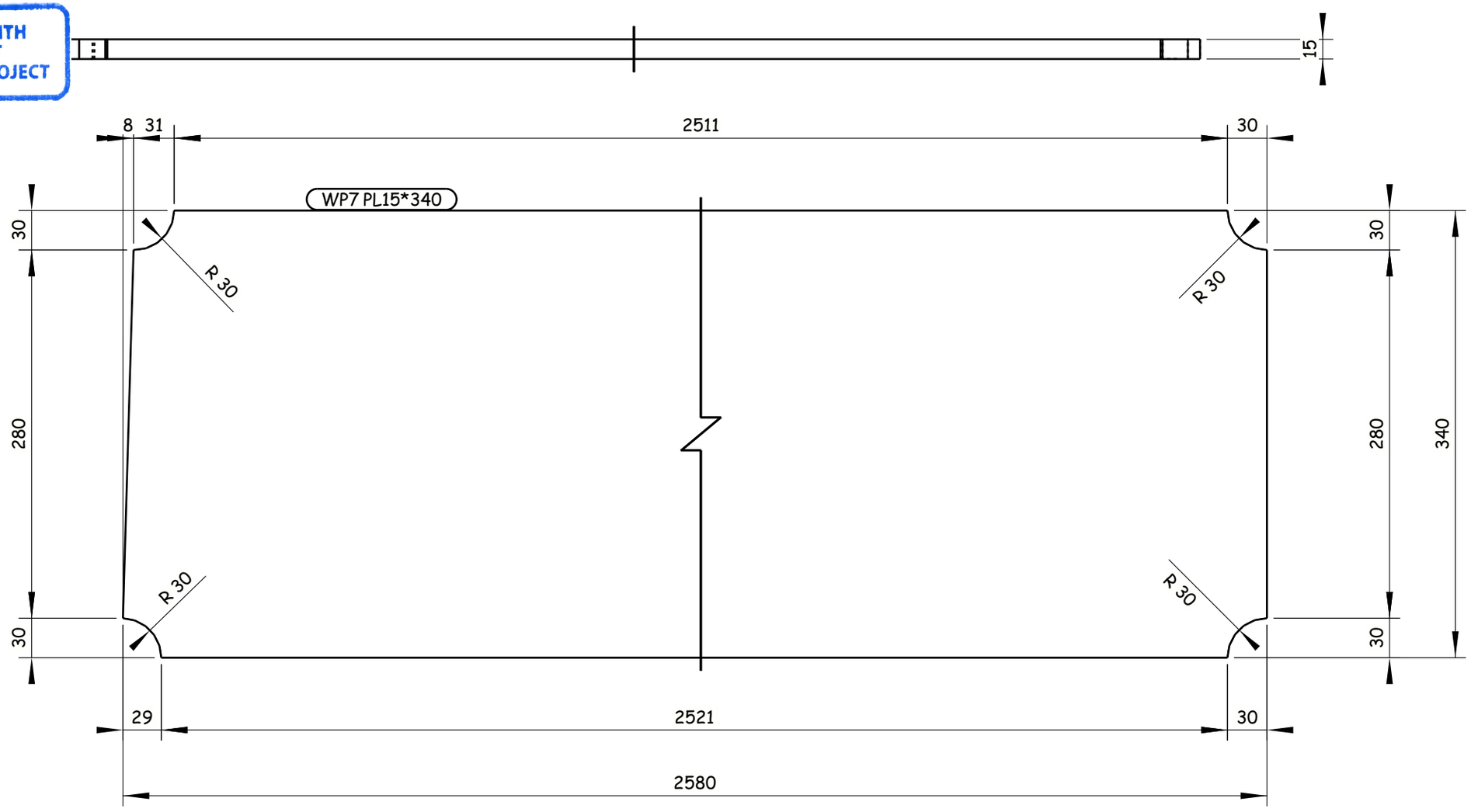

4 REQUIRED AS DRAWN E.SH WP7

GENERAL NOTES:

1. ALL DIMENSIONS ARE IN MILLIMETERS UNLESS OTHERWISE SPECIFIED.
2. LEVELS ARE IN METERS
3. DESIGN SERVICE LIFE OF 100 YEARS.
4. FLANGES OF TOP AND BOTTOM CHORDS TO BE SUPPLIED WITH IMPROVED THROUGH THICKNESS PROPERTIES Z25 ACCORDING TO EN10164.

REFERENCE DRAWINGS

1	93M-0407-SEN-6OL11-END-10118-B PAGE 01:17
2	
3	
4	
5	
6	
7	
8	
9	
10	
11	

6TH OF OCTOBER CITY RAIL TRANSIT MONORAIL &
NEW CAPITAL CITY RAIL TRANSIT MONORAIL

The Authority
Hill International
Authority Consultant

ORASCOM CONSTRUCTION
Main Contractor

SENER
SHAKER CONSULTANCY GROUP
Designer

CONTRACTOR & CONSULTANT:
ENGINEERING HOUSE FOR CONSULTANCY

SCALE: AS SHOWN | CHK'D DRAWING | DATE: 20.11.2024

REV	DATE	BY	DESCRIPTION	CHK	APD
A	20-11-24	E.SH	ISSUE FOR APPROVAL	A.SH	M.M

6 October: Monorail Engineering Unit
Valid For Construction

DRAWING TITLE:
6TH OF OCTOBER MONORAIL
SHOP DRAWING FOR BRIDGE 6OL11-37
STEEL TRUSS (II).
WP7

Project Code	Rubric	Initiator	Lot	Ref	Number	Revision
93M	0407	AAC	60L11	DWG	90390	A

Tekla structures

-Drawing shall be updated according to the comments on the GA drawing.
-Approval is subjected to the approval of coordination package between multi-discipline.

REVIEWED WITH COMMENT
MONORAILS PROJECT

All holes are 22mm U.N.O Length & Area & Weight per piece

Mark	Profile	Grade	QTY	Length	Area	Weight
WP8	PL15*340	S355J2N	4	2630.6	1.87	105.0

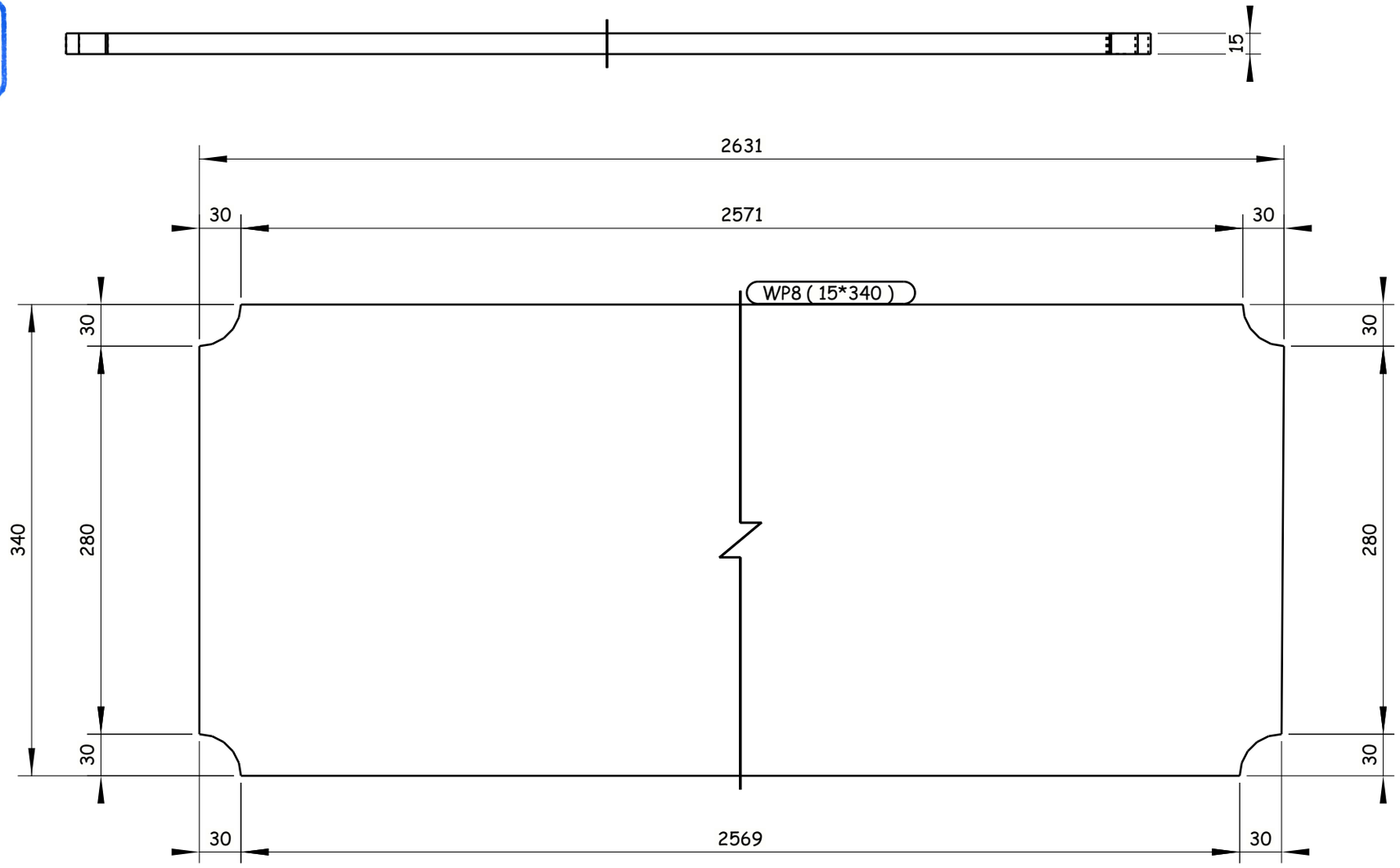

4 REQUIRED AS DRAWN E.SH WP8

GENERAL NOTES:

1. ALL DIMENSIONS ARE IN MILLIMETERS UNLESS OTHERWISE SPECIFIED.
2. LEVELS ARE IN METERS
3. DESIGN SERVICE LIFE OF 100 YEARS.
4. FLANGES OF TOP AND BOTTOM CHORDS TO BE SUPPLIED WITH IMPROVED THROUGH THICKNESS PROPERTIES Z25 ACCORDING TO EN10164.

REFERENCE DRAWINGS

1	93M-0407-SEN-6OL11-END-10118-B PAGE 01:17
2	
3	
4	
5	
6	
7	
8	
9	
10	
11	

6TH OF OCTOBER CITY RAIL TRANSIT MONORAIL &
NEW CAPITAL CITY RAIL TRANSIT MONORAIL

The Authority — Hill International — Authority Consultant
Main Contractor
Designer

CONTRACTOR/ CONSULTANT:
ENGINEERING HOUSE FOR CONSULTANCY

SCALE: AS SHOWN | SHOP DRAWING | DATE: 20.11.2024

REV	DATE	BY	DESCRIPTION	CHK	APD
A	20-11-24	E.SH	ISSUE FOR APPROVAL	A.SH	M.M

6 October Monorail
Engineering Unit
Valid For Construction

DRAWING TITLE:
6TH OF OCTOBER MONORAIL
SHOP DRAWING FOR BRIDGE 6OL11-37
STEEL TRUSS (II).
WP8

Project Code	Rubric	Initiator	Lot	Ref	Number	Revision
93M	0407	AAC	60L11	DWG	90391	A

Tekla structures

-Drawing shall be updated according to the comments on the GA drawing.
-Approval is subjected to the approval of coordination package between multi-discipline.

REVIEWED WITH COMMENT
MONORAILS PROJECT

All holes are 22mm U.N.O Length & Area & Weight per piece

Mark	Profile	Grade	QTY	Length	Area	Weight
WP9	PL12*360	S355J2N	4	2580.3	1.92	87.2

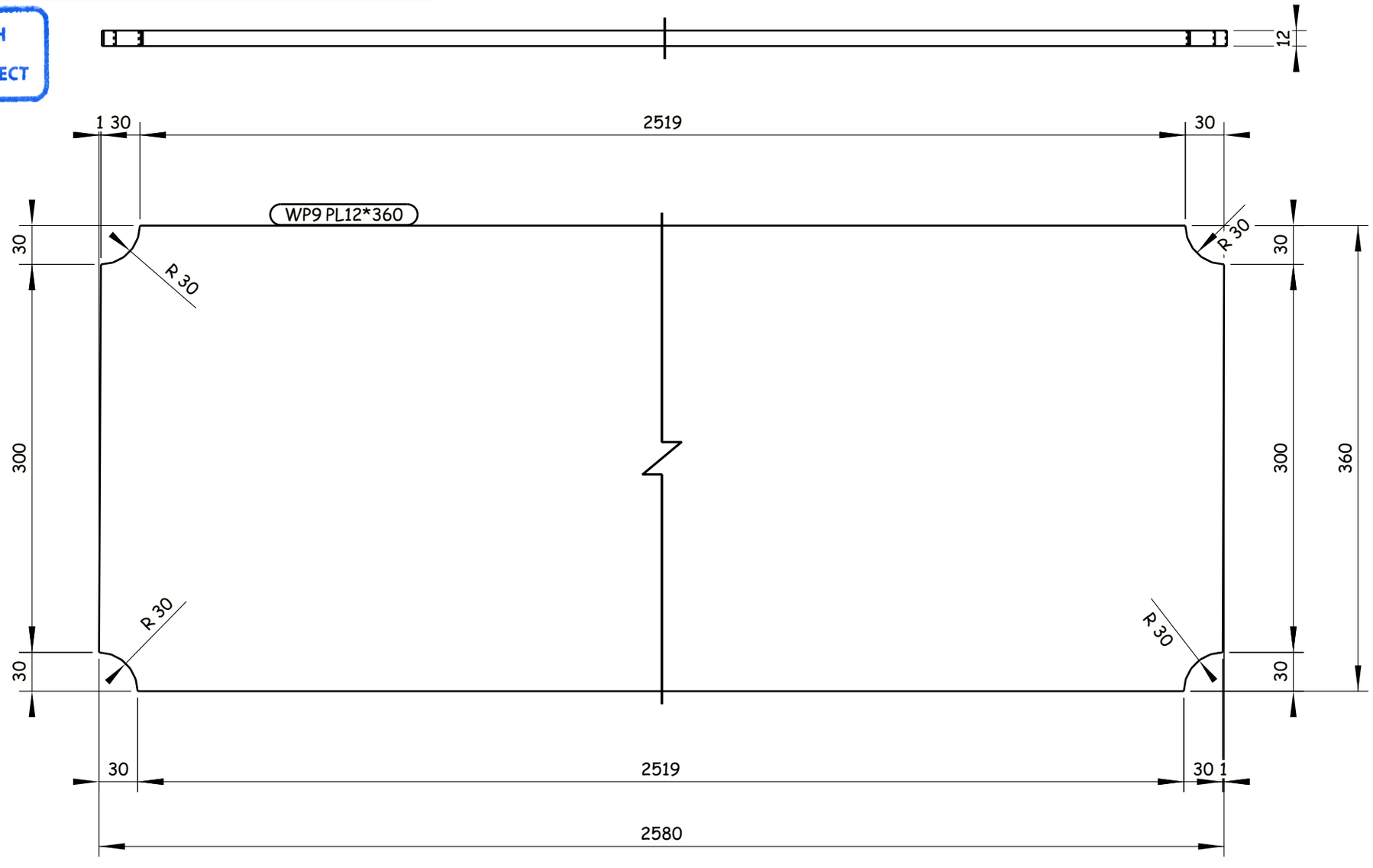

4 REQUIRED AS DRAWN E.SH WP9

6 October: Monorail
Engineering Unit
Valid For Cönstruction

GENERAL NOTES:

1. ALL DIMENSIONS ARE IN MILLIMETERS UNLESS OTHERWISE SPECIFIED.
2. LEVELS ARE IN METERS
3. DESIGN SERVICE LIFE OF 100 YEARS.
4. FLANGES OF TOP AND BOTTOM CHORDS TO BE SUPPLIED WITH IMPROVED THROUGH THICKNESS PROPERTIES Z25 ACCORDING TO EN10164.

REFERENCE DRAWINGS

1	93M-0407-SEN-6OL11-END-10118-B PAGE 01:17
2	
3	
4	
5	
6	
7	
8	
9	
10	
11	

6TH OF OCTOBER CITY RAIL TRANSIT MONORAIL &
NEW CAPITAL CITY RAIL TRANSIT MONORAIL

The Authority
Hill International
Authority Consultant

ORASCOM CONSTRUCTION
Main Contractor

BOMBARDIER
SENER
SHAKER CONSULTANCY GROUP
Designer

CONTRACTOR & CONSULTANT:
ENGINEERING HOUSE FOR CONSULTANCY

SCALE: AS SHOWN | CHK'D DRAWING | DATE: 20.11.2024

REV	DATE	BY	DESCRIPTION	CHK	APD
A	20-11-24	E.SH	ISSUE FOR APPROVAL	A.SH	M.M

DRAWING TITLE:
6TH OF OCTOBER MONORAIL
SHOP DRAWING FOR BRIDGE 6OL11-37
STEEL TRUSS (II).
WP9

Project Code	Rubric	Initiator	Lot	Ref	Number	Revision
93M	0407	AAC	60L11	DWG	90392	A

Tekla structures

-Drawing shall be updated according to the comments on the GA drawing.
-Approval is subjected to the approval of coordination package between multi-discipline.

REVIEWED WITH COMMENT
MONORAILS PROJECT

All holes are 22mm U.N.O Length & Area & Weight per piece

Mark	Profile	Grade	QTY	Length	Area	Weight
WP10	PL15*340	S355J2N	4	2611.8	1.86	104.2

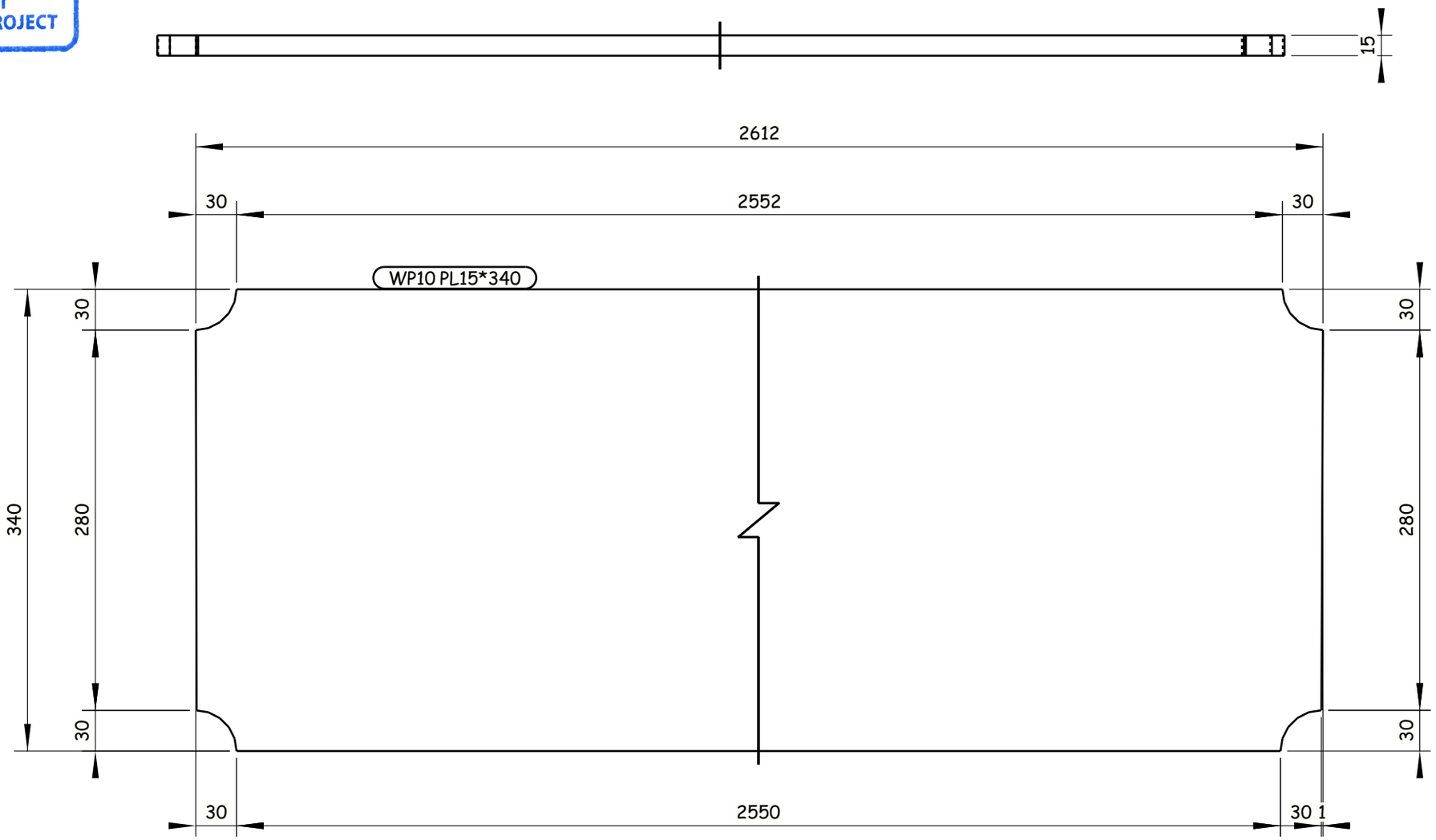

4 REQUIRED AS DRAWN E.SH WP10

Tekla structures

GENERAL NOTES:

1. ALL DIMENSIONS ARE IN MILLIMETERS UNLESS OTHERWISE SPECIFIED.
2. LEVELS ARE IN METERS
3. DESIGN SERVICE LIFE OF 100 YEARS.
4. FLANGES OF TOP AND BOTTOM CHORDS TO BE SUPPLIED WITH IMPROVED THROUGH THICKNESS PROPERTIES Z25 ACCORDING TO EN10164.

REFERENCE DRAWINGS

1	93M-0407-SEN-6OL11-END-10118-B PAGE 01:17
2	
3	
4	
5	
6	
7	
8	
9	
10	
11	

6TH OF OCTOBER CITY RAIL TRANSIT MONORAIL &
NEW CAPITAL CITY RAIL TRANSIT MONORAIL

The Authority — Hill International — Authority Consultant
ORASCOM CONSTRUCTION — Main Contractor
BOMBARDIER — SENER — SHAKER CONSULTANCY GROUP — Designer

CONTRACTOR & CONSULTANT:
ENGINEERING HOUSE FOR CONSULTANCY

SCALE	SHD DRAWING	DATE
AS SHOWN		20.11.2024

REV	DATE	BY	DESCRIPTION	CHK	APD
A	20-11-24	E.SH	ISSUE FOR APPROVAL	A.SH	M.M

6 October Monorail
Engineering Unit
Valid For Construction

DRAWING TITLE:
6TH OF OCTOBER MONORAIL
SHOP DRAWING FOR BRIDGE 6OL11-37
STEEL TRUSS (II).
WP10

Project Code	Rubric	Initiator	Lot	Ref	Number	Revision
93M	0407	AAC	60L11	DWG	90393	A

-Drawing shall be updated according to the comments on the GA drawing.
-Approval is subjected to the approval of coordination package between multi-discipline.

REVIEWED WITH COMMENT
MONORAILS PROJECT

All holes are 22mm U.N.O Length & Area & Weight per piece

Mark	Profile	Grade	QTY	Length	Area	Weight
WP11	PL12*360	S355J2N	4	2592.5	1.93	87.6

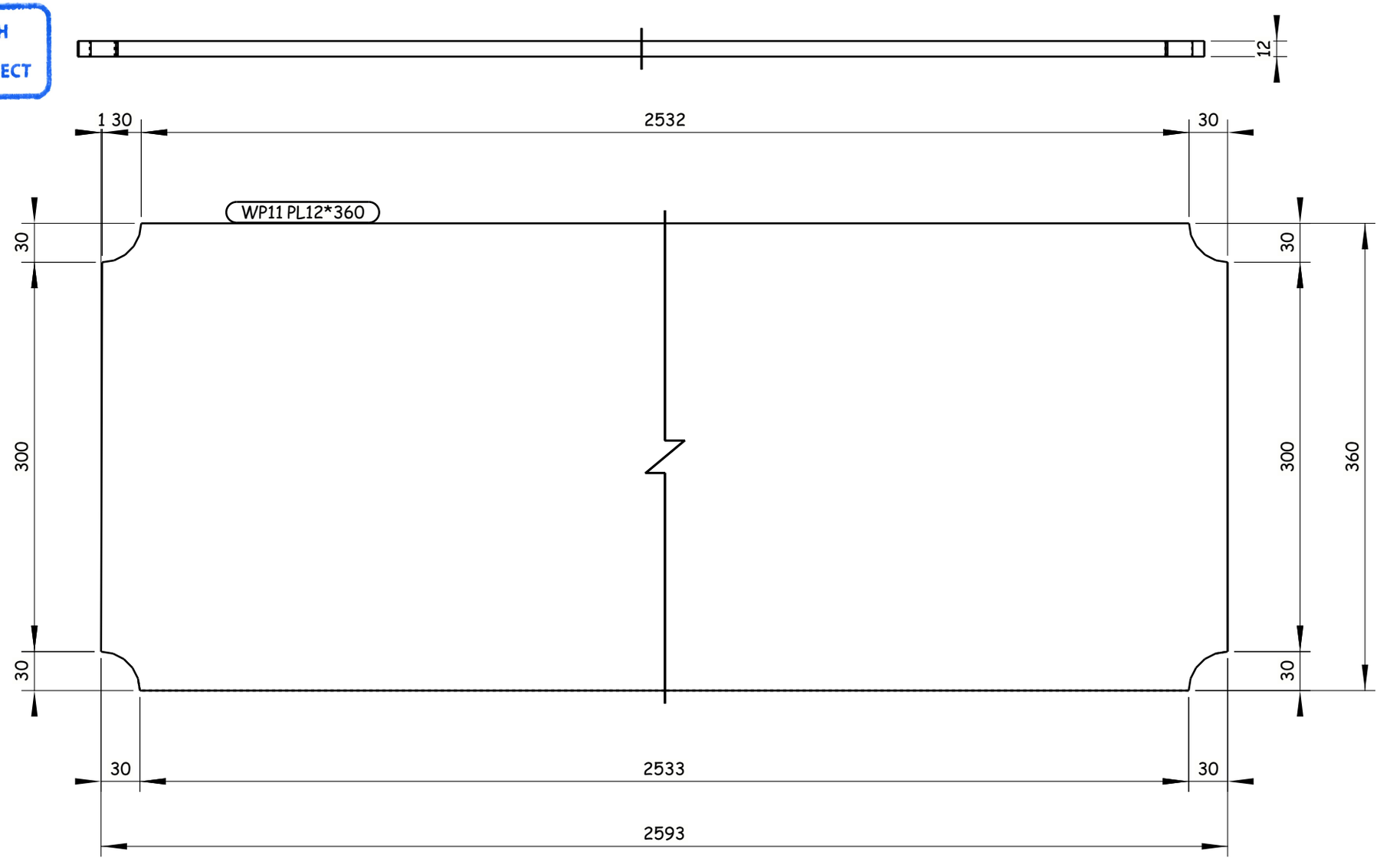

4 REQUIRED AS DRAWN E.SH WP11

Tekla structures

GENERAL NOTES:

1. ALL DIMENSIONS ARE IN MILLIMETERS UNLESS OTHERWISE SPECIFIED.
2. LEVELS ARE IN METERS
3. DESIGN SERVICE LIFE OF 100 YEARS.
4. FLANGES OF TOP AND BOTTOM CHORDS TO BE SUPPLIED WITH IMPROVED THROUGH THICKNESS PROPERTIES Z25 ACCORDING TO EN10164.

REFERENCE DRAWINGS

1	93M-0407-SEN-6OL11-END-10118-B PAGE 01:17
2	
3	
4	
5	
6	
7	
8	
9	
10	
11	

6TH OF OCTOBER CITY RAIL TRANSIT MONORAIL &
NEW CAPITAL CITY RAIL TRANSIT MONORAIL

The Authority
Hill International
Authority Consultant

Main Contractor

Designer

CONTRACTOR & CONSULTANT:
ENGINEERING HOUSE FOR CONSULTANCY

SCALE: AS SHOWN | CHK'D DRAWING | DATE: 20.11.2024

REV	DATE	BY	DESCRIPTION	CHK	APD
A	20-11-24	E.SH	ISSUE FOR APPROVAL	A.SH	M.M

6 October Monorail
Engineering Unit
Valid For Construction

DRAWING TITLE:
6TH OF OCTOBER MONORAIL
SHOP DRAWING FOR BRIDGE 6OL11-37
STEEL TRUSS (II).
WP11

Project Code	Rubric	Initiator	Lot	Ref	Number	Revision
93M	0407	AAC	60L11	DWG	90394	A

-Drawing shall be updated according to the comments on the GA drawing.
-Approval is subjected to the approval of coordination package between multi-discipline.

REVIEWED WITH COMMENT
MONORAILS PROJECT

All holes are 22mm U.N.O Length & Area & Weight per piece

Mark	Profile	Grade	QTY	Length	Area	Weight
WP12	PL12*360	S355J2N	4	2587.7	1.93	87.5

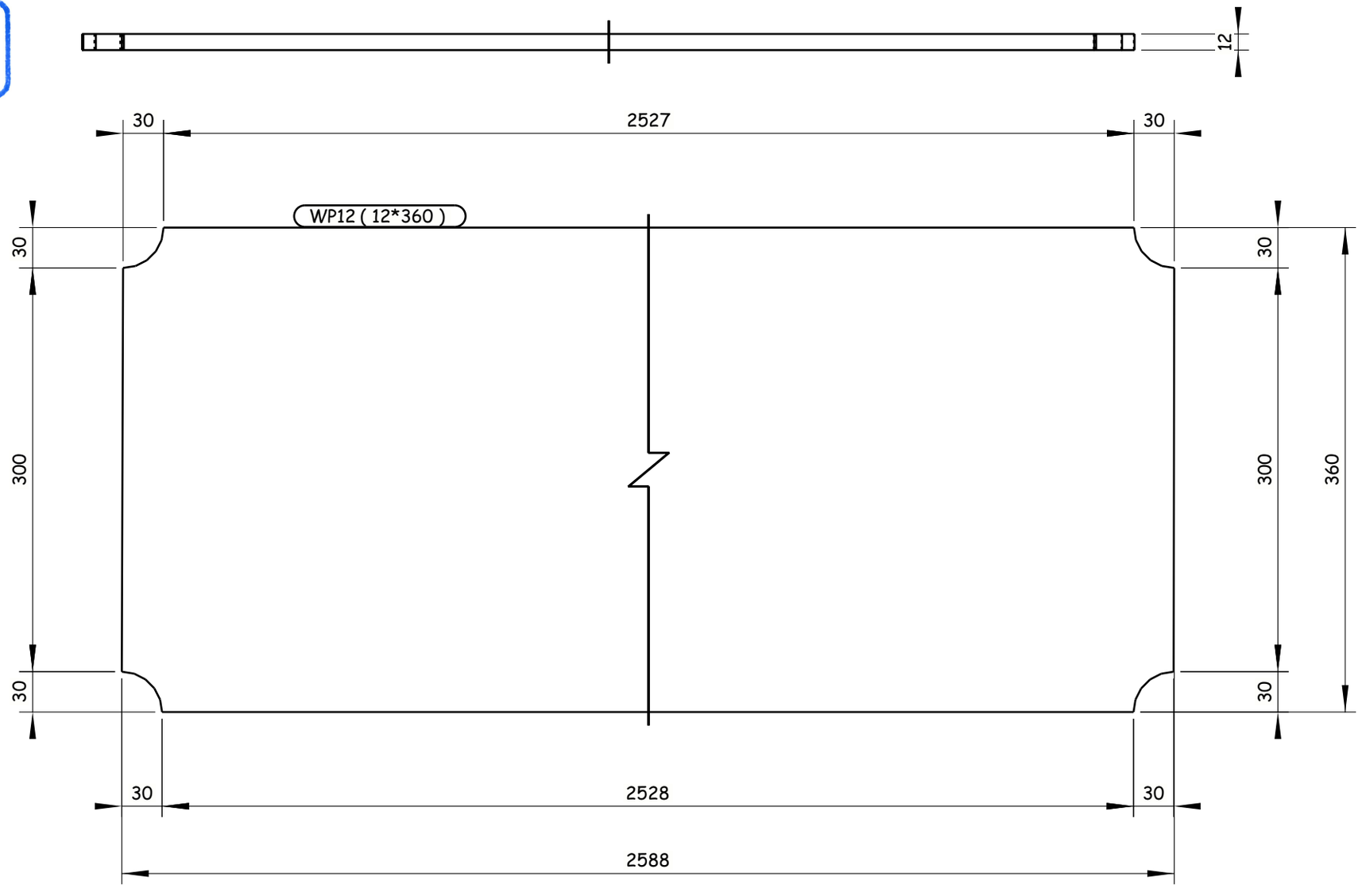

4 REQUIRED AS DRAWN E.SH WP12

GENERAL NOTES:

1. ALL DIMENSIONS ARE IN MILLIMETERS UNLESS OTHERWISE SPECIFIED.
2. LEVELS ARE IN METERS
3. DESIGN SERVICE LIFE OF 100 YEARS.
4. FLANGES OF TOP AND BOTTOM CHORDS TO BE SUPPLIED WITH IMPROVED THROUGH THICKNESS PROPERTIES Z25 ACCORDING TO EN10164.

REFERENCE DRAWINGS

1	93M-0407-SEN-6OL11-END-10118-B PAGE 01:17
2	
3	
4	
5	
6	
7	
8	
9	
10	
11	

6TH OF OCTOBER CITY RAIL TRANSIT MONORAIL &
NEW CAPITAL CITY RAIL TRANSIT MONORAIL

The Authority
Hill International
Authority Consultant

Main Contractor

Designer

CONTRACTOR & CONSULTANT:
ENGINEERING HOUSE FOR CONSULTANCY

SCALE: AS SHOWN | CHK'D DRAWING | DATE: 20.11.2024

REV	DATE	BY	DESCRIPTION	CHK	APD
A	20-11-24	E.SH	ISSUE FOR APPROVAL	A.SH	M.M

6 October Monorail
Engineering Unit
Valid For Construction

DRAWING TITLE:
6TH OF OCTOBER MONORAIL
SHOP DRAWING FOR BRIDGE 6OL11-37
STEEL TRUSS (II).
WP12

Project Code	Rubric	Initiator	Lot	Ref	Number	Revision
93M	0407	AAC	60L11	DWG	90395	A

Tekla structures

-Drawing shall be updated according to the comments on the GA drawing.
-Approval is subjected to the approval of coordination package between multi-discipline.

REVIEWED WITH COMMENT
MONORAILS PROJECT

All holes are 22mm U.N.O Length & Area & Weight per piece

Mark	Profile	Grade	QTY	Length	Area	Weight
WP13	PL30*510	S355J2N	2	4088.2	4.44	490.6

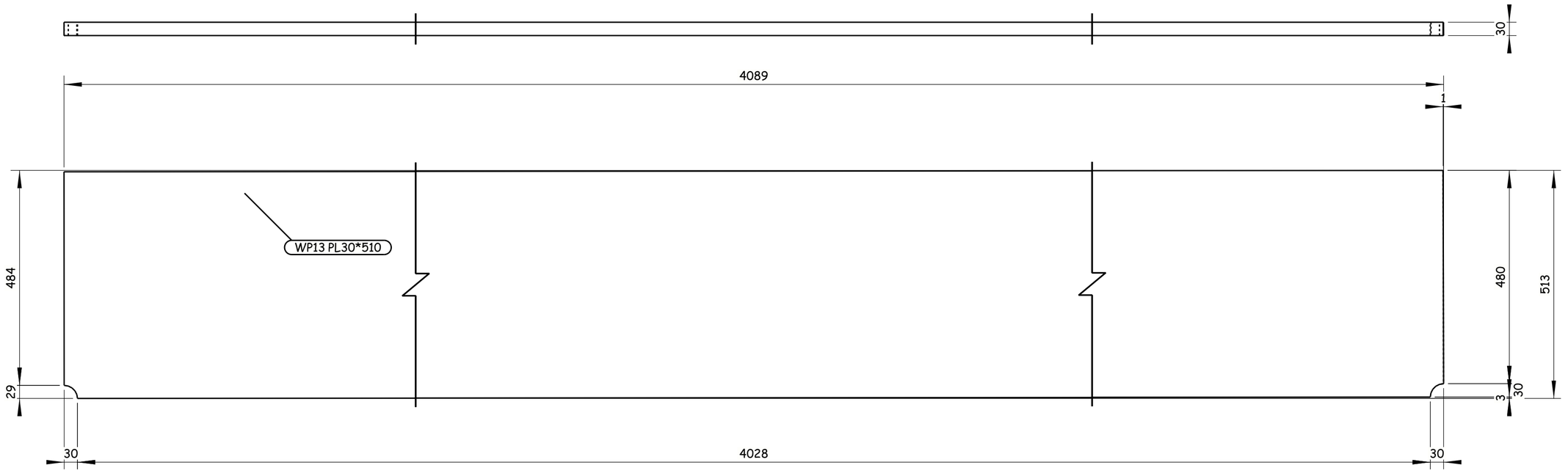

2 REQUIRED AS DRAWN E.SH WP13

GENERAL NOTES:

1. ALL DIMENSIONS ARE IN MILLIMETERS UNLESS OTHERWISE SPECIFIED.
2. LEVELS ARE IN METERS
3. DESIGN SERVICE LIFE OF 100 YEARS.
4. FLANGES OF TOP AND BOTTOM CHORDS TO BE SUPPLIED WITH IMPROVED THROUGH THICKNESS PROPERTIES Z25 ACCORDING TO EN10164.

REFERENCE DRAWINGS

1	93M-0407-SEN-6OL11-END-10118-B PAGE 01:17
2	
3	
4	
5	
6	
7	
8	
9	
10	
11	

6TH OF OCTOBER CITY RAIL TRANSIT MONORAIL &
NEW CAPITAL CITY RAIL TRANSIT MONORAIL

The Authority | Hill International Authority Consultant | ORASCOM CONSTRUCTION | Main Contractor | BOMBARDIER | SENER | SHAKER CONSULTANCY GROUP | Designer

CONTRACTOR
CONSULTANT:
ENGINEERING HOUSE FOR CONSULTANCY

SCALE		DATE
AS SHOWN	SHOP DRAWING	20.11.2024

REV	DATE	BY	DESCRIPTION	CHK	APD
A	20-11-24	E.SH	ISSUE FOR APPROVAL	A.SH	M.M

6 October Monorail
Engineering Unit
Valid For Construction

DRAWING TITLE:
6TH OF OCTOBER MONORAIL
SHOP DRAWING FOR BRIDGE 6OL11-37
STEEL TRUSS (II).
WP13

Project Code	Rubric	Initiator	Lot	Ref	Number	Revision
93M	0407	AAC	60L11	DWG	90396	A

Tekla structures

-Drawing shall be updated according to the comments on the GA drawing.
-Approval is subjected to the approval of coordination package between multi-discipline.

REVIEWED WITH COMMENT
MONORAILS PROJECT

All holes are 22mm U.N.O Length & Area & Weight per piece

Mark	Profile	Grade	QTY	Length	Area	Weight
WP14	PL15*540	S355J2N	4	4085.6	4.55	259.6

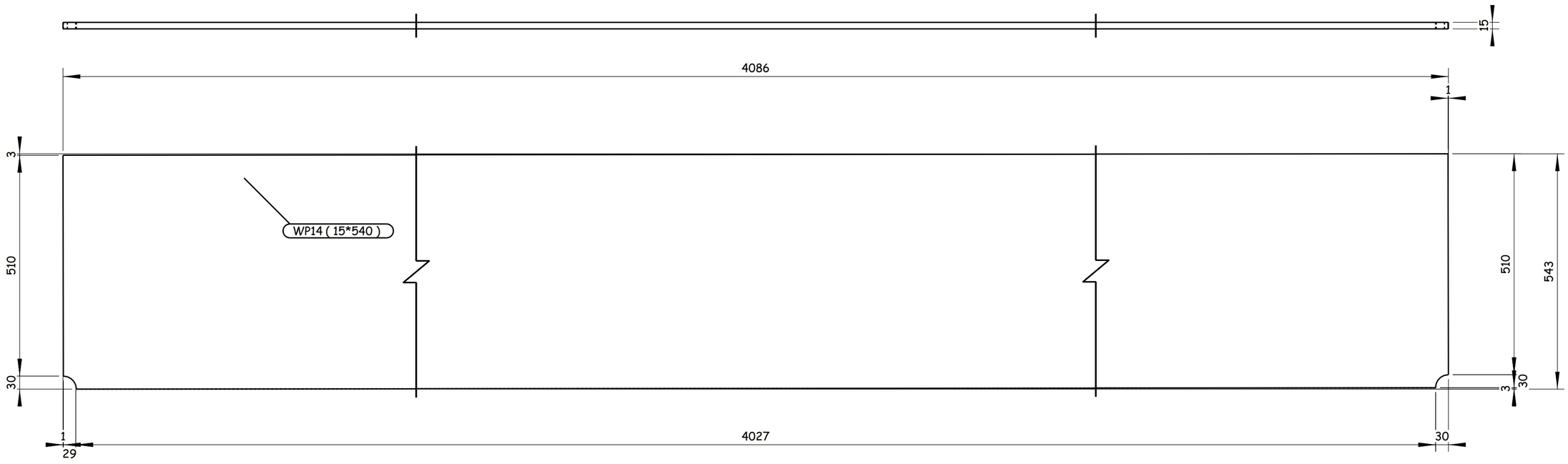

4 REQUIRED AS DRAWN E.SH WP14

GENERAL NOTES:

1. ALL DIMENSIONS ARE IN MILLIMETERS UNLESS OTHERWISE SPECIFIED.
2. LEVELS ARE IN METERS
3. DESIGN SERVICE LIFE OF 100 YEARS.
4. FLANGES OF TOP AND BOTTOM CHORDS TO BE SUPPLIED WITH IMPROVED THROUGH THICKNESS PROPERTIES Z25 ACCORDING TO EN10164.

REFERENCE DRAWINGS

1	93M-0407-SEN-6OL11-END-10118-B PAGE 01:17
2	
3	
4	
5	
6	
7	
8	
9	
10	
11	

6TH OF OCTOBER CITY RAIL TRANSIT MONORAIL &
NEW CAPITAL CITY RAIL TRANSIT MONORAIL

The Authority
Hill International
Authority Consultant
Main Contractor
Designer

CONTRACTOR
CONSULTANT
ENGINEERING HOUSE FOR CONSULTANCY

SCALE: AS SHOWN
SHOP DRAWING
DATE: 20.11.2024

REV	DATE	BY	DESCRIPTION	CHK	APD
A	20-11-24	E.SH	ISSUE FOR APPROVAL	A.SH	M.M

6 October Monorail
Engineering Unit
Valid For Construction

DRAWING TITLE:
6TH OF OCTOBER MONORAIL
SHOP DRAWING FOR BRIDGE 6OL11-37
STEEL TRUSS (II).
WP14

Project Code	Rubric	Initiator	Lot	Ref	Number	Revision
93M	0407	AAC	60L11	DWG	90397	A

Tekla structures

-Drawing shall be updated according to the comments on the GA drawing.
-Approval is subjected to the approval of coordination package between multi-discipline.

REVIEWED WITH COMMENT
MONORAILS PROJECT

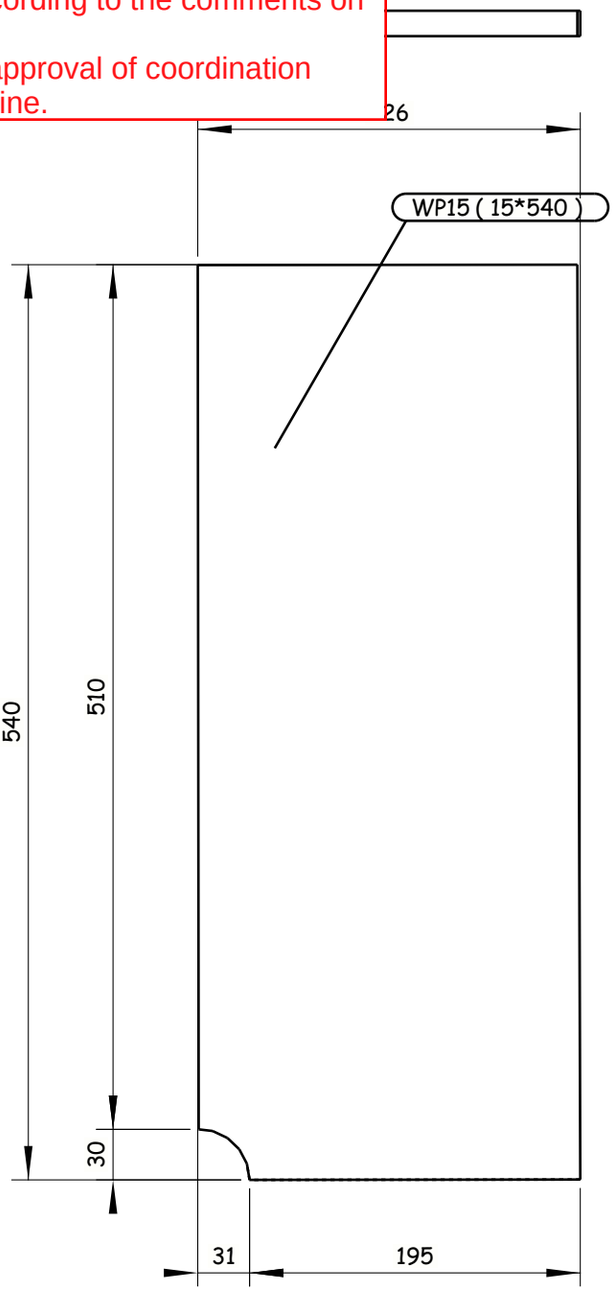

All holes are 22mm U.N.O Length & Area & Weight per piece

Mark	Profile	Grade	QTY	Length	Area	Weight
WP15	PL15*224.1	S355J2N	4	540.0	0.26	14.2

4 REQUIRED AS DRAWN E.SH WP15

Tekla structures

GENERAL NOTES:

1. ALL DIMENSIONS ARE IN MILLIMETERS UNLESS OTHERWISE SPECIFIED.
2. LEVELS ARE IN METERS
3. DESIGN SERVICE LIFE OF 100 YEARS.
4. FLANGES OF TOP AND BOTTOM CHORDS TO BE SUPPLIED WITH IMPROVED THROUGH THICKNESS PROPERTIES Z25 ACCORDING TO EN10164.

REFERENCE DRAWINGS

1	93M-0407-SEN-6OL11-END-10118-B PAGE 01:17
2	
3	
4	
5	
6	
7	
8	
9	
10	
11	

6TH OF OCTOBER CITY RAIL TRANSIT MONORAIL &
NEW CAPITAL CITY RAIL TRANSIT MONORAIL

The Authority — Authority Consultant
Hill International — Authority Consultant
ORASCOM CONSTRUCTION — Main Contractor
BOMBARDIER — Main Contractor
SENER — Designer
SHAKER CONSULTANCY GROUP — Designer

CONTRACTOR & CONSULTANT:
ENGINEERING HOUSE FOR CONSULTANCY

6 October Monorail
Engineering Unit
Valid For Construction

SCALE: AS SHOWN | SHOP DRAWING | DATE: 20.11.2024

REV	DATE	BY	DESCRIPTION	CHK	APD
A	20-11-24	E.SH	ISSUE FOR APPROVAL	A.SH	M.M

DRAWING TITLE:
6TH OF OCTOBER MONORAIL
SHOP DRAWING FOR BRIDGE 6OL11-37
STEEL TRUSS (II).
WP15

Project Code	Rubric	Initiator	Lot	Ref	Number	Revision
93M	0407	AAC	60L11	DWG	90398	A

-Drawing shall be updated according to the comments on the GA drawing.
-Approval is subjected to the approval of coordination package between multi-discipline.

REVIEWED WITH COMMENT
MONORAILS PROJECT

All holes are 22mm U.N.O Length & Area & Weight per piece

Mark	Profile	Grade	QTY	Length	Area	Weight
WP16	PL30*510	S355J2N	4	4087.7	4.44	490.5

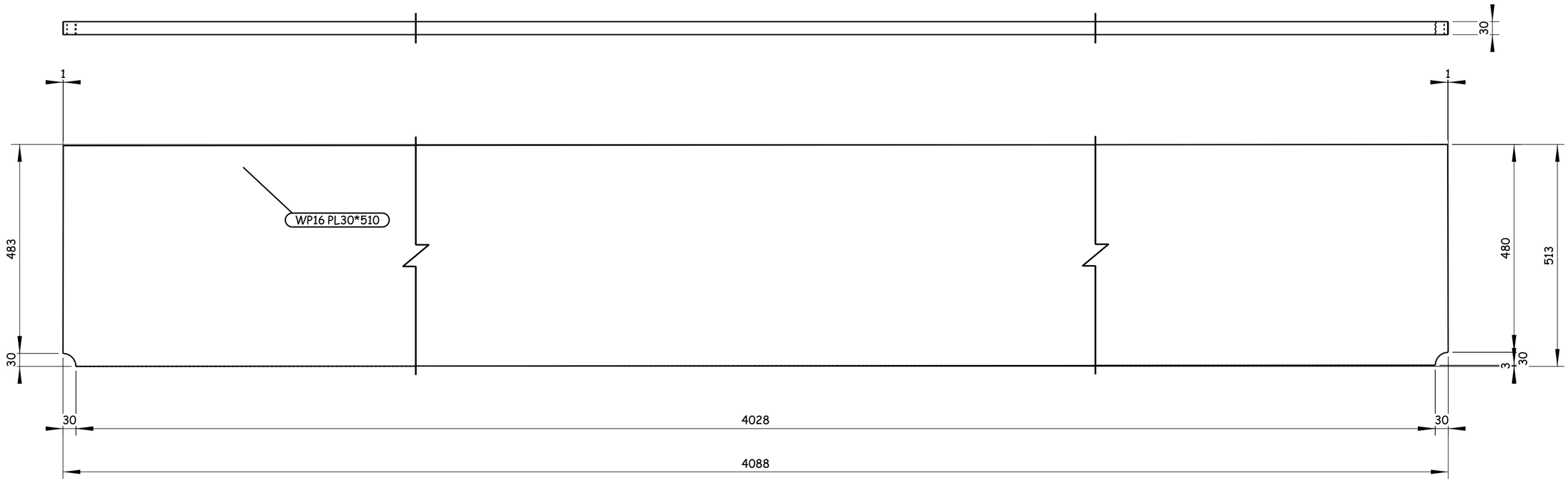

4 REQUIRED AS DRAWN E.SH WP16

GENERAL NOTES:

1. ALL DIMENSIONS ARE IN MILLIMETERS UNLESS OTHERWISE SPECIFIED.
2. LEVELS ARE IN METERS
3. DESIGN SERVICE LIFE OF 100 YEARS.
4. FLANGES OF TOP AND BOTTOM CHORDS TO BE SUPPLIED WITH IMPROVED THROUGH THICKNESS PROPERTIES Z25 ACCORDING TO EN10164.

REFERENCE DRAWINGS

1	93M-0407-SEN-6OL11-END-10118-B PAGE 01:17
2	
3	
4	
5	
6	
7	
8	
9	
10	
11	

6TH OF OCTOBER CITY RAIL TRANSIT MONORAIL &
NEW CAPITAL CITY RAIL TRANSIT MONORAIL

The Authority — Hill International — Authority Consultant
ORASCOM CONSTRUCTION — Main Contractor
BOMBARDIER
SENER — SHAKER CONSULTANCY GROUP — Designer

CONTRACTOR:
CONSULTANT:
ENGINEERING HOUSE FOR CONSULTANCY

SCALE	SHOP DRAWING	DATE
AS SHOWN		20.11.2024

REV	DATE	BY	DESCRIPTION	CHK	APD
A	20-11-24	E.SH	ISSUE FOR APPROVAL	A.SH	M.M

6 October Monorail
Engineering Unit
Valid For Construction

DRAWING TITLE:
6TH OF OCTOBER MONORAIL
SHOP DRAWING FOR BRIDGE 6OL11-37
STEEL TRUSS (II).
WP16

Project Code	Rubric	Initiator	Lot	Ref	Number	Revision
93M	0407	AAC	6OL11	DWG	90399	A

Tekla structures

-Drawing shall be updated according to the comments on the GA drawing.
-Approval is subjected to the approval of coordination package between multi-discipline.

REVIEWED WITH COMMENT
MONORAILS PROJECT

All holes are 22mm U.N.O Length & Area & Weight per piece

Mark	Profile	Grade	QTY	Length	Area	Weight
WP17	PL30*510	S355J2N	4	2039.0	2.23	244.7

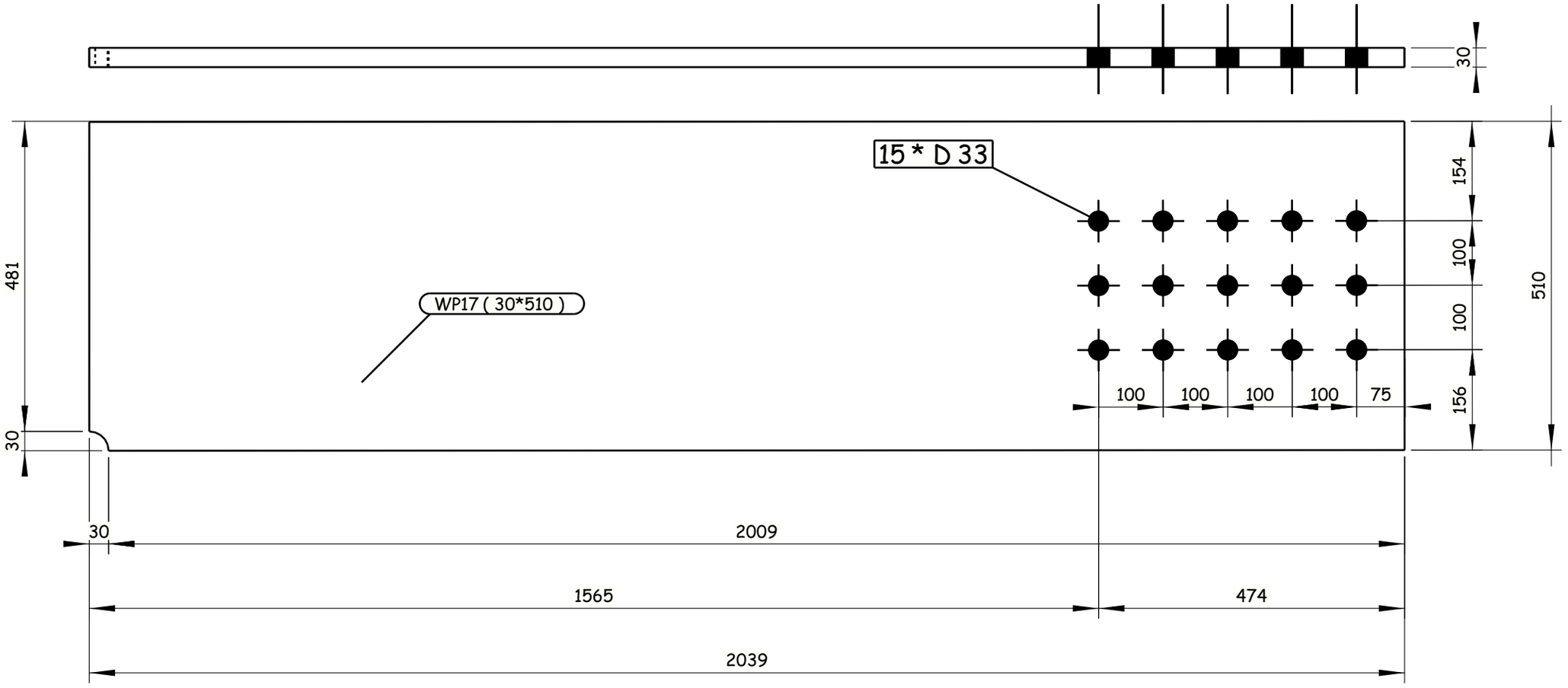

4 REQUIRED AS DRAWN E.SH WP17

GENERAL NOTES:

1. ALL DIMENSIONS ARE IN MILLIMETERS UNLESS OTHERWISE SPECIFIED.
2. LEVELS ARE IN METERS
3. DESIGN SERVICE LIFE OF 100 YEARS.
4. FLANGES OF TOP AND BOTTOM CHORDS TO BE SUPPLIED WITH IMPROVED THROUGH THICKNESS PROPERTIES Z25 ACCORDING TO EN10164.

REFERENCE DRAWINGS

1	93M-0407-SEN-6OL11-END-10118-B PAGE 01:17
2	
3	
4	
5	
6	
7	
8	
9	
10	
11	

6TH OF OCTOBER CITY RAIL TRANSIT MONORAIL &
NEW CAPITAL CITY RAIL TRANSIT MONORAIL

The Authority
Hill International
Authority Consultant

Main Contractor

Designer

CONTRACTOR & CONSULTANT:
ENGINEERING HOUSE FOR CONSULTANCY

SCALE: AS SHOWN | CHK'D DRAWING | DATE: 20.11.2024

REV	DATE	BY	DESCRIPTION	CHK	APD
A	20-11-24	E.SH	ISSUE FOR APPROVAL	A.SH	M.M

6 October Monorail
Engineering Unit
Valid For Construction

DRAWING TITLE:
6TH OF OCTOBER MONORAIL
SHOP DRAWING FOR BRIDGE 6OL11-37
STEEL TRUSS (II).
WP17

Project Code	Rubric	Initiator	Lot	Ref	Number	Revision
93M	04 07	AAC	60 L11	DWG	90400	A

Tekla structures

All holes are 22mm U.N.O Length & Area & Weight per piece						
WP18	PL20*520	S355J2N	4	3324.3	3.60	270.9
Mark	Profile	Grade	QTY	Length	Area	Weight

-Drawing shall be updated according to the comments on the GA drawing.
-Approval is subjected to the approval of coordination package

REVIEWED WITH COMMENT
MONORAILS PROJECT

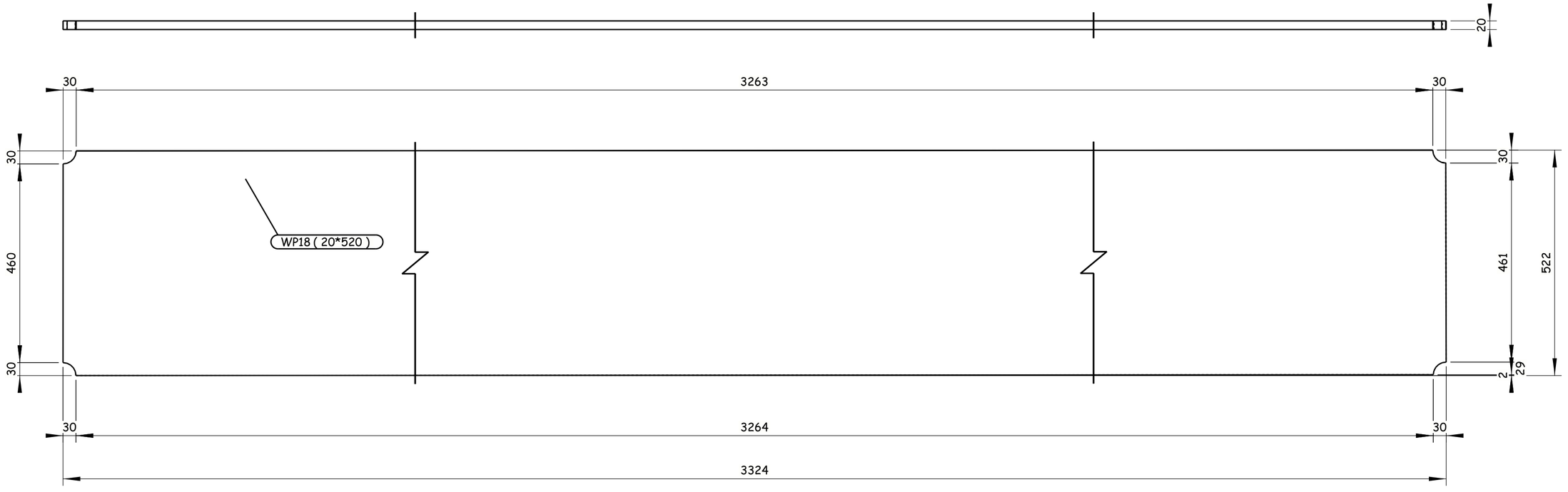

4 REQUIRED AS DRAWN E.SH WP18

Tekla structures

GENERAL NOTES:

1. ALL DIMENSIONS ARE IN MILLIMETERS UNLESS OTHERWISE SPECIFIED.
2. LEVELS ARE IN METERS
3. DESIGN SERVICE LIFE OF 100 YEARS.
4. FLANGES OF TOP AND BOTTOM CHORDS TO BE SUPPLIED WITH IMPROVED THROUGH THICKNESS PROPERTIES Z25 ACCORDING TO EN10164.

REFERENCE DRAWINGS

1	93M-0407-SEN-6OL11-END-10118-B PAGE 01:17
2	
3	
4	
5	
6	
7	
8	
9	
10	
11	

6TH OF OCTOBER CITY RAIL TRANSIT MONORAIL &
NEW CAPITAL CITY RAIL TRANSIT MONORAIL

The Authority — Authority Consultant: Hill International — Main Contractor: ORASCOM CONSTRUCTION, BOMBARDIER — Designer: SENER, SHAKER CONSULTANCY GROUP

CONTRACTOR
CONSULTANT:

ENGINEERING HOUSE FOR CONSULTANCY

SCALE	SHOP DRAWING	DATE
AS SHOWN		20.11.2024

REV	DATE	BY	DESCRIPTION	CHK	APD
A	20-11-24	E.SH	ISSUE FOR APPROVAL	A.SH	M.M

6 October Monorail
Engineering Unit
Valid For Construction

DRAWING TITLE:
6TH OF OCTOBER MONORAIL
SHOP DRAWING FOR BRIDGE 6OL11-37
STEEL TRUSS (II).
WP18

Project Code	Rubric	Initiator	Lot	Ref	Number	Revision
9 3 M	0 4 0 7	A A C	6 0 L 1 1	D W G	90401	A

All holes are 22mm U.N.O Length & Area & Weight per piece

Mark	Profile	Grade	QTY	Length	Area	Weight
WP19	PL20*520	S355J2N	4	2572.5	2.80	209.8

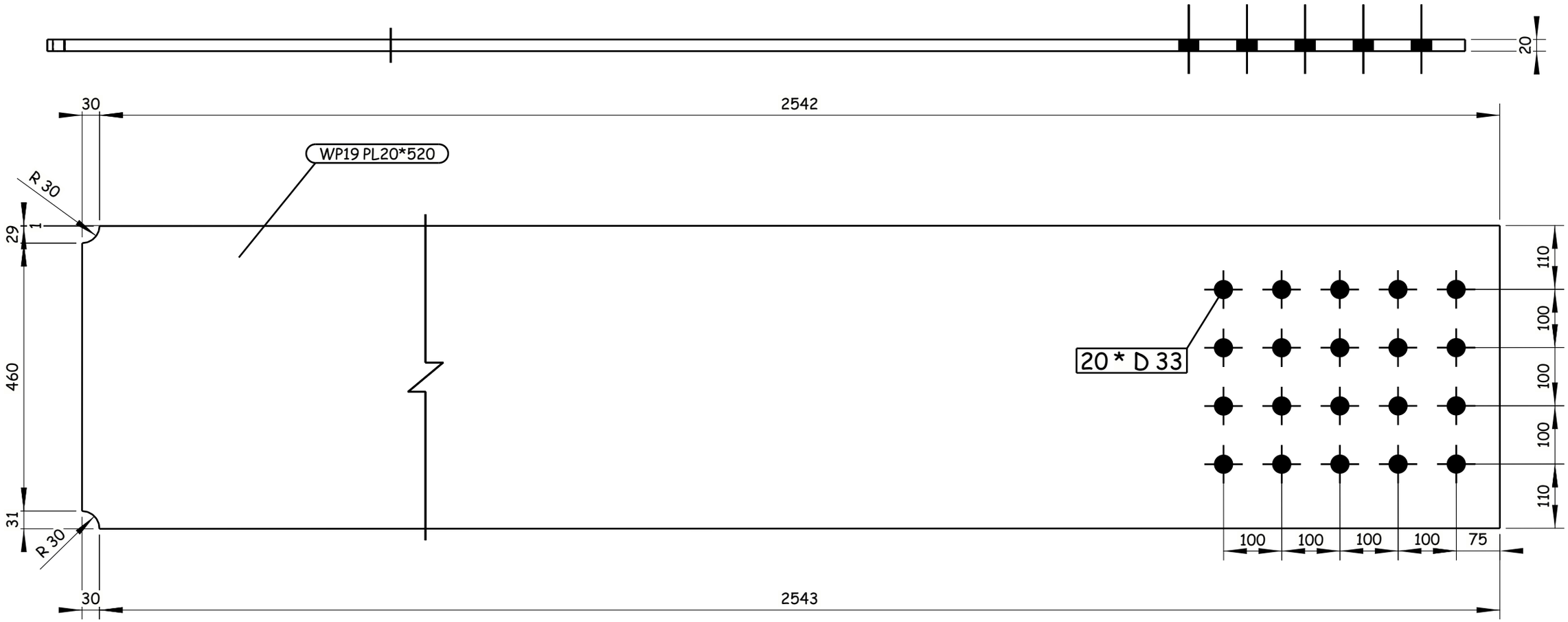

-Drawing shall be updated according to the comments on the GA drawing.
-Approval is subjected to the approval of coordination package between multi-discipline.

REVIEWED WITH COMMENT
MONORAILS PROJECT

4 REQUIRED AS DRAWN E.SH WP19

6 October Monorail
Engineering Unit
Valid For Construction

Tekla structures

GENERAL NOTES:

1. ALL DIMENSIONS ARE IN MILLIMETERS UNLESS OTHERWISE SPECIFIED.
2. LEVELS ARE IN METERS
3. DESIGN SERVICE LIFE OF 100 YEARS.
4. FLANGES OF TOP AND BOTTOM CHORDS TO BE SUPPLIED WITH IMPROVED THROUGH THICKNESS PROPERTIES Z25 ACCORDING TO EN10164.

REFERENCE DRAWINGS

1	93M-0407-SEN-6OL11-END-10118-B PAGE 01:17
2	
3	
4	
5	
6	
7	
8	
9	
10	
11	

6TH OF OCTOBER CITY RAIL TRANSIT MONORAIL &
NEW CAPITAL CITY RAIL TRANSIT MONORAIL

The Authority
Hill International
Authority Consultant

ORASCOM CONSTRUCTION
Main Contractor

BOMBARDIER
SENER
SHAKER CONSULTANCY GROUP
Designer

CONTRACTOR / CONSULTANT:
ENGINEERING HOUSE FOR CONSULTANCY

SCALE	CHK'D DRAWING	DATE
AS SHOWN		20.11.2024

REV	DATE	BY	DESCRIPTION	CHK	APD
A	20-11-24	E.SH	ISSUE FOR APPROVAL	A.SH	M.M

DRAWING TITLE:
6TH OF OCTOBER MONORAIL
SHOP DRAWING FOR BRIDGE 6OL11-37
STEEL TRUSS (II).
WP19

Project Code	Rubric	Initiator	Lot	Ref	Number	Revision
93M	0407	AAC	60L11	DWG	90402	A

-Drawing shall be updated according to the comments on the GA drawing.
-Approval is subjected to the approval of coordination package between multi-discipline.

REVIEWED WITH COMMENT
MONORAILS PROJECT

All holes are 22mm U.N.O Length & Area & Weight per piece

Mark	Profile	Grade	QTY	Length	Area	Weight
WP20	PL20*550	S355J2N	4	3328.1	3.81	286.8

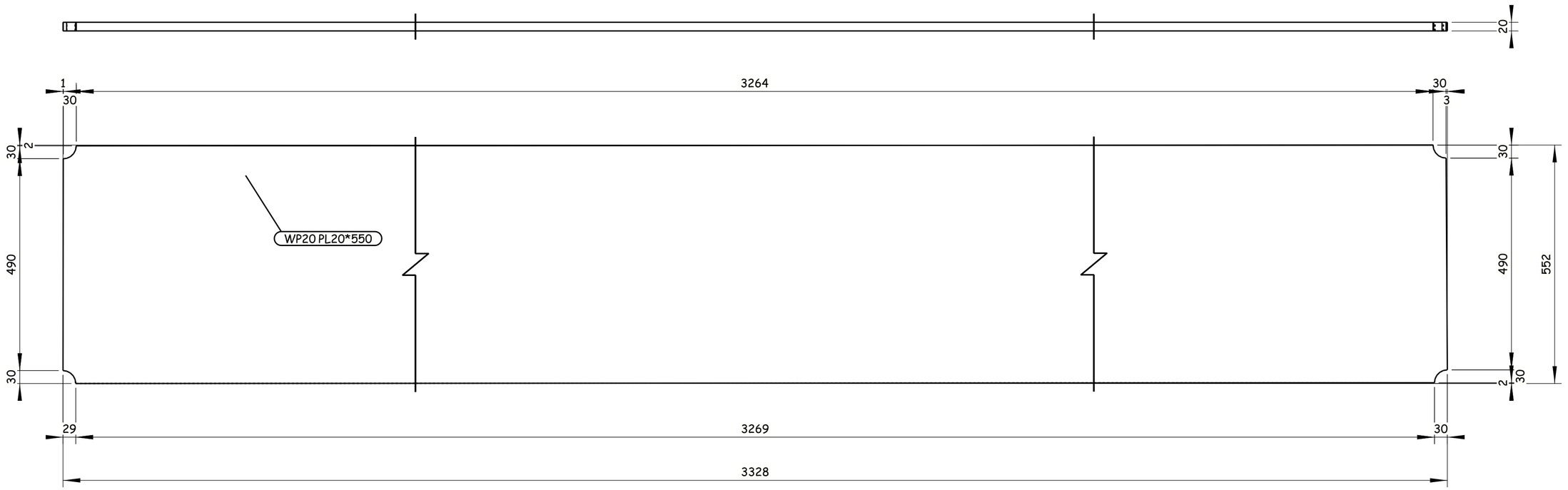

4 REQUIRED AS DRAWN E.SH WP20

GENERAL NOTES:

1. ALL DIMENSIONS ARE IN MILLIMETERS UNLESS OTHERWISE SPECIFIED.
2. LEVELS ARE IN METERS
3. DESIGN SERVICE LIFE OF 100 YEARS.
4. FLANGES OF TOP AND BOTTOM CHORDS TO BE SUPPLIED WITH IMPROVED THROUGH THICKNESS PROPERTIES Z25 ACCORDING TO EN10164.

REFERENCE DRAWINGS

1	93M-0407-SEN-6OL11-END-10118-B PAGE 01:17
2	
3	
4	
5	
6	
7	
8	
9	
10	
11	

6TH OF OCTOBER CITY RAIL TRANSIT MONORAIL &
NEW CAPITAL CITY RAIL TRANSIT MONORAIL

The Authority
Hill International
Authority Consultant

ORASCOM CONSTRUCTION
Main Contractor

BOMBARDIER
SENER
SHAKER CONSULTANCY GROUP
Designer

CONTRACTOR
CONSULTANT
ENGINEERING HOUSE FOR CONSULTANCY

SCALE: AS SHOWN
SHOP DRAWING
DATE: 20.11.2024

REV	DATE	BY	DESCRIPTION	CHK	APD
A	20-11-24	E.SH	ISSUE FOR APPROVAL	A.SH	M.M

6 October Monorail
Engineering Unit
Valid For Construction

DRAWING TITLE:
6TH OF OCTOBER MONORAIL
SHOP DRAWING FOR BRIDGE 6OL11-37
STEEL TRUSS (II).
WP20

Project Code	Rubric	Initiator	Lot	Ref	Number	Revision
93M	0407	AAC	60L11	DWG	90403	A

Tekla structures

-Drawing shall be updated according to the comments on the GA drawing.
-Approval is subjected to the approval of coordination package between multi-discipline.

REVIEWED WITH COMMENT
MONORAILS PROJECT

All holes are 22mm U.N.O Length & Area & Weight per piece

Mark	Profile	Grade	QTY	Length	Area	Weight
WP21	PL30*510	S355J2N	2	4088.4	4.44	490.7

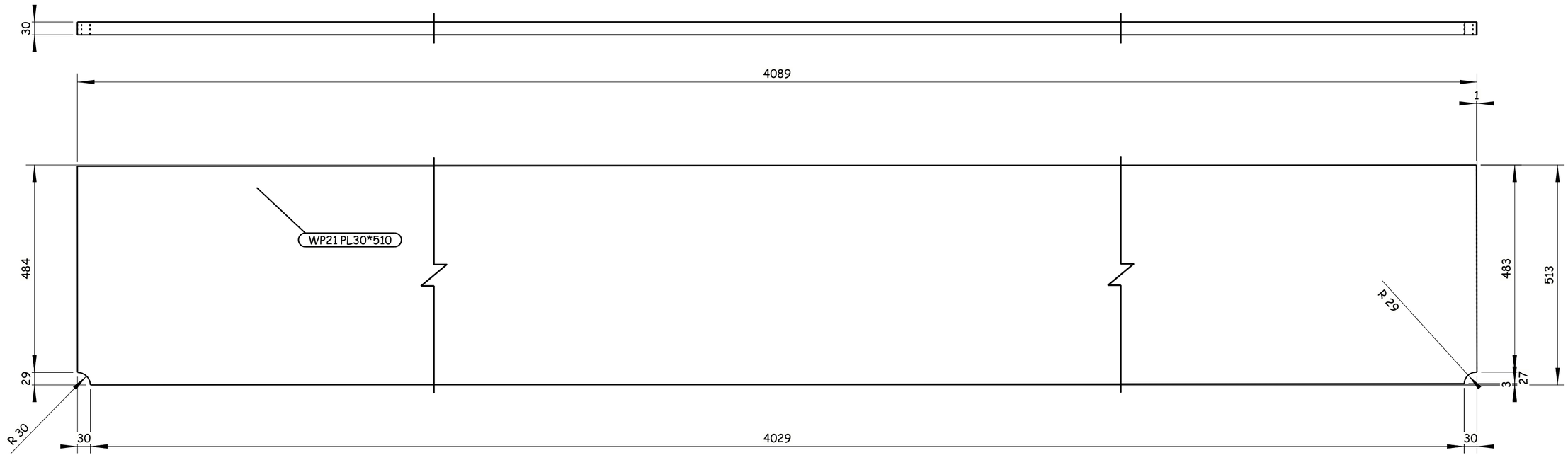

2 REQUIRED AS DRAWN E.SH WP21

GENERAL NOTES:

1. ALL DIMENSIONS ARE IN MILLIMETERS UNLESS OTHERWISE SPECIFIED.
2. LEVELS ARE IN METERS
3. DESIGN SERVICE LIFE OF 100 YEARS.
4. FLANGES OF TOP AND BOTTOM CHORDS TO BE SUPPLIED WITH IMPROVED THROUGH THICKNESS PROPERTIES Z25 ACCORDING TO EN10164.

REFERENCE DRAWINGS

1	93M-0407-SEN-6OL11-END-10118-B PAGE 01:17
2	
3	
4	
5	
6	
7	
8	
9	
10	
11	

6TH OF OCTOBER CITY RAIL TRANSIT MONORAIL &
NEW CAPITAL CITY RAIL TRANSIT MONORAIL

The Authority — Hill International — Authority Consultant
ORASCOM CONSTRUCTION — Main Contractor
BOMBARDIER — SENER — SHAKER CONSULTANCY GROUP — Designer

CONTRACTOR:
CONSULTANT:
ENGINEERING HOUSE FOR CONSULTANCY

SCALE	SHOP DRAWING	DATE
AS SHOWN		20.11.2024

REV	DATE	BY	DESCRIPTION	CHK	APD
A	20-11-24	E.SH	ISSUE FOR APPROVAL	A.SH	M.M

6 October Monorail
Engineering Unit
Valid For Construction

DRAWING TITLE:
6TH OF OCTOBER MONORAIL
SHOP DRAWING FOR BRIDGE 6OL11-37
STEEL TRUSS (II).
WP21

Project Code	Rubric	Initiator	Lot	Ref	Number	Revision
93M	0407	AAC	60L11	DWG	90404	A

Tekla structures

-Drawing shall be updated according to the comments on the GA drawing.
-Approval is subjected to the approval of coordination package between multi-discipline.

REVIEWED WITH COMMENT
MONORAILS PROJECT

All holes are 22mm U.N.O Length & Area & Weight per piece

Mark	Profile	Grade	QTY	Length	Area	Weight
WP22	PL20*520	S355J2N	2	3326.8	3.61	271.1

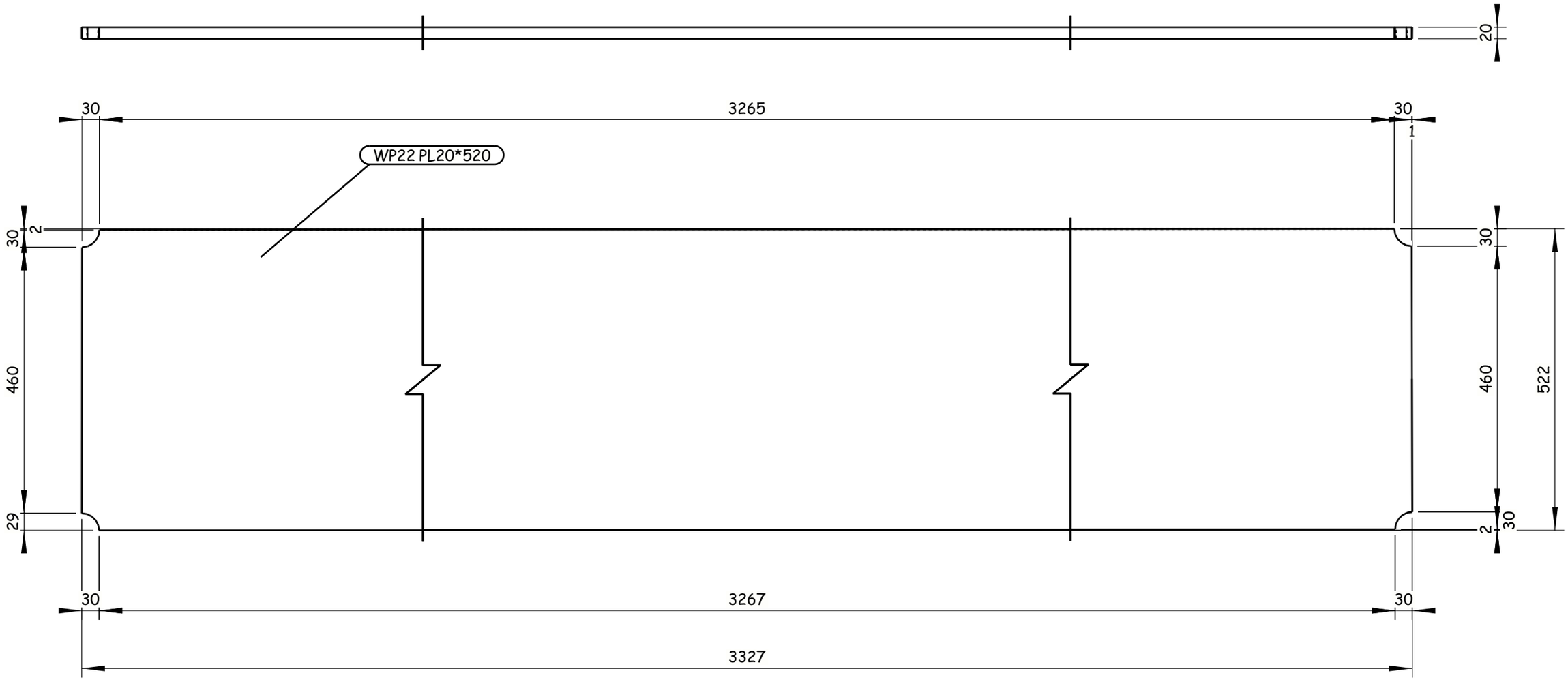

2 REQUIRED AS DRAWN E.SH WP22

6 October Monorail
Engineering Unit
Valid For Construction

GENERAL NOTES:

1. ALL DIMENSIONS ARE IN MILLIMETERS UNLESS OTHERWISE SPECIFIED.
2. LEVELS ARE IN METERS
3. DESIGN SERVICE LIFE OF 100 YEARS.
4. FLANGES OF TOP AND BOTTOM CHORDS TO BE SUPPLIED WITH IMPROVED THROUGH THICKNESS PROPERTIES Z25 ACCORDING TO EN10164.

REFERENCE DRAWINGS

1	93M-0407-SEN-6OL11-END-10118-B PAGE 01:17
2	
3	
4	
5	
6	
7	
8	
9	
10	
11	

6TH OF OCTOBER CITY RAIL TRANSIT MONORAIL &
NEW CAPITAL CITY RAIL TRANSIT MONORAIL

The Authority
Hill International
Authority Consultant

ORASCOM CONSTRUCTION
BOMBARDIER
Main Contractor

SENER
SHAKER CONSULTANCY GROUP
Designer

CONTRACTOR / CONSULTANT:
ENGINEERING HOUSE FOR CONSULTANCY

SCALE: AS SHOWN | CHD DRAWING | DATE: 20.11.2024

REV	DATE	BY	DESCRIPTION	CHK	APD
A	20-11-24	E.SH	ISSUE FOR APPROVAL	A.SH	M.M

DRAWING TITLE:
6TH OF OCTOBER MONORAIL
SHOP DRAWING FOR BRIDGE 6OL11-37
STEEL TRUSS (II).
WP22

Project Code	Rubric	Initiator	Lot	Ref	Number	Revision
93M	0407	AAC	6OL11	DWG	90405	A

Tekla structures

-Drawing shall be updated according to the comments on the GA drawing.
-Approval is subjected to the approval of coordination package between multi-discipline.

REVIEWED WITH COMMENT
MONORAILS PROJECT

All holes are 22mm U.N.O Length & Area & Weight per piece

Mark	Profile	Grade	QTY	Length	Area	Weight
WP23	PL12*360	S355J2N	4	2144.7	1.60	72.6

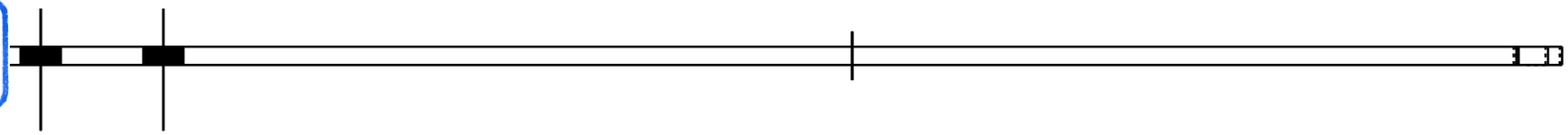

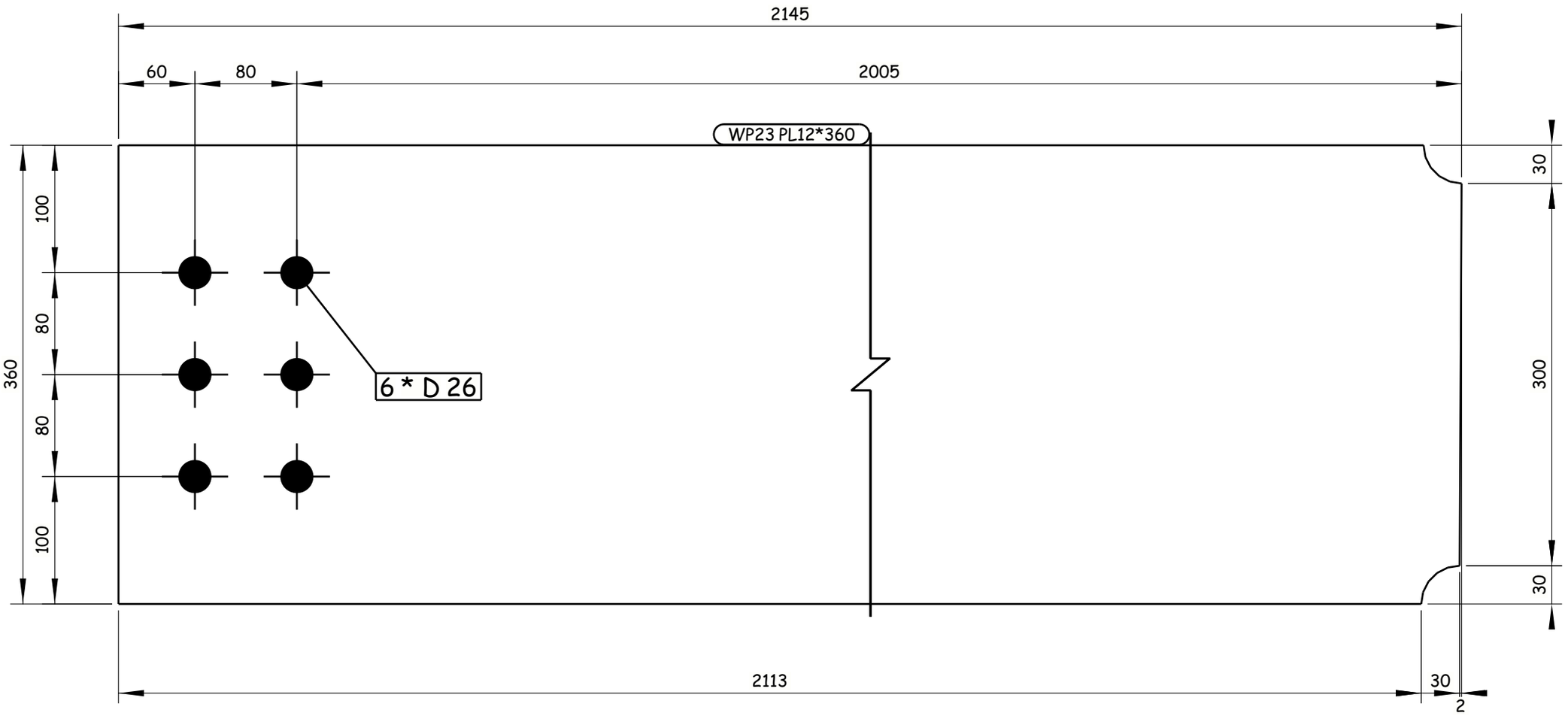

4 REQUIRED AS DRAWN E.SH WP23

6 October Monorail
Engineering Unit
Valid For Construction

GENERAL NOTES:

1. ALL DIMENSIONS ARE IN MILLIMETERS UNLESS OTHERWISE SPECIFIED.
2. LEVELS ARE IN METERS
3. DESIGN SERVICE LIFE OF 100 YEARS.
4. FLANGES OF TOP AND BOTTOM CHORDS TO BE SUPPLIED WITH IMPROVED THROUGH THICKNESS PROPERTIES Z25 ACCORDING TO EN10164.

REFERENCE DRAWINGS

1	93M-0407-SEN-6OL11-END-10118-B PAGE 01:17
2	
3	
4	
5	
6	
7	
8	
9	
10	
11	

6TH OF OCTOBER CITY RAIL TRANSIT MONORAIL &
NEW CAPITAL CITY RAIL TRANSIT MONORAIL

The Authority — Hill International Authority Consultant — Main Contractor — Designer

CONTRACTOR & CONSULTANT:
ENGINEERING HOUSE FOR CONSULTANCY

SCALE: AS SHOWN | SHOP DRAWING | DATE: 20.11.2024

DRAWING TITLE:
6TH OF OCTOBER MONORAIL
SHOP DRAWING FOR BRIDGE 6OL11-37
STEEL TRUSS (II).
WP23

REV	DATE	BY	DESCRIPTION	CHK	APD
A	20-11-24	E.SH	ISSUE FOR APPROVAL	A.SH	M.M

Project Code	Rubric	Initiator	Lot	Ref	Number	Revision
93M	0407	AAC	60L11	DWG	90406	A

Tekla structures

-Drawing shall be updated according to the comments on the GA drawing.
-Approval is subjected to the approval of coordination package between multi-discipline.

REVIEWED WITH COMMENT
MONORAILS PROJECT

All holes are 22mm U.N.O Length & Area & Weight per piece

Mark	Profile	Grade	QTY	Length	Area	Weight
WP24	PL12*360	S355J2N	2	2600.1	1.94	87.9

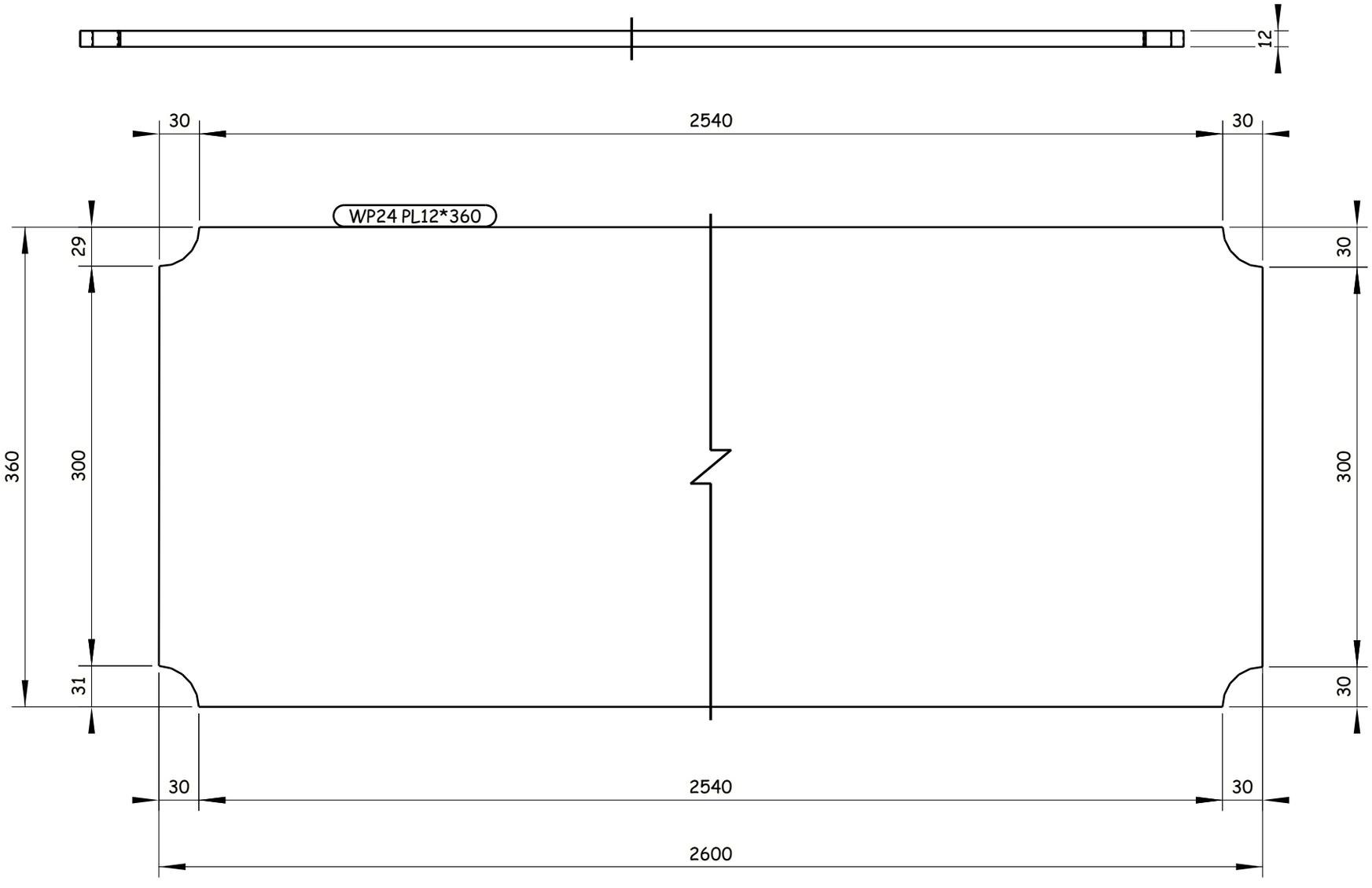

2 REQUIRED AS DRAWN E.SH WP24

GENERAL NOTES:

1. ALL DIMENSIONS ARE IN MILLIMETERS UNLESS OTHERWISE SPECIFIED.
2. LEVELS ARE IN METERS
3. DESIGN SERVICE LIFE OF 100 YEARS.
4. FLANGES OF TOP AND BOTTOM CHORDS TO BE SUPPLIED WITH IMPROVED THROUGH THICKNESS PROPERTIES Z25 ACCORDING TO EN10164.

REFERENCE DRAWINGS

1	93M-0407-SEN-6OL11-END-10118-B PAGE 01:17
2	
3	
4	
5	
6	
7	
8	
9	
10	
11	

6TH OF OCTOBER CITY RAIL TRANSIT MONORAIL &
NEW CAPITAL CITY RAIL TRANSIT MONORAIL

The Authority
Hill International
Authority Consultant

Main Contractor

Designer

CONTRACTOR & CONSULTANT:
ENGINEERING HOUSE FOR CONSULTANCY

SCALE: AS SHOWN | CHK'D DRAWING | DATE: 20.11.2024

REV	DATE	BY	DESCRIPTION	CHK	APD
A	20-11-24	E.SH	ISSUE FOR APPROVAL	A.SH	M.M

6 October Monorail
Engineering Unit
Valid For Construction

DRAWING TITLE:
6TH OF OCTOBER MONORAIL
SHOP DRAWING FOR BRIDGE 6OL11-37
STEEL TRUSS (II).
WP24

Project Code	Rubric	Initiator	Lot	Ref	Number	Revision
93M	0407	AAC	60L11	DWG	90407	A

Tekla structures

-Drawing shall be updated according to the comments on the GA drawing.
-Approval is subjected to the approval of coordination package between multi-discipline.

REVIEWED WITH COMMENT
MONORAILS PROJECT

All holes are 22mm U.N.O Length & Area & Weight per piece

Mark	Profile	Grade	QTY	Length	Area	Weight
WP25	PL20*550	S355J2N	2	3287.2	3.76	283.3

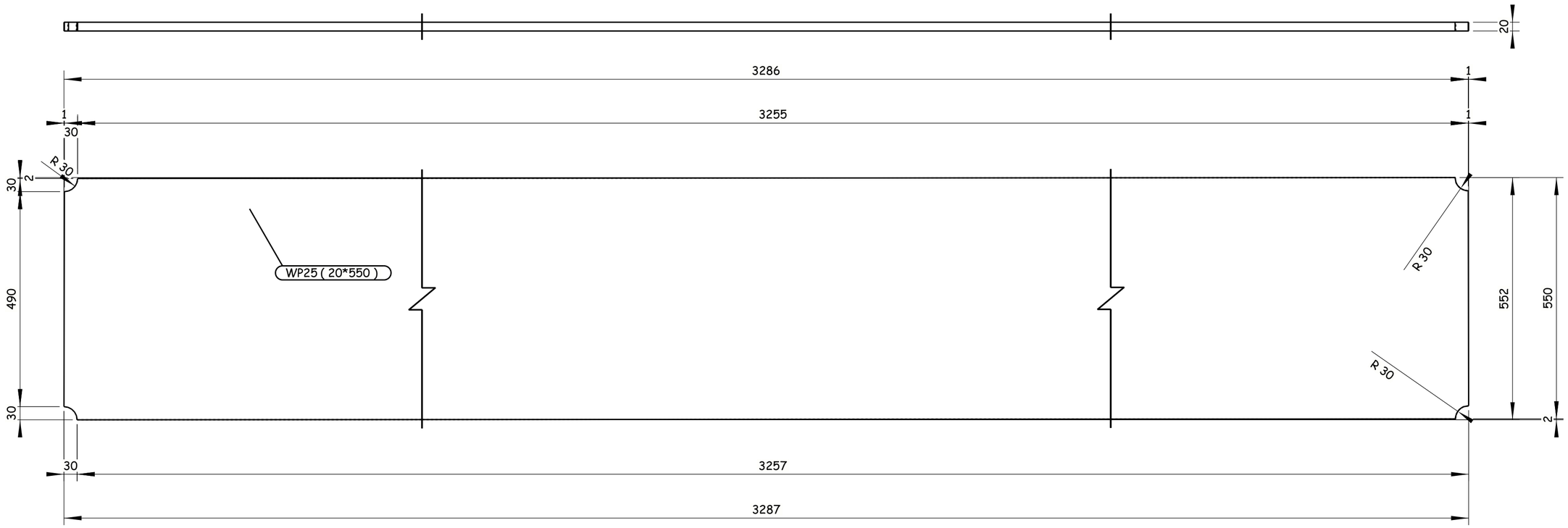

2 REQUIRED AS DRAWN E.SH WP25

GENERAL NOTES:

1. ALL DIMENSIONS ARE IN MILLIMETERS UNLESS OTHERWISE SPECIFIED.
2. LEVELS ARE IN METERS
3. DESIGN SERVICE LIFE OF 100 YEARS.
4. FLANGES OF TOP AND BOTTOM CHORDS TO BE SUPPLIED WITH IMPROVED THROUGH THICKNESS PROPERTIES Z25 ACCORDING TO EN10164.

REFERENCE DRAWINGS

1	93M-0407-SEN-6OL11-END-10118-B PAGE 01:17
2	
3	
4	
5	
6	
7	
8	
9	
10	
11	

6TH OF OCTOBER CITY RAIL TRANSIT MONORAIL &
NEW CAPITAL CITY RAIL TRANSIT MONORAIL

The Authority
Hill International
Authority Consultant

ORASCOM CONSTRUCTION
Main Contractor

BOMBARDIER
SENER
SHAKER CONSULTANCY GROUP
Designer

CONTRACTOR:
CONSULTANT:
ENGINEERING HOUSE FOR CONSULTANCY

SCALE	SHOP DRAWING	DATE
AS SHOWN		20.11.2024

REV	DATE	BY	DESCRIPTION	CHK	APD
A	20-11-24	E.SH	ISSUE FOR APPROVAL	A.SH	M.M

6 October Monorail
Engineering Unit
Valid For Construction

DRAWING TITLE:
6TH OF OCTOBER MONORAIL
SHOP DRAWING FOR BRIDGE 6OL11-37
STEEL TRUSS (II).
WP25

Project Code	Rubric	Initiator	Lot	Ref	Number	Revision
9 3 M	0 4 0 7	A A C	6 0 L 1 1	D W G	90408	A

Tekla structures

-Drawing shall be updated according to the comments on the GA drawing.
-Approval is subjected to the approval of coordination package between multi-discipline.

REVIEWED WITH COMMENT
MONORAILS PROJECT

All holes are 22mm U.N.O Length & Area & Weight per piece

Mark	Profile	Grade	QTY	Length	Area	Weight
WP26	PL30*510	S355J2N	2	2039.5	2.23	244.8

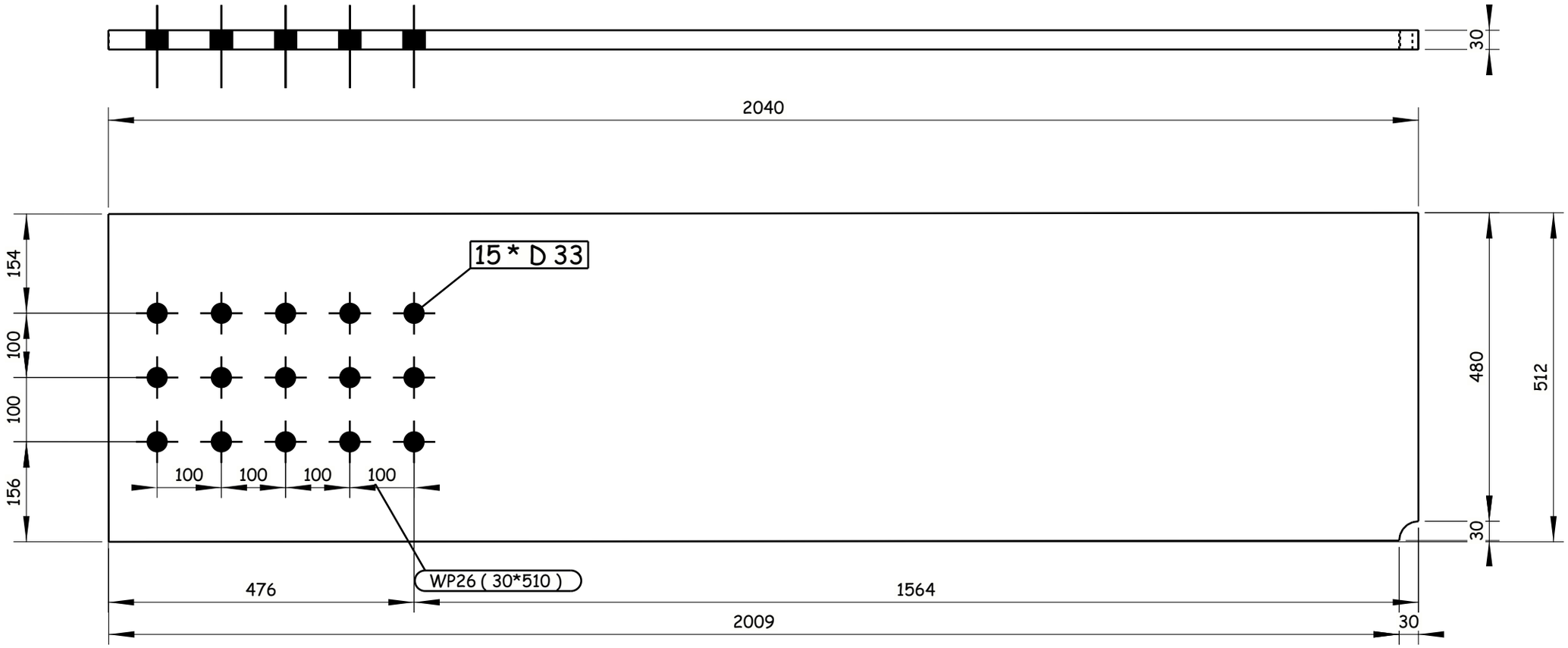

2 REQUIRED AS DRAWN E.SH WP26

6 October Monorail
Engineering Unit
Valid For Construction

Tekla structures

GENERAL NOTES:

1. ALL DIMENSIONS ARE IN MILLIMETERS UNLESS OTHERWISE SPECIFIED.
2. LEVELS ARE IN METERS
3. DESIGN SERVICE LIFE OF 100 YEARS.
4. FLANGES OF TOP AND BOTTOM CHORDS TO BE SUPPLIED WITH IMPROVED THROUGH THICKNESS PROPERTIES Z25 ACCORDING TO EN10164.

REFERENCE DRAWINGS

1	93M-0407-SEN-6OL11-END-10118-B PAGE 01:17
2	
3	
4	
5	
6	
7	
8	
9	
10	
11	

6TH OF OCTOBER CITY RAIL TRANSIT MONORAIL &
NEW CAPITAL CITY RAIL TRANSIT MONORAIL

The Authority
Hill International
Authority Consultant

ORASCOM CONSTRUCTION
BOMBARDIER
Main Contractor

SENER
SHAKER CONSULTANCY GROUP
Designer

CONTRACTOR & CONSULTANT:
ENGINEERING HOUSE FOR CONSULTANCY

SCALE: AS SHOWN
CHK'D DRAWING
DATE: 20.11.2024

DRAWING TITLE:
6TH OF OCTOBER MONORAIL
SHOP DRAWING FOR BRIDGE 6OL11-37
STEEL TRUSS (II).
WP26

REV	DATE	BY	DESCRIPTION	CHK	APD
A	20-11-24	E.SH	ISSUE FOR APPROVAL	A.SH	M.M

Project Code	Rubric	Initiator	Lot	Ref	Number	Revision
93M	0407	AAC	60L11	DWG	90409	A

-Drawing shall be updated according to the comments on the GA drawing.
-Approval is subjected to the approval of coordination package between multi-discipline.

REVIEWED WITH COMMENT
MONORAILS PROJECT

All holes are 22mm U.N.O Length & Area & Weight per piece

Mark	Profile	Grade	QTY	Length	Area	Weight
WP27	PL15*330	S355J2N	2	2063.0	1.42	79.6

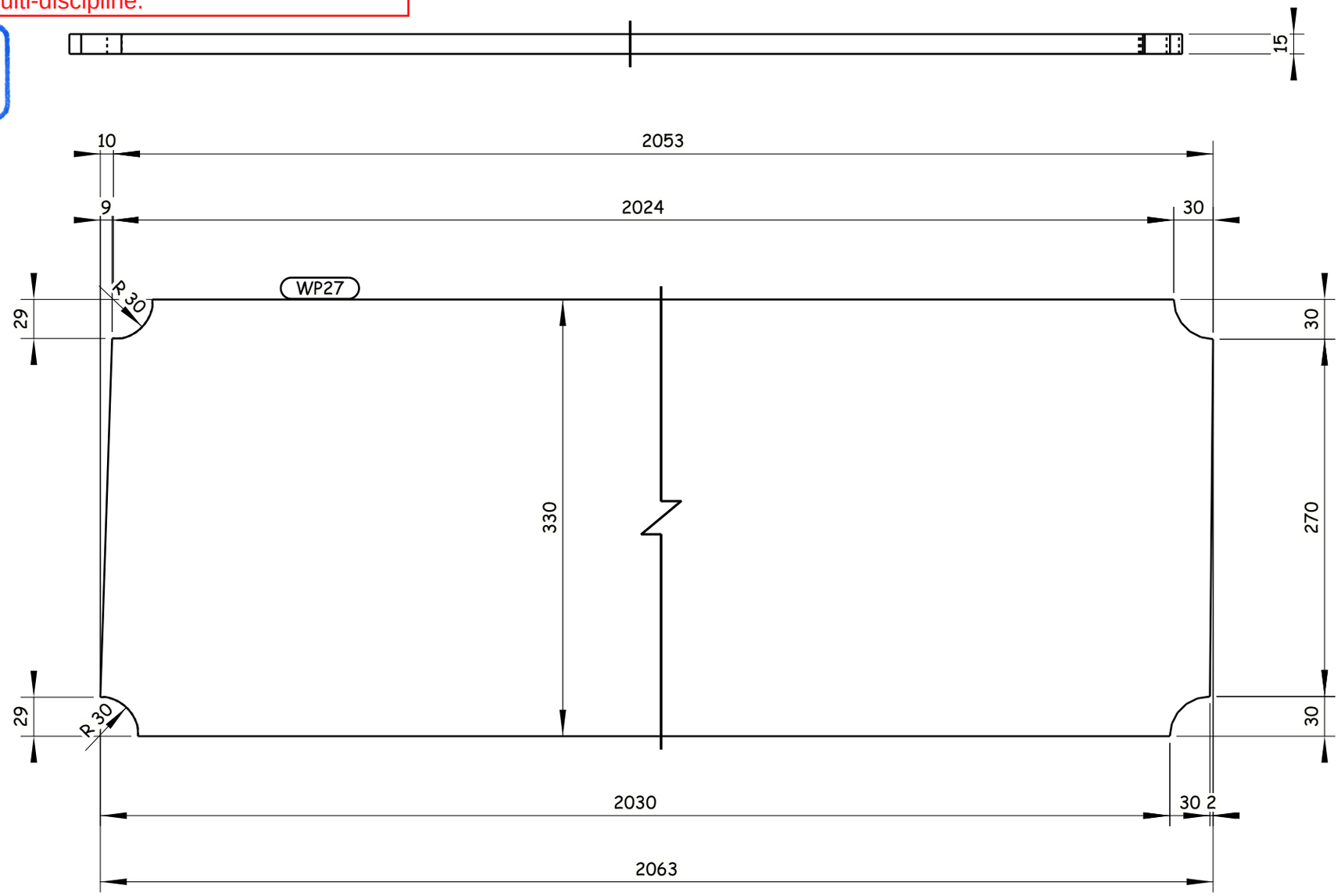

2 REQUIRED AS DRAWN E.SH WP27

6 October Monorail
Engineering Unit
Valid For Construction

GENERAL NOTES:

1. ALL DIMENSIONS ARE IN MILLIMETERS UNLESS OTHERWISE SPECIFIED.
2. LEVELS ARE IN METERS
3. DESIGN SERVICE LIFE OF 100 YEARS.
4. FLANGES OF TOP AND BOTTOM CHORDS TO BE SUPPLIED WITH IMPROVED THROUGH THICKNESS PROPERTIES Z25 ACCORDING TO EN10164.

REFERENCE DRAWINGS

1	93M-0407-SEN-6OL11-END-10118-B PAGE 01:17
2	
3	
4	
5	
6	
7	
8	
9	
10	
11	

6TH OF OCTOBER CITY RAIL TRANSIT MONORAIL &
NEW CAPITAL CITY RAIL TRANSIT MONORAIL

The Authority — Hill International — Authority Consultant
Main Contractor
Designer

CONTRACTOR / CONSULTANT:
ENGINEERING HOUSE FOR CONSULTANCY

SCALE: AS SHOWN | SHOP DRAWING | DATE: 20.11.2024

REV	DATE	BY	DESCRIPTION	CHK	APD
A	20-11-24	E.SH	ISSUE FOR APPROVAL	A.SH	M.M

DRAWING TITLE:
6TH OF OCTOBER MONORAIL
SHOP DRAWING FOR BRIDGE 6OL11-37
STEEL TRUSS (II).
WP27

Project Code	Rubric	Initiator	Lot	Ref	Number	Revision
93M	0407	AAC	60L11	DWG	90410	A

Tekla structures

-Drawing shall be updated according to the comments on the GA drawing.
-Approval is subjected to the approval of coordination package between multi-discipline.

REVIEWED WITH COMMENT
MONORAILS PROJECT

All holes are 22mm U.N.O Length & Area & Weight per piece

Mark	Profile	Grade	QTY	Length	Area	Weight
WP28	PL20*550	S355J2N	2	3286.5	3.76	283.3

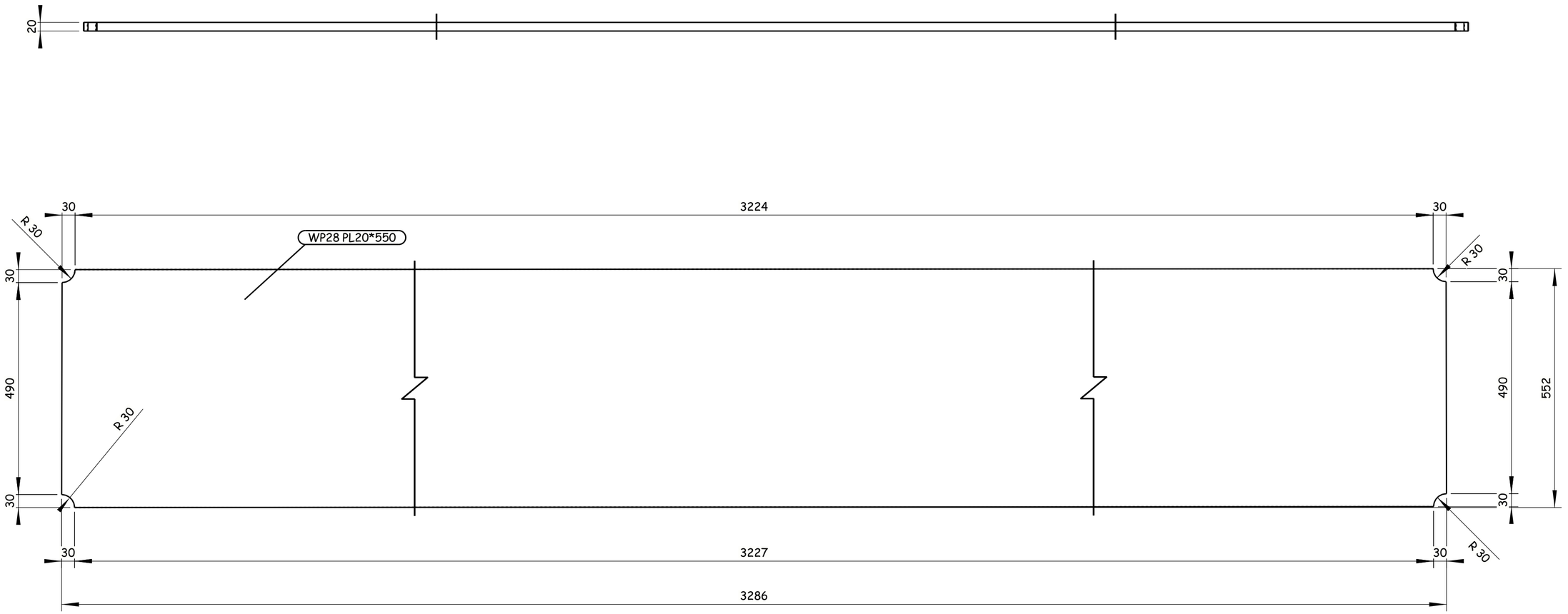

2 REQUIRED AS DRAWN E.SH WP28

GENERAL NOTES:

1. ALL DIMENSIONS ARE IN MILLIMETERS UNLESS OTHERWISE SPECIFIED.
2. LEVELS ARE IN METERS
3. DESIGN SERVICE LIFE OF 100 YEARS.
4. FLANGES OF TOP AND BOTTOM CHORDS TO BE SUPPLIED WITH IMPROVED THROUGH THICKNESS PROPERTIES Z25 ACCORDING TO EN10164.

REFERENCE DRAWINGS

1	93M-0407-SEN-6OL11-END-10118-B PAGE 01:17
2	
3	
4	
5	
6	
7	
8	
9	
10	
11	

6TH OF OCTOBER CITY RAIL TRANSIT MONORAIL &
NEW CAPITAL CITY RAIL TRANSIT MONORAIL

The Authority
Hill International
Authority Consultant
Main Contractor
Designer

CONTRACTOR
CONSULTANT
ENGINEERING HOUSE FOR CONSULTANCY

SCALE: AS SHOWN
SHOP DRAWING
DATE: 20.11.2024

6 October Monorail
Engineering Unit
Valid For Construction

REV	DATE	BY	DESCRIPTION	CHK	APD
A	20-11-24	E.SH	ISSUE FOR APPROVAL	A.SH	M.M

DRAWING TITLE:
6TH OF OCTOBER MONORAIL
SHOP DRAWING FOR BRIDGE 6OL11-37
STEEL TRUSS (II).
WP28

Project Code	Rubric	Initiator	Lot	Ref	Number	Revision
9 3	M 0 4 0 7	A A C	6 0 L 1 1	D W G	90411	A

Tekla structures

-Drawing shall be updated according to the comments on the GA drawing.
-Approval is subjected to the approval of coordination package between multi-discipline.

REVIEWED WITH COMMENT
MONORAILS PROJECT

All holes are 22mm U.N.O Length & Area & Weight per piece

Mark	Profile	Grade	QTY	Length	Area	Weight
WP29	PL30*510	S355J2N	1	2038.1	2.23	244.6

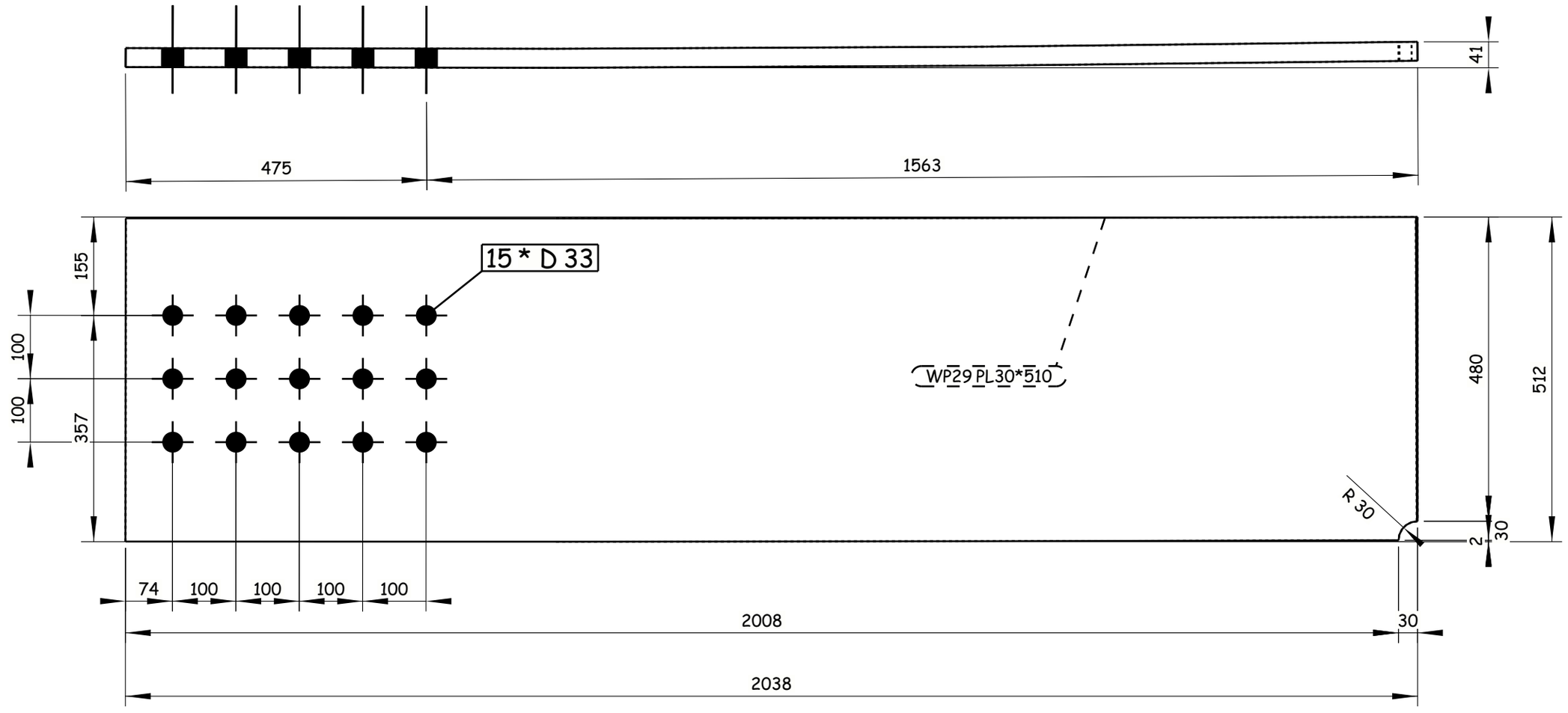

1 REQUIRED AS DRAWN E.SH WP29

Tekla structures

GENERAL NOTES:

1. ALL DIMENSIONS ARE IN MILLIMETERS UNLESS OTHERWISE SPECIFIED.
2. LEVELS ARE IN METERS
3. DESIGN SERVICE LIFE OF 100 YEARS.
4. FLANGES OF TOP AND BOTTOM CHORDS TO BE SUPPLIED WITH IMPROVED THROUGH THICKNESS PROPERTIES Z25 ACCORDING TO EN10164.

REFERENCE DRAWINGS

1	93M-0407-SEN-6OL11-END-10118-B PAGE 01:17
2	
3	
4	
5	
6	
7	
8	
9	
10	
11	

6TH OF OCTOBER CITY RAIL TRANSIT MONORAIL &
NEW CAPITAL CITY RAIL TRANSIT MONORAIL

The Authority — Hill International — Authority Consultant
ORASCOM CONSTRUCTION — BOMBARDIER — Main Contractor
SENER — SHAKER CONSULTANCY GROUP — Designer

CONTRACTOR & CONSULTANT:
ENGINEERING HOUSE FOR CONSULTANCY

6 October Monorail
Engineering Unit
Valid For Construction

SCALE	SHOP DRAWING	DATE
AS SHOWN		20.11.2024

REV	DATE	BY	DESCRIPTION	CHK	APD
A	20-11-24	E.SH	ISSUE FOR APPROVAL	A.SH	M.M

DRAWING TITLE:
6TH OF OCTOBER MONORAIL
SHOP DRAWING FOR BRIDGE 6OL11-37
STEEL TRUSS (II).
WP29

Project Code	Rubric	Initiator	Lot	Ref	Number	Revision
9 3 M	0 4 0 7	A A C	6 0 L 1 1	D W G	90412	A

-Drawing shall be updated according to the comments on the GA drawing.
-Approval is subjected to the approval of coordination package between multi-discipline.

REVIEWED WITH COMMENT
MONORAILS PROJECT

All holes are 22mm U.N.O Length & Area & Weight per piece

Mark	Profile	Grade	QTY	Length	Area	Weight
WP30	PL30*510	S355J2N	1	2039.5	2.23	244.8

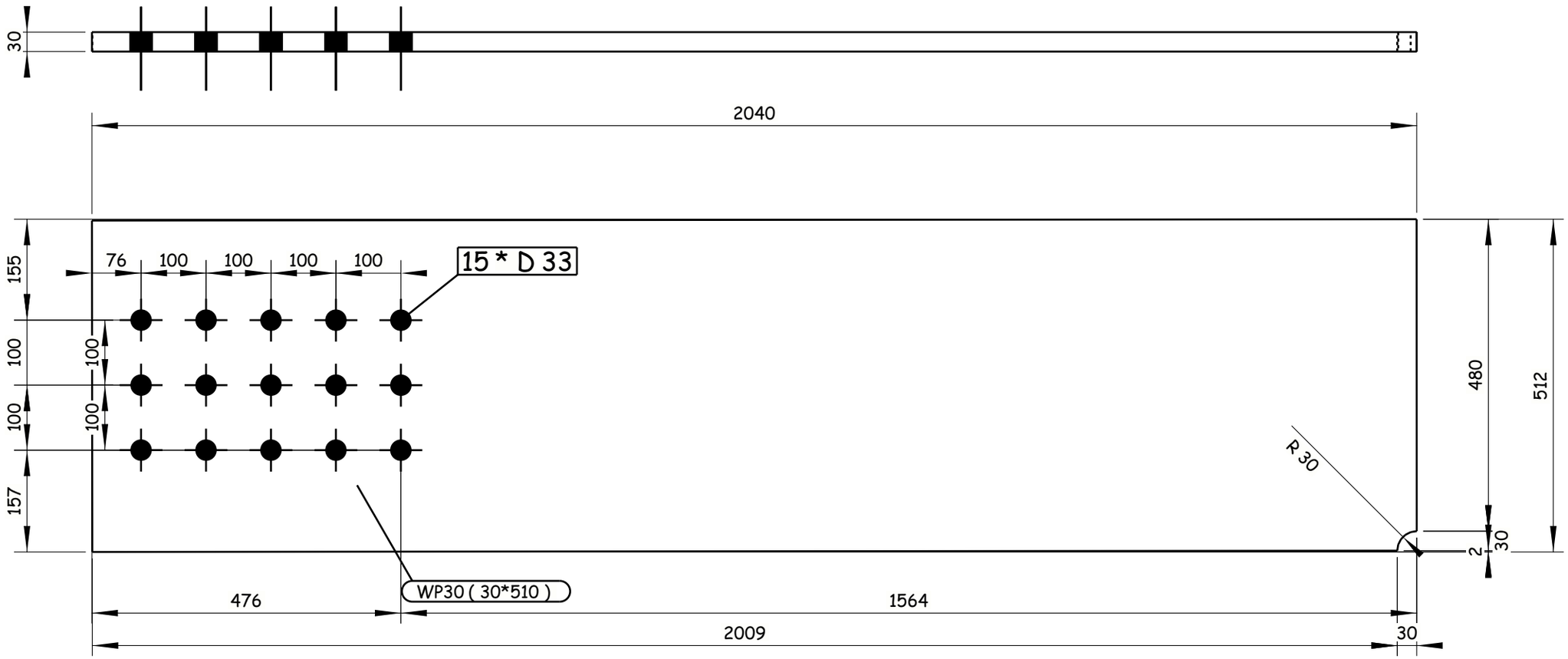

1 REQUIRED AS DRAWN E.SH WP30

Tekla structures

GENERAL NOTES:

1. ALL DIMENSIONS ARE IN MILLIMETERS UNLESS OTHERWISE SPECIFIED.
2. LEVELS ARE IN METERS
3. DESIGN SERVICE LIFE OF 100 YEARS.
4. FLANGES OF TOP AND BOTTOM CHORDS TO BE SUPPLIED WITH IMPROVED THROUGH THICKNESS PROPERTIES Z25 ACCORDING TO EN10164.

REFERENCE DRAWINGS

1	93M-0407-SEN-6OL11-END-10118-B PAGE 01:17
2	
3	
4	
5	
6	
7	
8	
9	
10	
11	

6TH OF OCTOBER CITY RAIL TRANSIT MONORAIL &
NEW CAPITAL CITY RAIL TRANSIT MONORAIL

The Authority / Hill International Authority Consultant

Main Contractor

Designer

CONTRACTOR CONSULTANT: ENGINEERING HOUSE FOR CONSULTANCY

SCALE: AS SHOWN | CHD DRAWING | DATE: 20.11.2024

REV	DATE	BY	DESCRIPTION	CHK	APD
A	20-11-24	E.SH	ISSUE FOR APPROVAL	A.SH	M.M

6 October Monorail
Engineering Unit
Valid For Construction

DRAWING TITLE:
6TH OF OCTOBER MONORAIL
SHOP DRAWING FOR BRIDGE 6OL11-37
STEEL TRUSS (II).
WP30

Project Code	Rubric	Initiator	Lot	Ref	Number	Revision
93M	407	AAC	60L11	DWG	90413	A

-Drawing shall be updated according to the comments on the GA drawing.
-Approval is subjected to the approval of coordination package between multi-discipline.

REVIEWED WITH COMMENT
MONORAILS PROJECT

All holes are 22mm U.N.O Length & Area & Weight per piece						
WP31	PL15*330	S355J2N	2	2062.6	1.42	79.6
Mark	Profile	Grade	QTY	Length	Area	Weight

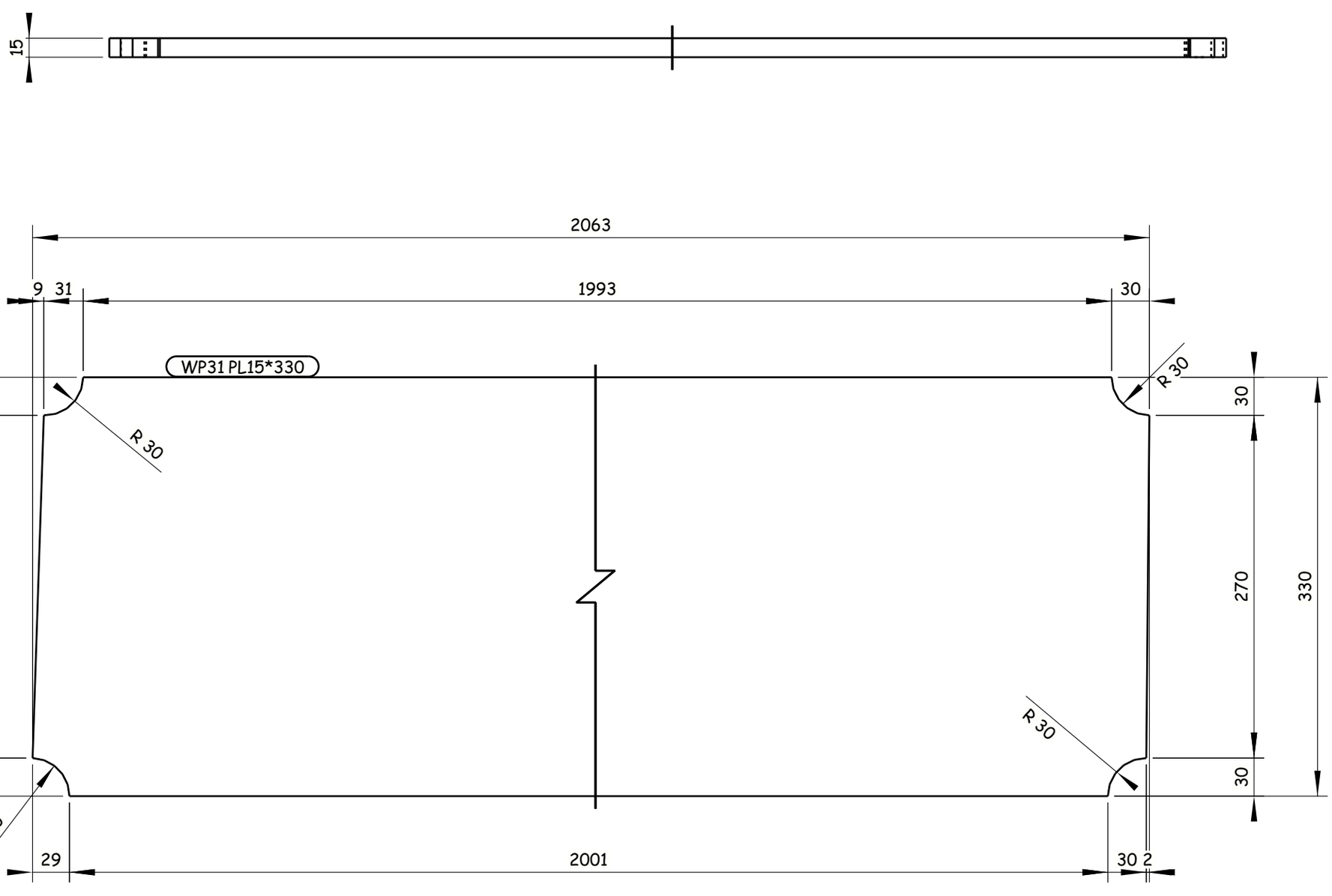

2 REQUIRED AS DRAWN E.SH WP31

Tekla structures

GENERAL NOTES:

1. ALL DIMENSIONS ARE IN MILLIMETERS UNLESS OTHERWISE SPECIFIED.
2. LEVELS ARE IN METERS
3. DESIGN SERVICE LIFE OF 100 YEARS.
4. FLANGES OF TOP AND BOTTOM CHORDS TO BE SUPPLIED WITH IMPROVED THROUGH THICKNESS PROPERTIES Z25 ACCORDING TO EN10164.

REFERENCE DRAWINGS

1	93M-0407-SEN-6OL11-END-10118-B PAGE 01:17
2	
3	
4	
5	
6	
7	
8	
9	
10	
11	

6TH OF OCTOBER CITY RAIL TRANSIT MONORAIL &
NEW CAPITAL CITY RAIL TRANSIT MONORAIL

The Authority
Hill International
Authority Consultant

Main Contractor

Designer

CONTRACTOR / CONSULTANT:
ENGINEERING HOUSE FOR CONSULTANCY

SCALE: AS SHOWN | CHK'D DRAWING | DATE: 20.11.2024

REV	DATE	BY	DESCRIPTION	CHK	APD
A	20-11-24	E.SH	ISSUE FOR APPROVAL	A.SH	M.M

6 October: Monorail
Engineering Unit
Valid For Construction

DRAWING TITLE:
6TH OF OCTOBER MONORAIL
SHOP DRAWING FOR BRIDGE 6OL11-37
STEEL TRUSS (II).
WP31

Project Code	Rubric	Initiator	Lot	Ref	Number	Revision
9 3 M	0 4 0 7	A A C	6 0 L 1 1	D W G	90414	A

-Drawing shall be updated according to the comments on the GA drawing.
-Approval is subjected to the approval of coordination package between multi-discipline.

REVIEWED WITH COMMENT
MONORAILS PROJECT

All holes are 22mm U.N.O Length & Area & Weight per piece

Mark	Profile	Grade	QTY	Length	Area	Weight
WP32	PL12*360	S355J2N	1	2599.8	1.94	87.9

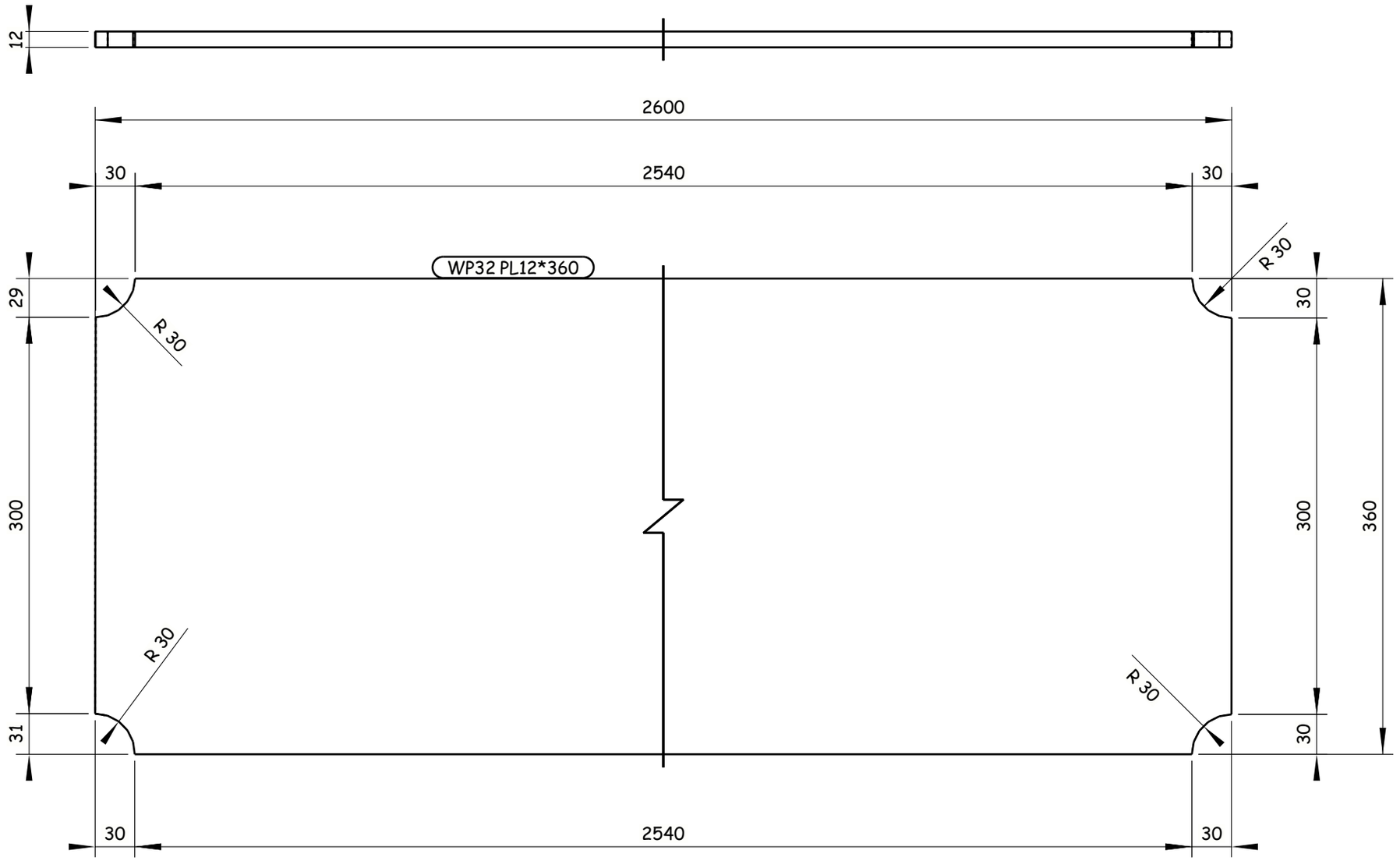

1 REQUIRED AS DRAWN E.SH WP32

GENERAL NOTES:

1. ALL DIMENSIONS ARE IN MILLIMETERS UNLESS OTHERWISE SPECIFIED.
2. LEVELS ARE IN METERS
3. DESIGN SERVICE LIFE OF 100 YEARS.
4. FLANGES OF TOP AND BOTTOM CHORDS TO BE SUPPLIED WITH IMPROVED THROUGH THICKNESS PROPERTIES Z25 ACCORDING TO EN10164.

REFERENCE DRAWINGS

1	93M-0407-SEN-6OL11-END-10118-B PAGE 01:17
2	
3	
4	
5	
6	
7	
8	
9	
10	
11	

6TH OF OCTOBER CITY RAIL TRANSIT MONORAIL &
NEW CAPITAL CITY RAIL TRANSIT MONORAIL

The Authority
Hill International
Authority Consultant

ORASCOM CONSTRUCTION
Main Contractor

BOMBARDIER
SENER
SHAKER CONSULTANCY GROUP
Designer

CONTRACTOR:
CONSULTANT:

ENGINEERING HOUSE FOR CONSULTANCY

6 October Monorail
Engineering Unit
Valid For Construction

REV	DATE	BY	DESCRIPTION	CHK	APD
A	20-11-24	E.SH	ISSUE FOR APPROVAL	A.SH	M.M

SCALE: AS SHOWN | SHOP DRAWING | DATE: 20.11.2024

DRAWING TITLE:
6TH OF OCTOBER MONORAIL
SHOP DRAWING FOR BRIDGE 6OL11-37
STEEL TRUSS (II).
WP32

Project Code	Rubric	Initiator	Lot	Ref	Number	Revision
93M	0407	AAC	60L11	DWG	90415	A

Tekla structures

All holes are 22mm U.N.O Length & Area & Weight per piece

Mark	Profile	Grade	QTY	Length	Area	Weight
XF1	PL15*662.5	S355J2N	16	700.0	0.47	25.5

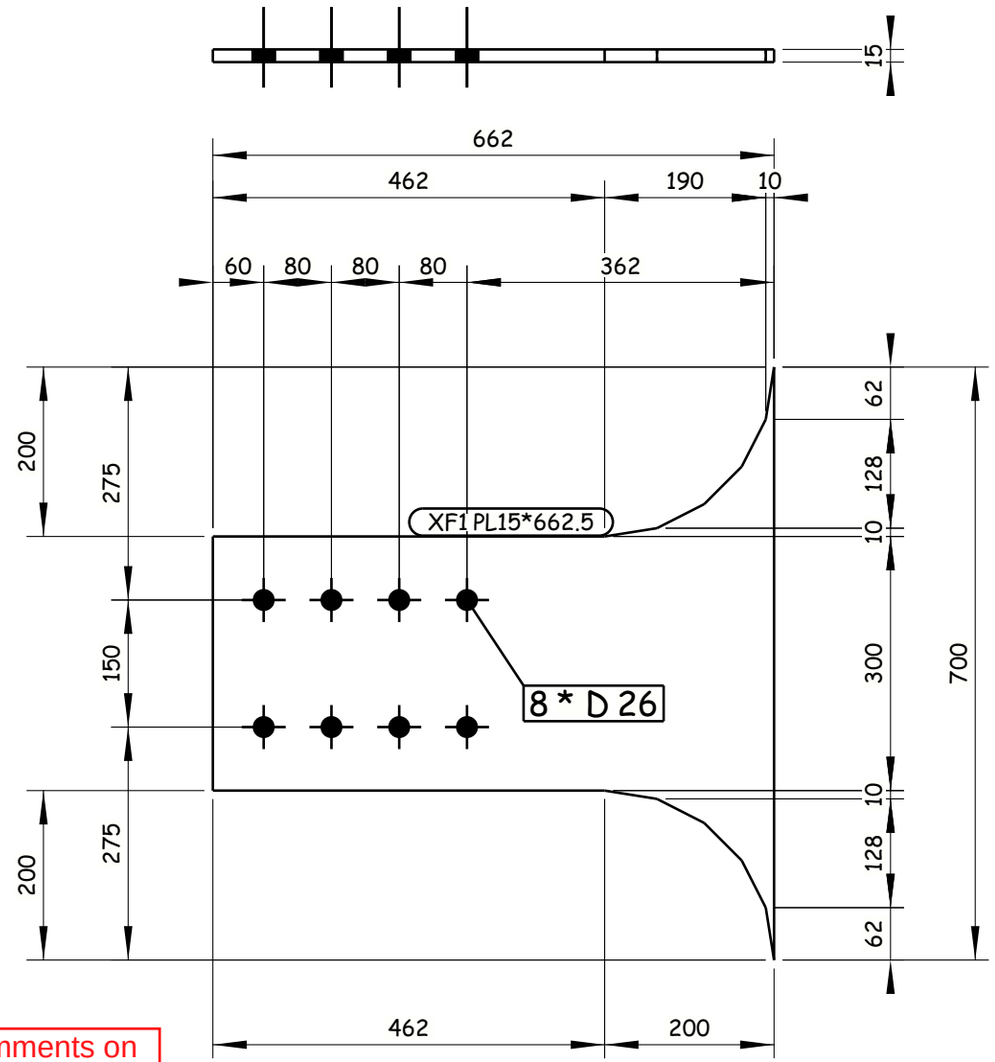

-Drawing shall be updated according to the comments on the GA drawing.
-Approval is subjected to the approval of coordination package between multi-discipline.

REVIEWED WITH COMMENT MONORAILS PROJECT

16 REQUIRED AS DRAWN E.SH XF1

6 October Monorail Engineering Unit Valid For Construction

Tekla structures

GENERAL NOTES:

1. ALL DIMENSIONS ARE IN MILLIMETERS UNLESS OTHERWISE SPECIFIED.
2. LEVELS ARE IN METERS
3. DESIGN SERVICE LIFE OF 100 YEARS.
4. FLANGES OF TOP AND BOTTOM CHORDS TO BE SUPPLIED WITH IMPROVED THROUGH THICKNESS PROPERTIES Z25 ACCORDING TO EN10164.

REFERENCE DRAWINGS

1	93M-0407-SEN-6OL11-END-10118-B PAGE 01:17
2	
3	
4	
5	
6	
7	
8	
9	
10	
11	

6TH OF OCTOBER CITY RAIL TRANSIT MONORAIL & NEW CAPITAL CITY RAIL TRANSIT MONORAIL

The Authority — Hill International Authority Consultant

Main Contractor: ORASCOM CONSTRUCTION, BOMBARDIER

Designer: SENER, SHAKER CONSULTANCY GROUP

CONTRACTOR / CONSULTANT: EHC ENGINEERING HOUSE FOR CONSULTANCY

REV	DATE	BY	DESCRIPTION	CHK	APD
A	20-11-24	E.SH	ISSUE FOR APPROVAL	A.SH	M.M

SCALE: AS SHOWN | CHD DRAWING | DATE: 20.11.2024

DRAWING TITLE:
6TH OF OCTOBER MONORAIL
SHOP DRAWING FOR BRIDGE 6OL11-37
STEEL TRUSS (II).
XF1

Project Code	Rubric	Initiator	Lot	Ref	Number	Revision
93M	0407	AAC	60L11	DWG	90416	A

-Drawing shall be updated according to the comments on the GA drawing.
-Approval is subjected to the approval of coordination package between multi-discipline.

REVIEWED WITH COMMENT
MONORAILS PROJECT

All holes are 22mm U.N.O Length & Area & Weight per piece

Mark	Profile	Grade	QTY	Length	Area	Weight
XF2	PL15*602.5	S355J2N	14	700.0	0.43	23.4

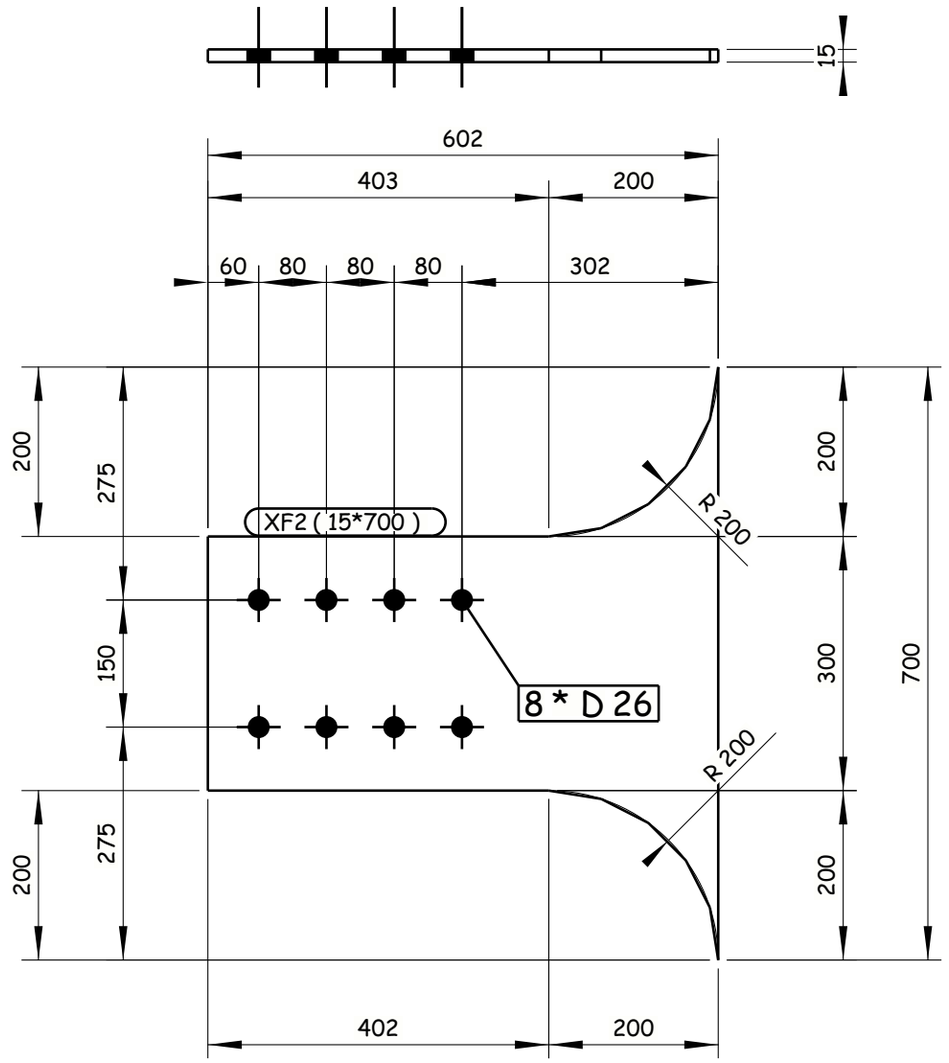

14 REQUIRED AS DRAWN E.SH XF2

GENERAL NOTES:
1. ALL DIMENSIONS ARE IN MILLIMETERS UNLESS OTHERWISE SPECIFIED.
2. LEVELS ARE IN METERS
3. DESIGN SERVICE LIFE OF 100 YEARS.
4. FLANGES OF TOP AND BOTTOM CHORDS TO BE SUPPLIED WITH IMPROVED THROUGH THICKNESS PROPERTIES Z25 ACCORDING TO EN10164.

REFERENCE DRAWINGS

1	93M-0407-SEN-6OL11-END-10118-B PAGE 01:17
2	
3	
4	
5	
6	
7	
8	
9	
10	
11	

6TH OF OCTOBER CITY RAIL TRANSIT MONORAIL &
NEW CAPITAL CITY RAIL TRANSIT MONORAIL

The Authority
Hill International
Authority Consultant

Main Contractor

Designer

CONTRACTOR / CONSULTANT:
ENGINEERING HOUSE FOR CONSULTANCY

6 October Monorail
Engineering Unit
Valid For Construction

SCALE: AS SHOWN | CHD DRAWING | DATE: 20.11.2024

DRAWING TITLE:
6TH OF OCTOBER MONORAIL
SHOP DRAWING FOR BRIDGE 6OL11-37
STEEL TRUSS (II).
XF2

REV	DATE	BY	DESCRIPTION	CHK	APD
A	20-11-24	E.SH	ISSUE FOR APPROVAL	A.SH	M.M

Project Code	Rubric	Initiator	Lot	Ref	Number	Revision
93M	04	07	AAC	60	L11	DWG	90417	A

Tekla structures

-Drawing shall be updated according to the comments on the GA drawing.
-Approval is subjected to the approval of coordination package between multi-discipline.

REVIEWED WITH COMMENT
MONORAILS PROJECT

All holes are 22mm U.N.O Length & Area & Weight per piece

Mark	Profile	Grade	QTY	Length	Area	Weight
XF3	PL15*602.5	S355J2N	14	700.0	0.43	23.4

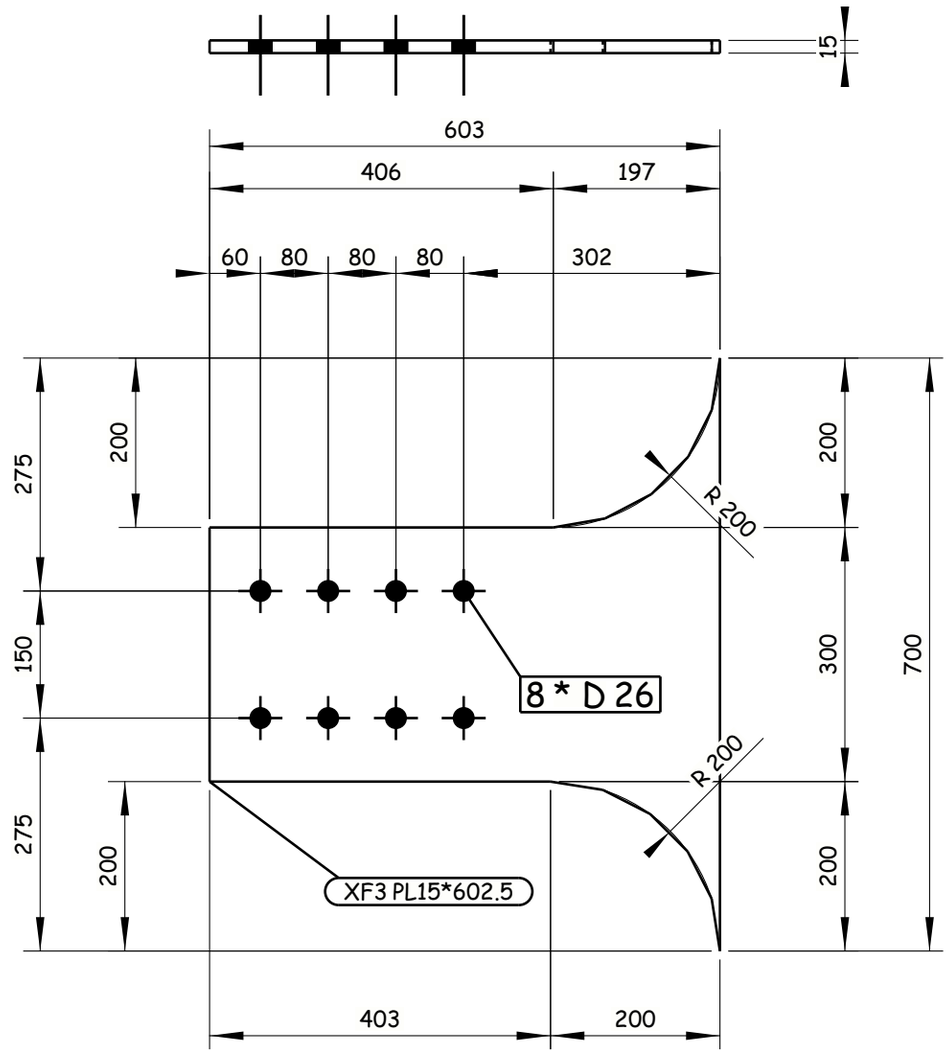

14 REQUIRED AS DRAWN E.SH XF3

GENERAL NOTES:

1. ALL DIMENSIONS ARE IN MILLIMETERS UNLESS OTHERWISE SPECIFIED.
2. LEVELS ARE IN METERS
3. DESIGN SERVICE LIFE OF 100 YEARS.
4. FLANGES OF TOP AND BOTTOM CHORDS TO BE SUPPLIED WITH IMPROVED THROUGH THICKNESS PROPERTIES Z25 ACCORDING TO EN10164.

REFERENCE DRAWINGS

1	93M-0407-SEN-6OL11-END-10118-B PAGE 01:17
2	
3	
4	
5	
6	
7	
8	
9	
10	
11	

6TH OF OCTOBER CITY RAIL TRANSIT MONORAIL &
NEW CAPITAL CITY RAIL TRANSIT MONORAIL

The Authority
Hill International
Authority Consultant

Main Contractor

Designer

CONTRACTOR CONSULTANT :

ENGINEERING HOUSE FOR CONSULTANCY

6 October Monorail
Engineering Unit
Valid For Construction

SCALE	CHD DRAWING	DATE
AS SHOWN		20.11.2024

REV	DATE	BY	DESCRIPTION	CHK	APD
A	20-11-24	E.SH	ISSUE FOR APPROVAL	A.SH	M.M

DRAWING TITLE:
6TH OF OCTOBER MONORAIL
SHOP DRAWING FOR BRIDGE 6OL11-37
STEEL TRUSS (II).
XF3

Project Code	Rubric	Initiator	Lot	Ref	Number	Revision
93M	0407	AAC	60L11	DWG	90418	A

Tekla structures

-Drawing shall be updated according to the comments on the GA drawing.
-Approval is subjected to the approval of coordination package between multi-discipline.

REVIEWED WITH COMMENT
MONORAILS PROJECT

All holes are 22mm U.N.O Length & Area & Weight per piece

Mark	Profile	Grade	QTY	Length	Area	Weight
XF4	PL10*550	S355J2N	8	952.5	1.07	40.9

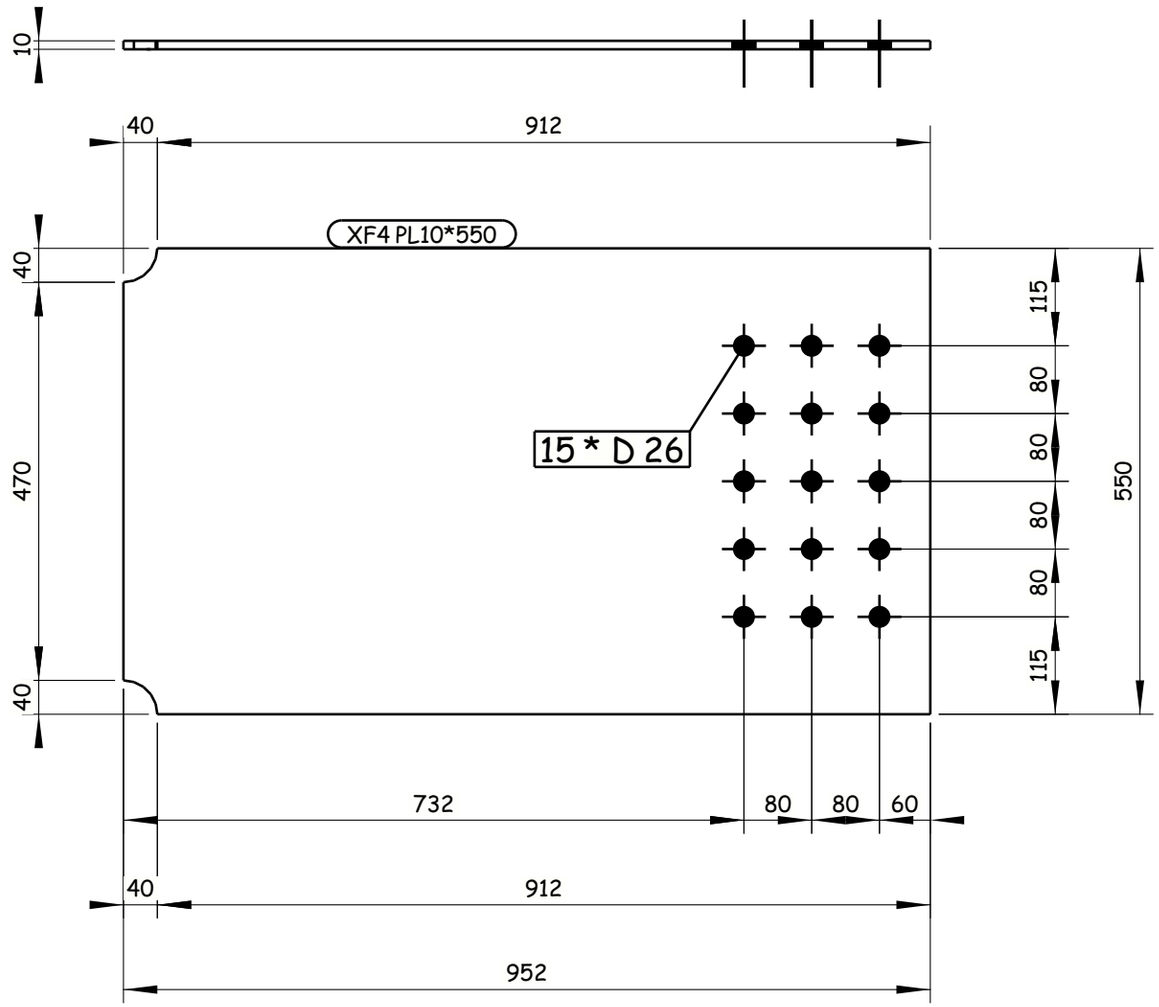

8 REQUIRED AS DRAWN E.SH XF4

GENERAL NOTES:

1. ALL DIMENSIONS ARE IN MILLIMETERS UNLESS OTHERWISE SPECIFIED.
2. LEVELS ARE IN METERS
3. DESIGN SERVICE LIFE OF 100 YEARS.
4. FLANGES OF TOP AND BOTTOM CHORDS TO BE SUPPLIED WITH IMPROVED THROUGH THICKNESS PROPERTIES Z25 ACCORDING TO EN10164.

REFERENCE DRAWINGS

1	93M-0407-SEN-6OL11-END-10118-B PAGE 01:17
2	
3	
4	
5	
6	
7	
8	
9	
10	
11	

6TH OF OCTOBER CITY RAIL TRANSIT MONORAIL &
NEW CAPITAL CITY RAIL TRANSIT MONORAIL

The Authority
Hill International
Authority Consultant

Main Contractor

Designer

CONTRACTOR & CONSULTANT:
ENGINEERING HOUSE FOR CONSULTANCY

SCALE	CHD DRAWING	DATE
AS SHOWN		20.11.2024

REV	DATE	BY	DESCRIPTION	CHK	APD
A	20-11-24	E.SH	ISSUE FOR APPROVAL	A.SH	M.M

6 October Monorail
Engineering Unit
Valid For Construction

DRAWING TITLE:
6TH OF OCTOBER MONORAIL
SHOP DRAWING FOR BRIDGE 6OL11-37
STEEL TRUSS (II).
XF4

Project Code	Rubric	Initiator	Lot	Ref	Number	Revision
93M	0407	AAC	60L11	DWG	90419	A

Tekla structures

-Drawing shall be updated according to the comments on the GA drawing.
-Approval is subjected to the approval of coordination package between multi-discipline.

REVIEWED WITH COMMENT MONORAILS PROJECT

All holes are 22mm U.N.O Length & Area & Weight per piece						
XF5	PL15*670	S355J2N	40	700.0	0.48	25.8
Mark	Profile	Grade	QTY	Length	Area	Weight

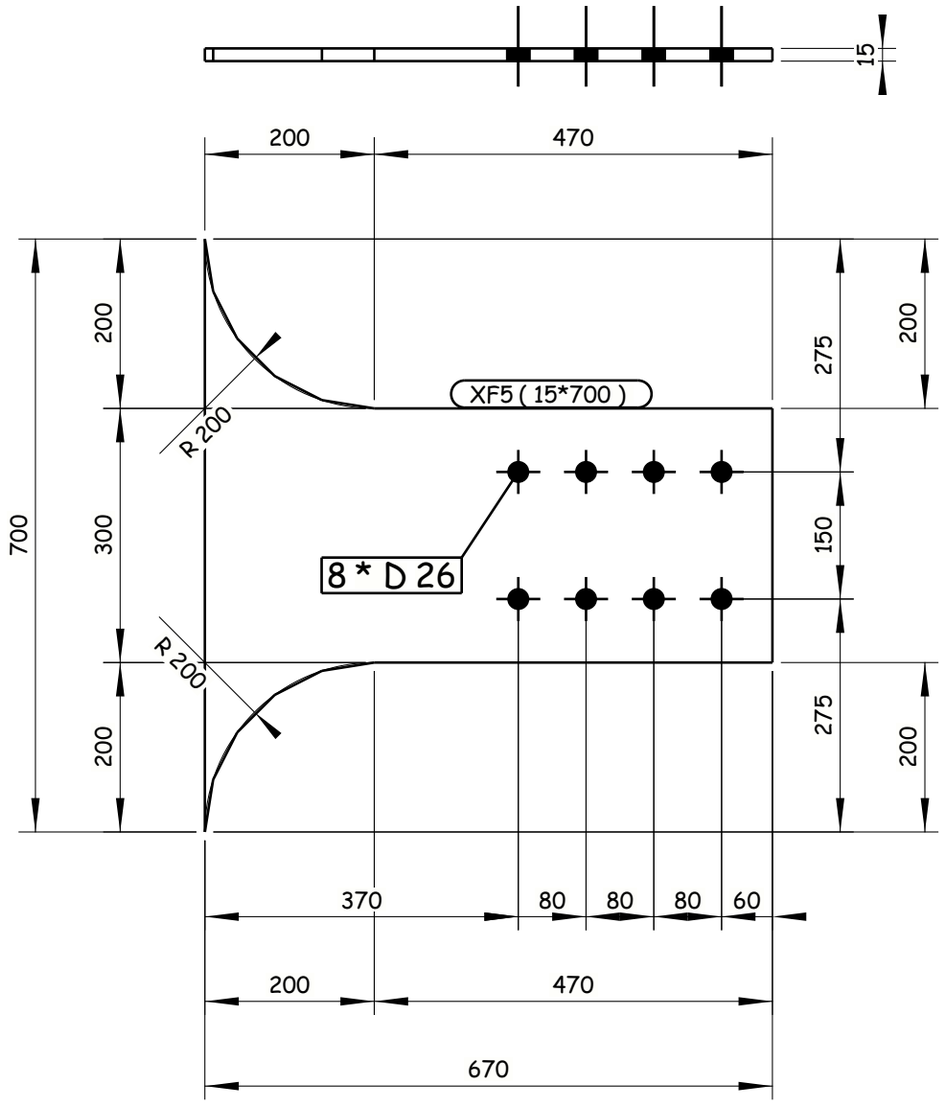

40 REQUIRED AS DRAWN E.SH XF5

6 October Monorail Engineering Unit
Valid For Construction

GENERAL NOTES:
1. ALL DIMENSIONS ARE IN MILLIMETERS UNLESS OTHERWISE SPECIFIED.
2. LEVELS ARE IN METERS
3. DESIGN SERVICE LIFE OF 100 YEARS.
4. FLANGES OF TOP AND BOTTOM CHORDS TO BE SUPPLIED WITH IMPROVED THROUGH THICKNESS PROPERTIES Z25 ACCORDING TO EN10164.

REFERENCE DRAWINGS

1	93M-0407-SEN-6OL11-END-10118-B PAGE 01:17
2	
3	
4	
5	
6	
7	
8	
9	
10	
11	

6TH OF OCTOBER CITY RAIL TRANSIT MONORAIL & NEW CAPITAL CITY RAIL TRANSIT MONORAIL

وزارة النقل MINISTRY OF TRANSPORT
The Authority
Hill International
Authority Consultant

ORASCOM CONSTRUCTION
BOMBARDIER
Main Contractor

SENER
SHAKER CONSULTANCY GROUP
Designer

CONTRACTOR CONSULTANT:
EHC
ENGINEERING HOUSE FOR CONSULTANCY

SCALE AS SHOWN	SHOP DRAWING	DATE 20.11.2024

REV	DATE	BY	DESCRIPTION	CHK	APD
A	20-11-24	E.SH	ISSUE FOR APPROVAL	A.SH	M.M

DRAWING TITLE:
6TH OF OCTOBER MONORAIL
SHOP DRAWING FOR BRIDGE 6OL11-37
STEEL TRUSS (II).
XF5

Project Code	Rubric	Initiator	Lot	Ref	Number	Revision
9 3 M	0 4 0 7	A A C	6 0 L 1 1	D W G	90420	A

Tekla structures

-Drawing shall be updated according to the comments on the GA drawing.
-Approval is subjected to the approval of coordination package between multi-discipline.

REVIEWED WITH COMMENT
MONORAILS PROJECT

All holes are 22mm U.N.O Length & Area & Weight per piece

Mark	Profile	Grade	QTY	Length	Area	Weight
XF6	FLT15*300	S355J2N	20	2840.0	1.80	100.3

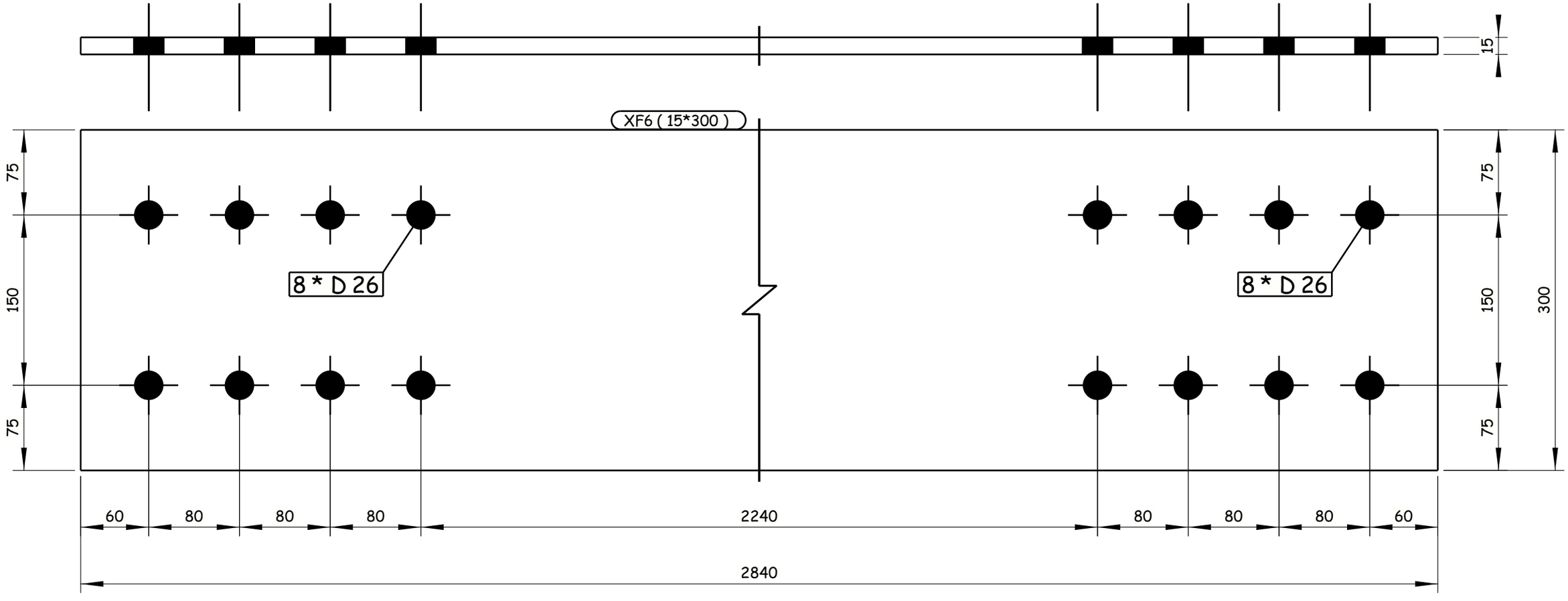

20 REQUIRED AS DRAWN E.SH XF6

Tekla structures

GENERAL NOTES:

1. ALL DIMENSIONS ARE IN MILLIMETERS UNLESS OTHERWISE SPECIFIED.
2. LEVELS ARE IN METERS
3. DESIGN SERVICE LIFE OF 100 YEARS.
4. FLANGES OF TOP AND BOTTOM CHORDS TO BE SUPPLIED WITH IMPROVED THROUGH THICKNESS PROPERTIES Z25 ACCORDING TO EN10164.

REFERENCE DRAWINGS

1	93M-0407-SEN-6OL11-END-10118-B PAGE 01:17
2	
3	
4	
5	
6	
7	
8	
9	
10	
11	

6TH OF OCTOBER CITY RAIL TRANSIT MONORAIL &
NEW CAPITAL CITY RAIL TRANSIT MONORAIL

The Authority — Hill International — Authority Consultant
ORASCOM CONSTRUCTION — Main Contractor
BOMBARDIER
SENER — SHAKER CONSULTANCY GROUP — Designer

CONTRACTOR & CONSULTANT:
ENGINEERING HOUSE FOR CONSULTANCY

6 October Monorail Engineering Unit
Valid For Construction

SCALE: AS SHOWN | CHK'D DRAWING | DATE: 20.11.2024

REV	DATE	BY	DESCRIPTION	CHK	APD
A	20-11-24	E.SH	ISSUE FOR APPROVAL	A.SH	M.M

DRAWING TITLE:
6TH OF OCTOBER MONORAIL
SHOP DRAWING FOR BRIDGE 6OL11-37
STEEL TRUSS (II).
XF6

Project Code	Rubric	Initiator	Lot	Ref	Number	Revision
9 3 M	0 4 0 7	A A C	6 0 L 1 1	D W G	90421	A

-Drawing shall be updated according to the comments on the GA drawing.
-Approval is subjected to the approval of coordination package between multi-discipline.

REVIEWED WITH COMMENT
MONORAILS PROJECT

All holes are 22mm U.N.O Length & Area & Weight per piece

Mark	Profile	Grade	QTY	Length	Area	Weight
XF7	PL10*550	S355J2N	8	952.5	1.04	39.8

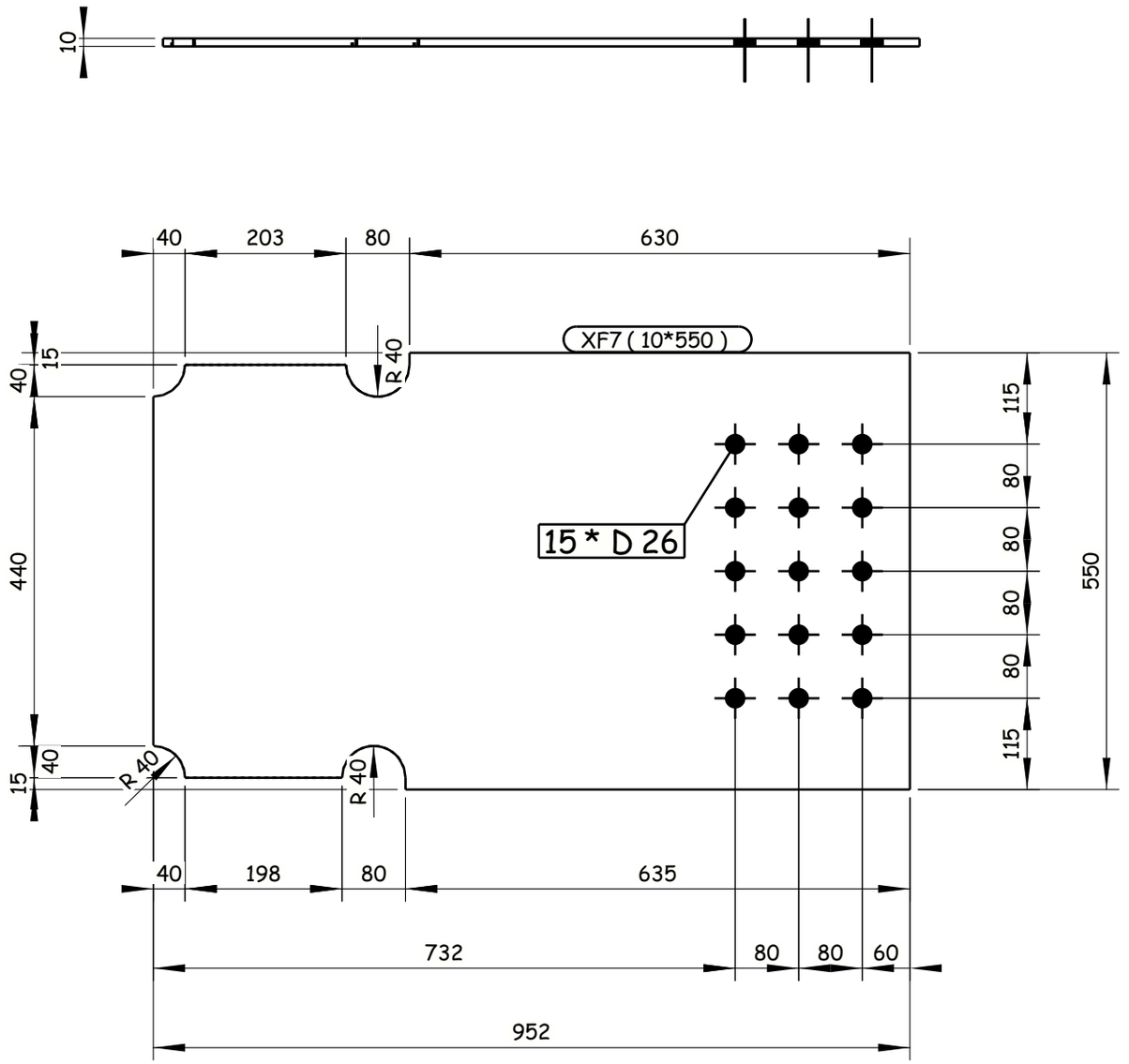

8 REQUIRED AS DRAWN E.SH XF7

Tekla structures

GENERAL NOTES:

1. ALL DIMENSIONS ARE IN MILLIMETERS UNLESS OTHERWISE SPECIFIED.
2. LEVELS ARE IN METERS
3. DESIGN SERVICE LIFE OF 100 YEARS.
4. FLANGES OF TOP AND BOTTOM CHORDS TO BE SUPPLIED WITH IMPROVED THROUGH THICKNESS PROPERTIES Z25 ACCORDING TO EN10164.

REFERENCE DRAWINGS

1	93M-0407-SEN-6OL11-END-10118-B PAGE 01:17
2	
3	
4	
5	
6	
7	
8	
9	
10	
11	

6TH OF OCTOBER CITY RAIL TRANSIT MONORAIL &
NEW CAPITAL CITY RAIL TRANSIT MONORAIL

The Authority — Hill International — Authority Consultant
ORASCOM CONSTRUCTION — Main Contractor
BOMBARDIER — SENER — SHAKER CONSULTANCY GROUP — Designer

CONTRACTOR & CONSULTANT:
ENGINEERING HOUSE FOR CONSULTANCY

6 October Monorail
Engineering Unit
Valid For Construction

SCALE	SHD DRAWING	DATE
AS SHOWN		20.11.2024

REV	DATE	BY	DESCRIPTION	CHK	APD
A	20-11-24	E.SH	ISSUE FOR APPROVAL	A.SH	M.M

DRAWING TITLE:
6TH OF OCTOBER MONORAIL
SHOP DRAWING FOR BRIDGE 6OL11-37
STEEL TRUSS (II).
XF7

Project Code	Rubric	Initiator	Lot	Ref	Number	Revision
93M	0407	AAC	60L11	DWG	90422	A

-Drawing shall be updated according to the comments on the GA drawing.
-Approval is subjected to the approval of coordination package between multi-discipline.

REVIEWED WITH COMMENT
MONORAILS PROJECT

All holes are 22mm U.N.O Length & Area & Weight per piece

Mark	Profile	Grade	QTY	Length	Area	Weight
XF8	PL10*550	S355J2N	2	952.5	1.04	39.8

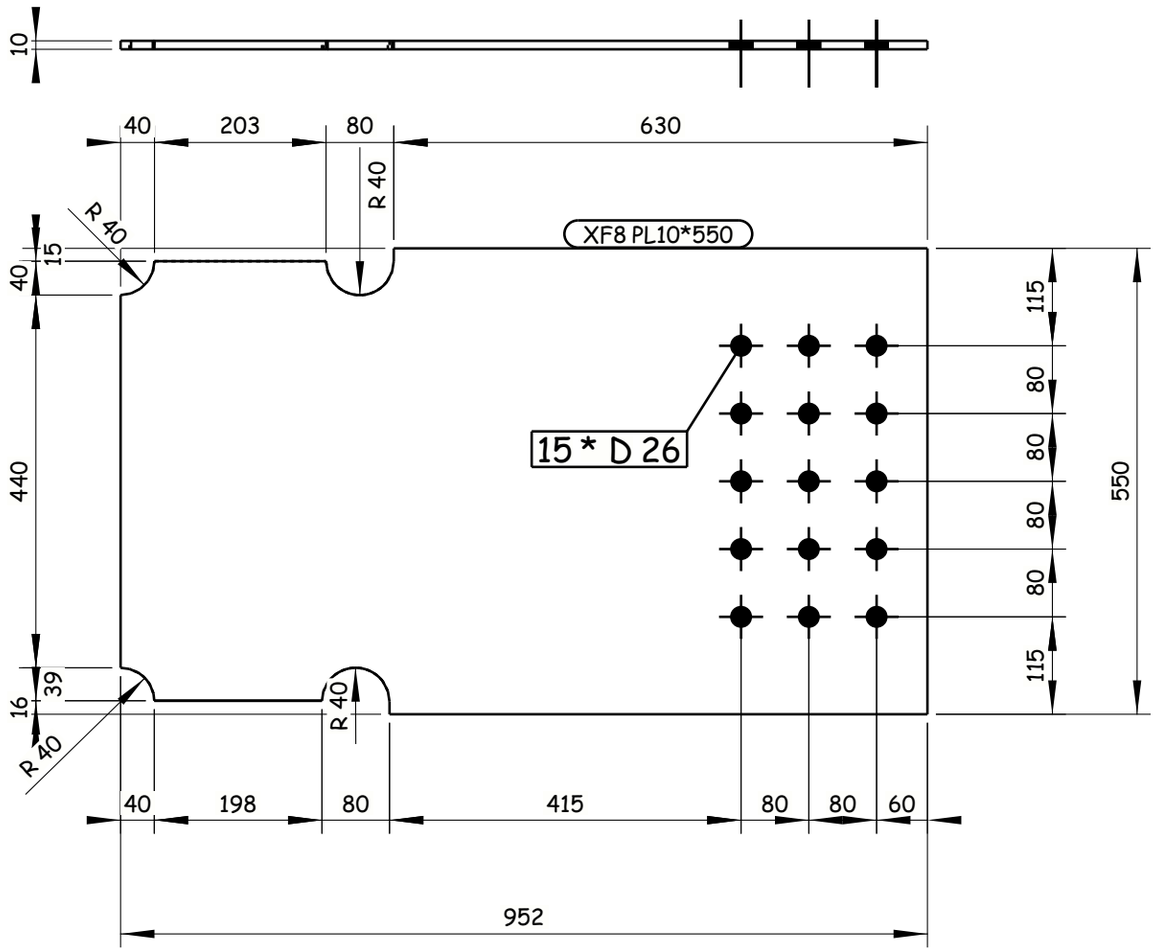

2 REQUIRED AS DRAWN E.SH XF8

Tekla structures

GENERAL NOTES:

1. ALL DIMENSIONS ARE IN MILLIMETERS UNLESS OTHERWISE SPECIFIED.
2. LEVELS ARE IN METERS
3. DESIGN SERVICE LIFE OF 100 YEARS.
4. FLANGES OF TOP AND BOTTOM CHORDS TO BE SUPPLIED WITH IMPROVED THROUGH THICKNESS PROPERTIES Z25 ACCORDING TO EN10164.

REFERENCE DRAWINGS

1	93M-0407-SEN-6OL11-END-10118-B PAGE 01:17
2	
3	
4	
5	
6	
7	
8	
9	
10	
11	

6TH OF OCTOBER CITY RAIL TRANSIT MONORAIL &
NEW CAPITAL CITY RAIL TRANSIT MONORAIL

The Authority
Hill International
Authority Consultant

ORASCOM CONSTRUCTION
Main Contractor

BOMBARDIER
SENER
SHAKER CONSULTANCY GROUP
Designer

CONTRACTOR / CONSULTANT:
ENGINEERING HOUSE FOR CONSULTANCY

6 October Monorail
Engineering Unit
Valid For Construction

SCALE	SHD DRAWING	DATE
AS SHOWN		20.11.2024

REV	DATE	BY	DESCRIPTION	CHK	APD
A	20-11-24	E.SH	ISSUE FOR APPROVAL	A.SH	M.M

DRAWING TITLE:
6TH OF OCTOBER MONORAIL
SHOP DRAWING FOR BRIDGE 6OL11-37
STEEL TRUSS (II).
XF8

Project Code	Rubric	Initiator	Lot	Ref	Number	Revision
93M	0407	AAC	60L11	DWG	90423	A

-Drawing shall be updated according to the comments on the GA drawing.
-Approval is subjected to the approval of coordination package between multi-discipline.

REVIEWED WITH COMMENT
MONORAILS PROJECT

All holes are 22mm U.N.O Length & Area & Weight per piece

Mark	Profile	Grade	QTY	Length	Area	Weight
XF9	FLT15*300	S355J2N	22	2855.0	1.81	100.9

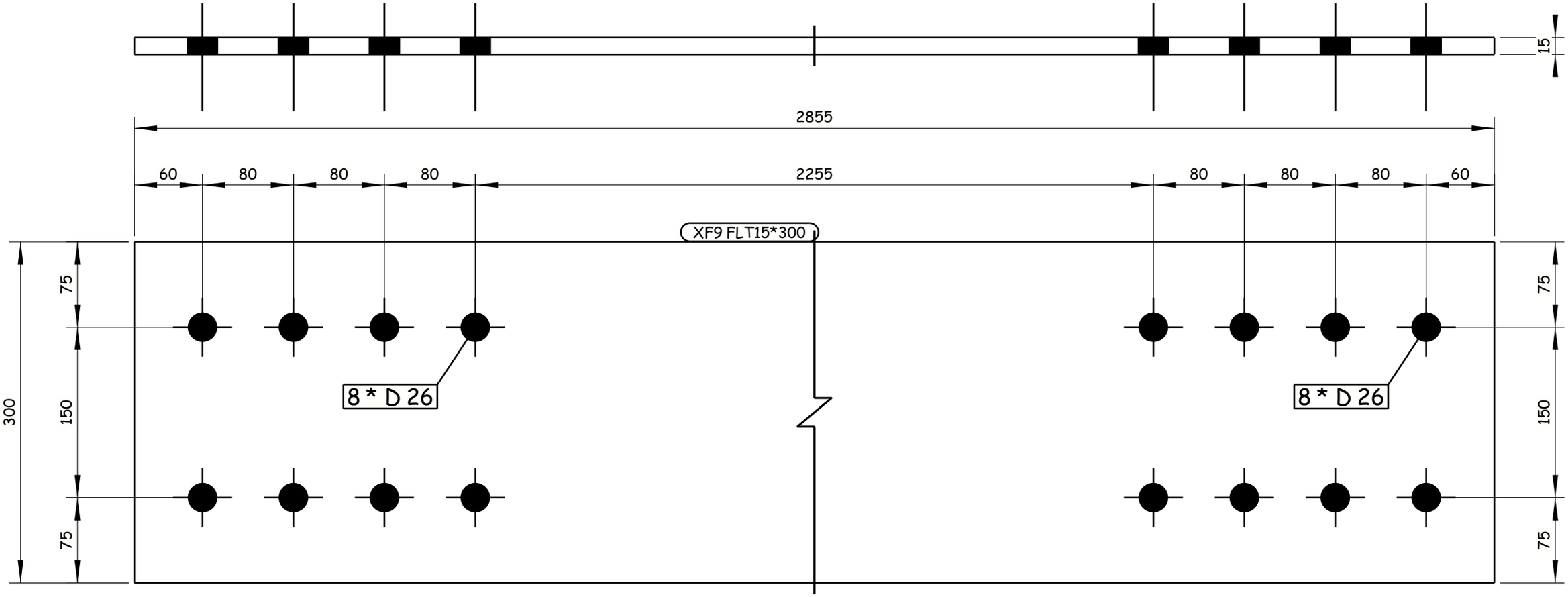

22 REQUIRED AS DRAWN E.SH XF9

Tekla structures

GENERAL NOTES:

1. ALL DIMENSIONS ARE IN MILLIMETERS UNLESS OTHERWISE SPECIFIED.
2. LEVELS ARE IN METERS
3. DESIGN SERVICE LIFE OF 100 YEARS.
4. FLANGES OF TOP AND BOTTOM CHORDS TO BE SUPPLIED WITH IMPROVED THROUGH THICKNESS PROPERTIES Z25 ACCORDING TO EN10164.

REFERENCE DRAWINGS

1	93M-0407-SEN-6OL11-END-10118-B PAGE 01:17
2	
3	
4	
5	
6	
7	
8	
9	
10	
11	

6TH OF OCTOBER CITY RAIL TRANSIT MONORAIL &
NEW CAPITAL CITY RAIL TRANSIT MONORAIL

The Authority — Hill International — Authority Consultant

ORASCOM CONSTRUCTION — Main Contractor

BOMBARDIER — SENER — SHAKER CONSULTANCY GROUP — Designer

CONTRACTOR / CONSULTANT :

ENGINEERING HOUSE FOR CONSULTANCY

6 October Monorail
Engineering Unit
Valid For Construction

SCALE: AS SHOWN | CHD/DRWING: | DATE: 20.11.2024

REV	DATE	BY	DESCRIPTION	CHK	APD
A	20-11-24	E.SH	ISSUE FOR APPROVAL	A.SH	M.M

DRAWING TITLE:
6TH OF OCTOBER MONORAIL
SHOP DRAWING FOR BRIDGE 6OL11-37
STEEL TRUSS (II).
XF9

Project Code	Rubric	Initiator	Lot	Ref	Number	Revision
93M	0407	AAC	60L11	DWG	90424	A

-Drawing shall be updated according to the comments on the GA drawing.
-Approval is subjected to the approval of coordination package between multi-discipline.

REVIEWED WITH COMMENT
MONORAILS PROJECT

All holes are 22mm U.N.O Length & Area & Weight per piece

Mark	Profile	Grade	QTY	Length	Area	Weight
XF10	PL10*550	S355J2N	2	952.5	1.04	39.8

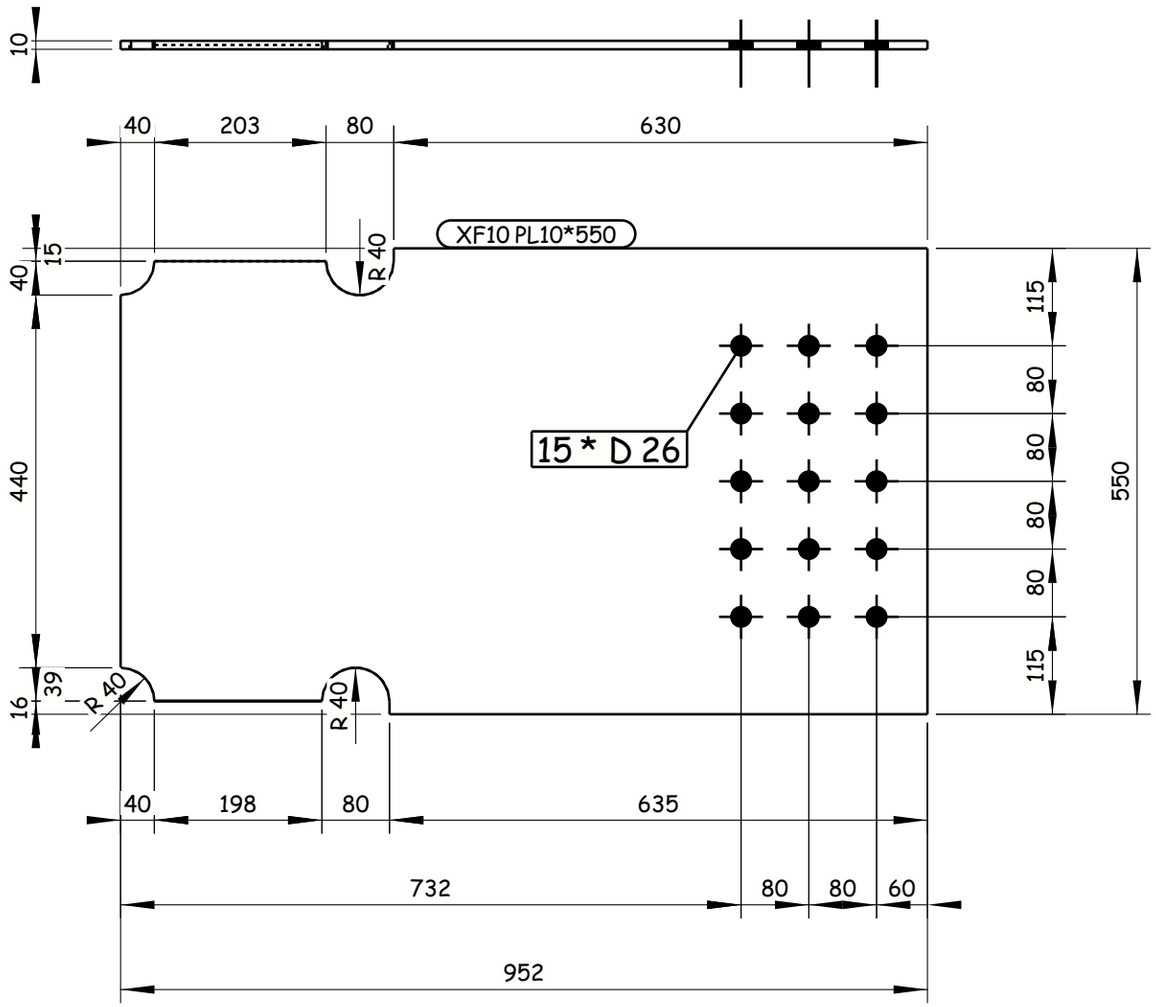

2 REQUIRED AS DRAWN E.SH XF10

6 October Monorail
Engineering Unit
Valid For Construction

Tekla structures

GENERAL NOTES:

1. ALL DIMENSIONS ARE IN MILLIMETERS UNLESS OTHERWISE SPECIFIED.
2. LEVELS ARE IN METERS
3. DESIGN SERVICE LIFE OF 100 YEARS.
4. FLANGES OF TOP AND BOTTOM CHORDS TO BE SUPPLIED WITH IMPROVED THROUGH THICKNESS PROPERTIES Z25 ACCORDING TO EN10164.

REFERENCE DRAWINGS

1	93M-0407-SEN-6OL11-END-10118-B PAGE 01:17
2	
3	
4	
5	
6	
7	
8	
9	
10	
11	

6TH OF OCTOBER CITY RAIL TRANSIT MONORAIL &
NEW CAPITAL CITY RAIL TRANSIT MONORAIL

The Authority — Hill International — Authority Consultant
ORASCOM CONSTRUCTION — Main Contractor
BOMBARDIER — Designer
SENER / SHAKER CONSULTANCY GROUP

CONTRACTOR / CONSULTANT:
ENGINEERING HOUSE FOR CONSULTANCY

SCALE: AS SHOWN | CHD DRAWING | DATE: 20.11.2024

REV	DATE	BY	DESCRIPTION	CHK	APD
A	20-11-24	E.SH	ISSUE FOR APPROVAL	A.SH	M.M

DRAWING TITLE:
6TH OF OCTOBER MONORAIL
SHOP DRAWING FOR BRIDGE 6OL11-37
STEEL TRUSS (II).
XF10

Project Code	Rubric	Initiator	Lot	Ref	Number	Revision
93M	0407	AAC	60L11	DWG	90425	A

-Drawing shall be updated according to the comments on the GA drawing.
-Approval is subjected to the approval of coordination package between multi-discipline.

REVIEWED WITH COMMENT
MONORAILS PROJECT

All holes are 22mm U.N.O Length & Area & Weight per piece

Mark	Profile	Grade	QTY	Length	Area	Weight
XW1	PL10*570	S355J2N	8	945.0	1.07	40.9

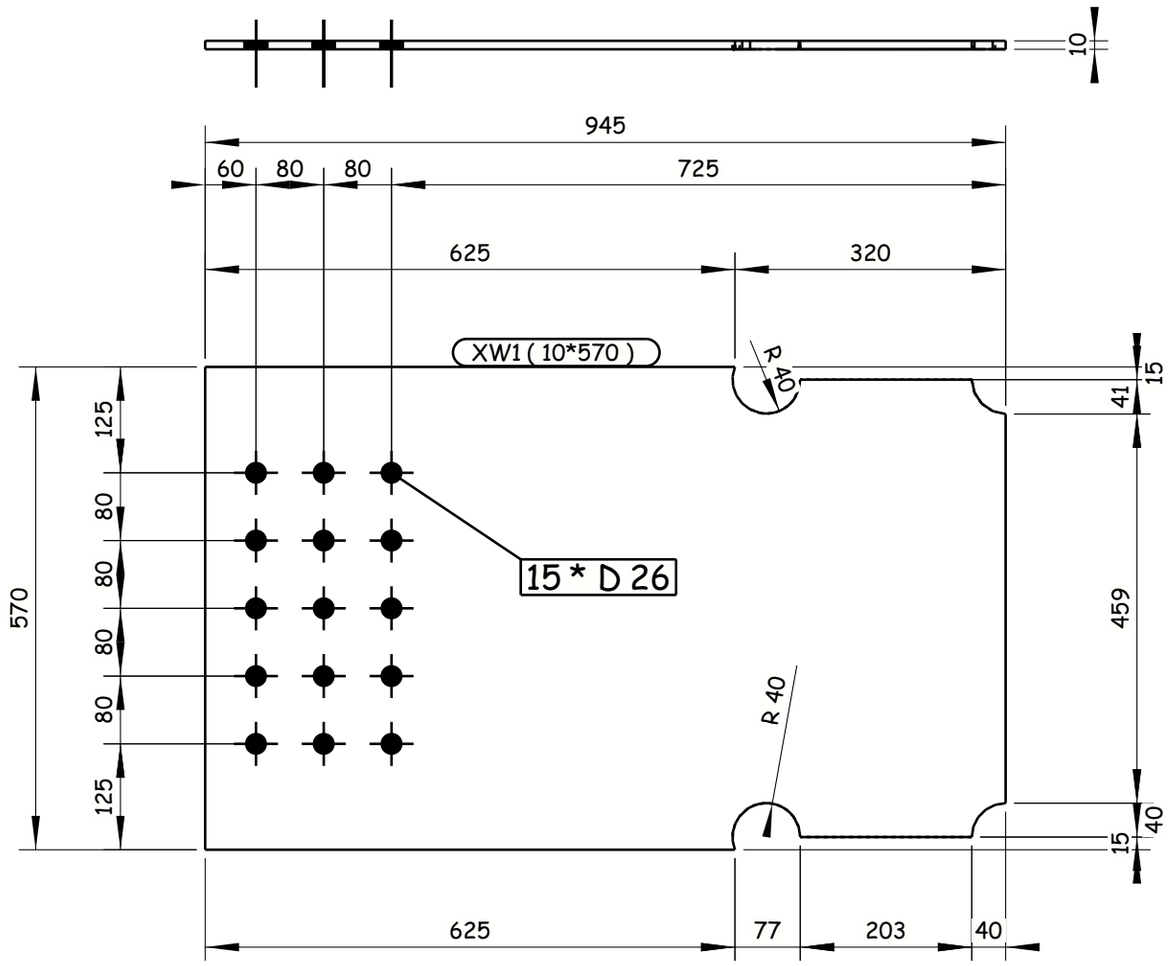

8 REQUIRED AS DRAWN E.SH XW1

GENERAL NOTES:

1. ALL DIMENSIONS ARE IN MILLIMETERS UNLESS OTHERWISE SPECIFIED.
2. LEVELS ARE IN METERS
3. DESIGN SERVICE LIFE OF 100 YEARS.
4. FLANGES OF TOP AND BOTTOM CHORDS TO BE SUPPLIED WITH IMPROVED THROUGH THICKNESS PROPERTIES Z25 ACCORDING TO EN10164.

REFERENCE DRAWINGS

1	93M-0407-SEN-6OL11-END-10118-B PAGE 01:17
2	
3	
4	
5	
6	
7	
8	
9	
10	
11	

6TH OF OCTOBER CITY RAIL TRANSIT MONORAIL &
NEW CAPITAL CITY RAIL TRANSIT MONORAIL

The Authority — Hill International — Authority Consultant
ORASCOM CONSTRUCTION — BOMBARDIER — Main Contractor
SENER — SHAKER CONSULTANCY GROUP — Designer

CONTRACTOR & CONSULTANT:
EHC ENGINEERING HOUSE FOR CONSULTANCY

6 October Monorail
Engineering Unit
Valid For Cönstruction

SCALE	SHOP DRAWING	DATE
AS SHOWN		20.11.2024

DRAWING TITLE:
6TH OF OCTOBER MONORAIL
SHOP DRAWING FOR BRIDGE 6OL11-37
STEEL TRUSS (II).
XW1

REV.	DATE	BY	DESCRIPTION	CHK	APD.
A	20-11-24	E.SH	ISSUE FOR APPROVAL	A.SH	M.M

Project Code	Rubric	Initiator	Lot	Ref	Number	Revision
93M	0407	AAC	60L11	DWG	90426	A

Tekla structures

-Drawing shall be updated according to the comments on the GA drawing.
-Approval is subjected to the approval of coordination package between multi-discipline.

REVIEWED WITH COMMENT
MONORAILS PROJECT

All holes are 22mm U.N.O Length & Area & Weight per piece

Mark	Profile	Grade	QTY	Length	Area	Weight
XW2	PL10*570	S355J2N	8	945.0	1.05	39.8

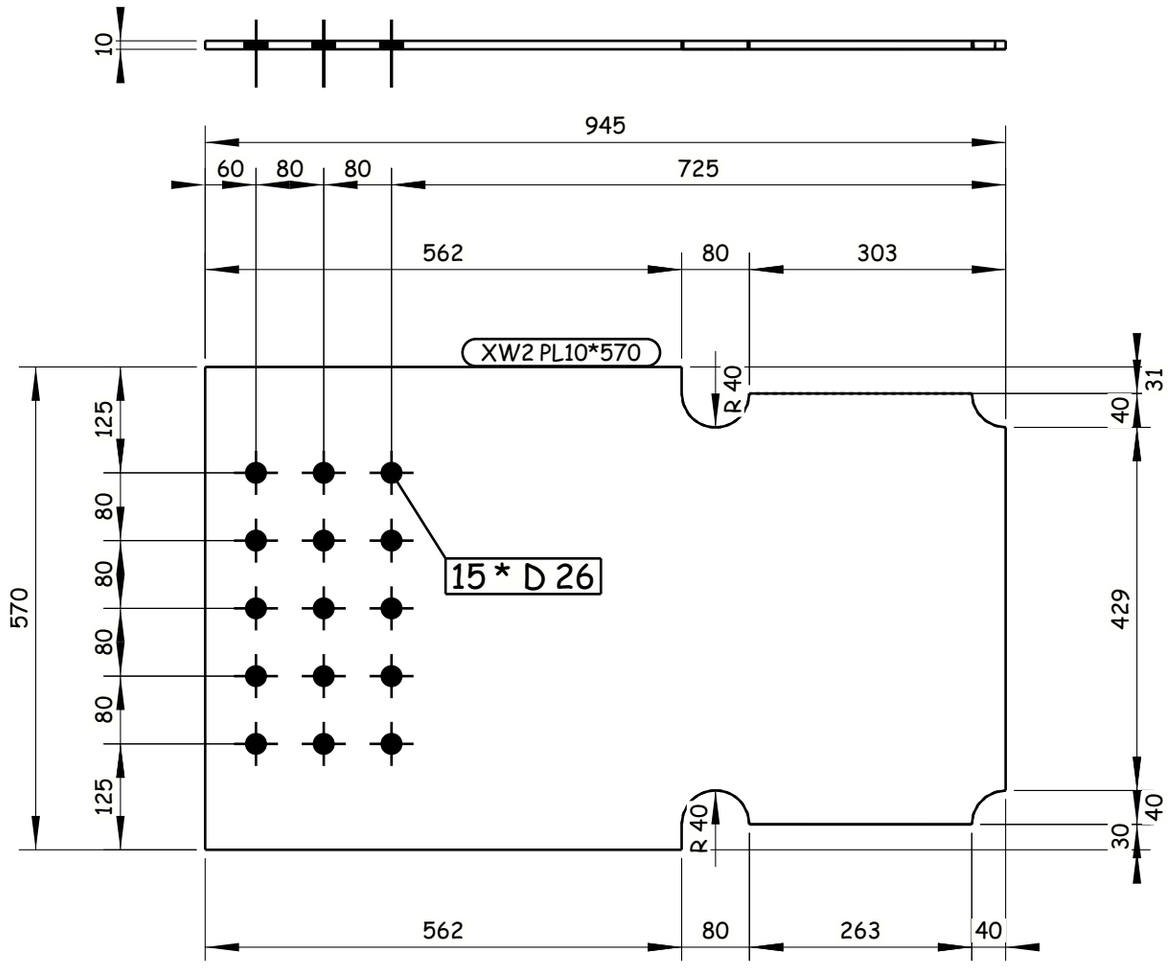

8 REQUIRED AS DRAWN E.SH XW2

Tekla structures

GENERAL NOTES:

1. ALL DIMENSIONS ARE IN MILLIMETERS UNLESS OTHERWISE SPECIFIED.
2. LEVELS ARE IN METERS
3. DESIGN SERVICE LIFE OF 100 YEARS.
4. FLANGES OF TOP AND BOTTOM CHORDS TO BE SUPPLIED WITH IMPROVED THROUGH THICKNESS PROPERTIES Z25 ACCORDING TO EN10164.

REFERENCE DRAWINGS

1	93M-0407-SEN-6OL11-END-10118-B PAGE 01:17
2	
3	
4	
5	
6	
7	
8	
9	
10	
11	

6TH OF OCTOBER CITY RAIL TRANSIT MONORAIL &
NEW CAPITAL CITY RAIL TRANSIT MONORAIL

The Authority
Hill International
Authority Consultant

Main Contractor

Designer

CONTRACTOR & CONSULTANT:
ENGINEERING HOUSE FOR CONSULTANCY

SCALE: AS SHOWN | CHK'D DRAWING | DATE: 20.11.2024

REV	DATE	BY	DESCRIPTION	CHK	APD
A	20-11-24	E.SH	ISSUE FOR APPROVAL	A.SH	M.M

6 October Monorail
Engineering Unit
Valid For Construction

DRAWING TITLE:
6TH OF OCTOBER MONORAIL
SHOP DRAWING FOR BRIDGE 6OL11-37
STEEL TRUSS (II).
XW2

Project Code	Rubric	Initiator	Lot	Ref	Number	Revision
93M	0407	AAC	60L11	DWG	90427	A

-Drawing shall be updated according to the comments on the GA drawing.
-Approval is subjected to the approval of coordination package between multi-discipline.

REVIEWED WITH COMMENT
MONORAILS PROJECT

All holes are 22mm U.N.O Length & Area & Weight per piece

Mark	Profile	Grade	QTY	Length	Area	Weight
XW3	PL10*550	S355J2N	10	2840.0	3.19	122.6

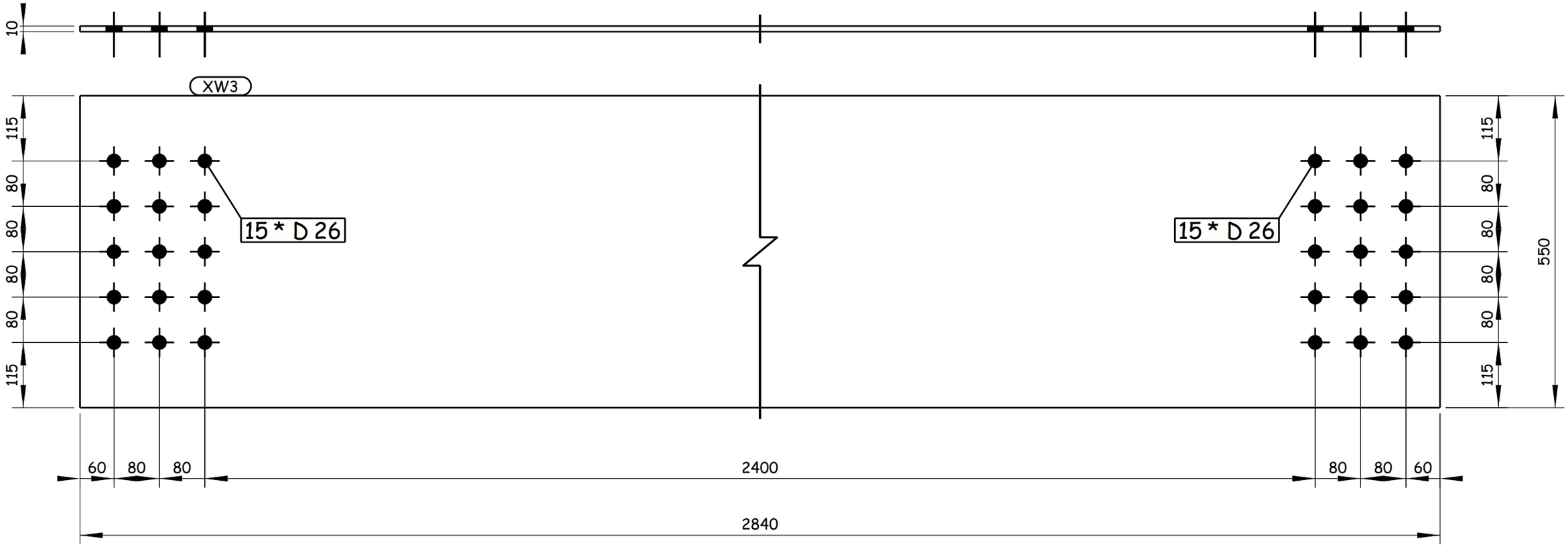

10 REQUIRED AS DRAWN E.SH XW3

Tekla structures

GENERAL NOTES:

1. ALL DIMENSIONS ARE IN MILLIMETERS UNLESS OTHERWISE SPECIFIED.
2. LEVELS ARE IN METERS
3. DESIGN SERVICE LIFE OF 100 YEARS.
4. FLANGES OF TOP AND BOTTOM CHORDS TO BE SUPPLIED WITH IMPROVED THROUGH THICKNESS PROPERTIES Z25 ACCORDING TO EN10164.

REFERENCE DRAWINGS

1	93M-0407-SEN-6OL11-END-10118-B PAGE 01:17
2	
3	
4	
5	
6	
7	
8	
9	
10	
11	

6TH OF OCTOBER CITY RAIL TRANSIT MONORAIL &
NEW CAPITAL CITY RAIL TRANSIT MONORAIL

The Authority
Hill International
Authority Consultant

Main Contractor

Designer

CONTRACTOR CONSULTANT :

ENGINEERING HOUSE FOR CONSULTANCY

SCALE AS SHOWN | CHD/DRWING | DATE 20.11.2024

REV	DATE	BY	DESCRIPTION	CHK	APD
A	20-11-24	E.SH	ISSUE FOR APPROVAL	A.SH	M.M

6 October Monorail
Engineering Unit
Valid For Construction

DRAWING TITLE:
6TH OF OCTOBER MONORAIL
SHOP DRAWING FOR BRIDGE 6OL11-37
STEEL TRUSS (II).
XW3

Project Code	Rubric	Initiator	Lot	Ref	Number	Revision
93M	0407	AAC	60L11	DWG	90428	A

-Drawing shall be updated according to the comments on the GA drawing.
-Approval is subjected to the approval of coordination package between multi-discipline.

REVIEWED WITH COMMENT MONORAILS PROJECT

All holes are 22mm U.N.O Length & Area & Weight per piece

Mark	Profile	Grade	QTY	Length	Area	Weight
XW4	PL10*570	S355J2N	11	2855.0	3.32	127.7

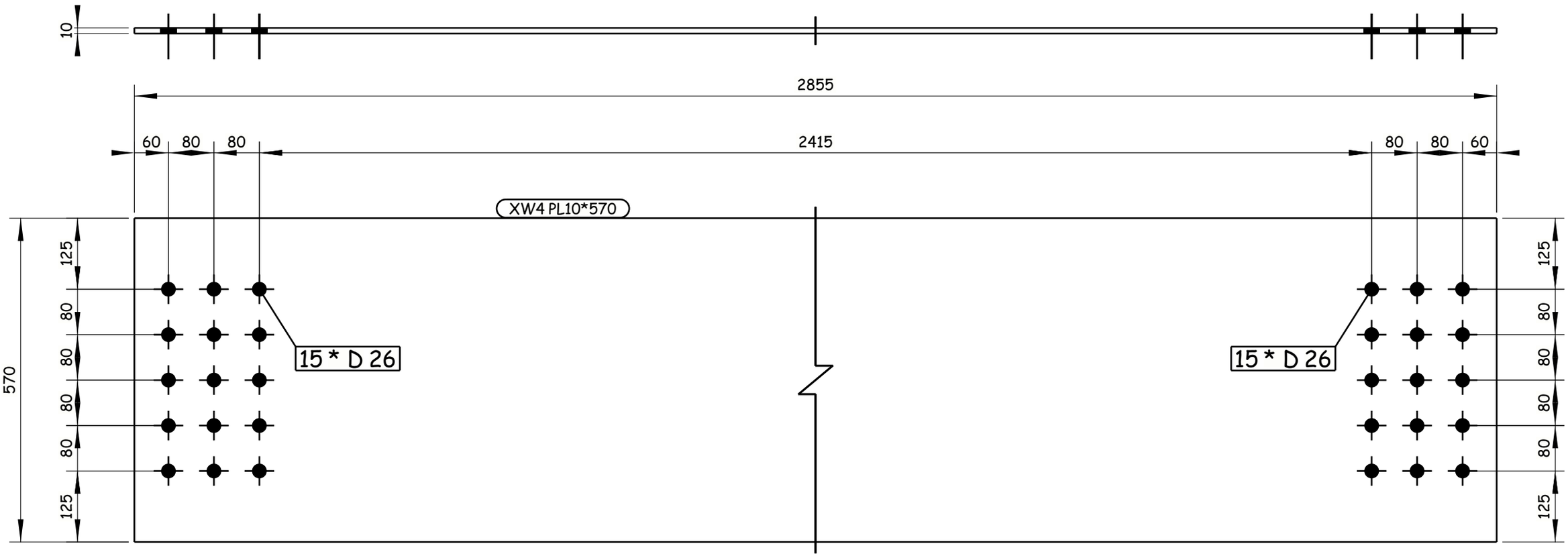

11 REQUIRED AS DRAWN E.SH XW4

6 October Monorail Engineering Unit
Valid For Construction

GENERAL NOTES:
1. ALL DIMENSIONS ARE IN MILLIMETERS UNLESS OTHERWISE SPECIFIED.
2. LEVELS ARE IN METERS
3. DESIGN SERVICE LIFE OF 100 YEARS.
4. FLANGES OF TOP AND BOTTOM CHORDS TO BE SUPPLIED WITH IMPROVED THROUGH THICKNESS PROPERTIES Z25 ACCORDING TO EN10164.

REFERENCE DRAWINGS

1	93M-0407-SEN-6OL11-END-10118-B PAGE 01:17
2	
3	
4	
5	
6	
7	
8	
9	
10	
11	

6TH OF OCTOBER CITY RAIL TRANSIT MONORAIL & NEW CAPITAL CITY RAIL TRANSIT MONORAIL

وزارة النقل MINISTRY OF TRANSPORT
The Authority
Hill International
Authority Consultant

ORASCOM CONSTRUCTION
BOMBARDIER
Main Contractor

SENER
SHAKER CONSULTANCY GROUP
Designer

CONTRACTOR CONSULTANT:
EHC
ENGINEERING HOUSE FOR CONSULTANCY

SCALE AS SHOWN	SHOP DRAWING	DATE 20.11.2024

REV	DATE	BY	DESCRIPTION	CHK	APD
A	20-11-24	E.SH	ISSUE FOR APPROVAL	A.SH	M.M

DRAWING TITLE:
6TH OF OCTOBER MONORAIL
SHOP DRAWING FOR BRIDGE 6OL11-37
STEEL TRUSS (II).
XW4

Project Code	Rubric	Initiator	Lot	Ref	Number	Revision
93M	0407	AAC	6OL11	DWG	90429	A

Tekla structures

-Drawing shall be updated according to the comments on the GA drawing.
-Approval is subjected to the approval of coordination package between multi-discipline.

REVIEWED WITH COMMENT
MONORAILS PROJECT

All holes are 22mm U.N.O Length & Area & Weight per piece						
XW5	PL10*570	S355J2N	4	945.0	1.05	39.8
Mark	Profile	Grade	QTY	Length	Area	Weight

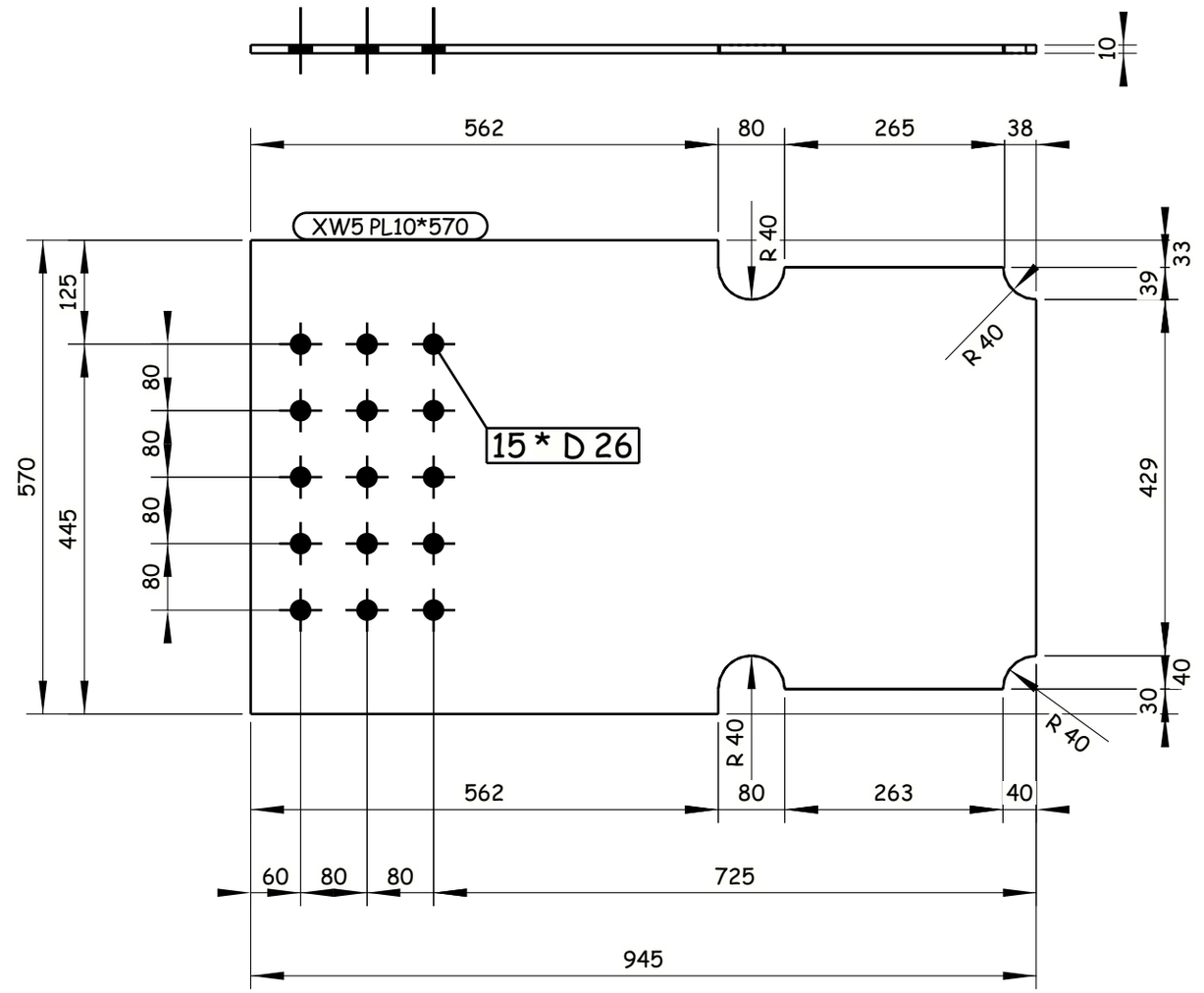

4 REQUIRED AS DRAWN E.SH XW5

GENERAL NOTES:

1. ALL DIMENSIONS ARE IN MILLIMETERS UNLESS OTHERWISE SPECIFIED.
2. LEVELS ARE IN METERS
3. DESIGN SERVICE LIFE OF 100 YEARS.
4. FLANGES OF TOP AND BOTTOM CHORDS TO BE SUPPLIED WITH IMPROVED THROUGH THICKNESS PROPERTIES Z25 ACCORDING TO EN10164.

REFERENCE DRAWINGS

1	93M-0407-SEN-6OL11-END-10118-B PAGE 01:17
2	
3	
4	
5	
6	
7	
8	
9	
10	
11	

6TH OF OCTOBER CITY RAIL TRANSIT MONORAIL &
NEW CAPITAL CITY RAIL TRANSIT MONORAIL

The Authority — Hill International Authority Consultant

Main Contractor: ORASCOM CONSTRUCTION, BOMBARDIER

Designer: SENER, SHAKER CONSULTANCY GROUP

CONTRACTOR / CONSULTANT: EHC ENGINEERING HOUSE FOR CONSULTANCY

SCALE	CHD DRAWING	DATE
AS SHOWN		20.11.2024

REV	DATE	BY	DESCRIPTION	CHK	APD
A	20-11-24	E.SH	ISSUE FOR APPROVAL	A.SH	M.M

6 October Monorail
Engineering Unit
Valid For Construction

DRAWING TITLE:
6TH OF OCTOBER MONORAIL
SHOP DRAWING FOR BRIDGE 6OL11-37
STEEL TRUSS (II).
XW5

Project Code	Rubric	Initiator	Lot	Ref	Number	Revision
9 3 M 0	4 0 7	A A C	6 0 L 1 1	D W G	90430	A

Tekla structures

-Drawing shall be updated according to the comments on the GA drawing.
-Approval is subjected to the approval of coordination package between multi-discipline.

REVIEWED WITH COMMENT
MONORAILS PROJECT

All holes are 22mm U.N.O Length & Area & Weight per piece						
XW6	PL10*570	S355J2N	2	945.0	1.05	39.8
Mark	Profile	Grade	QTY	Length	Area	Weight

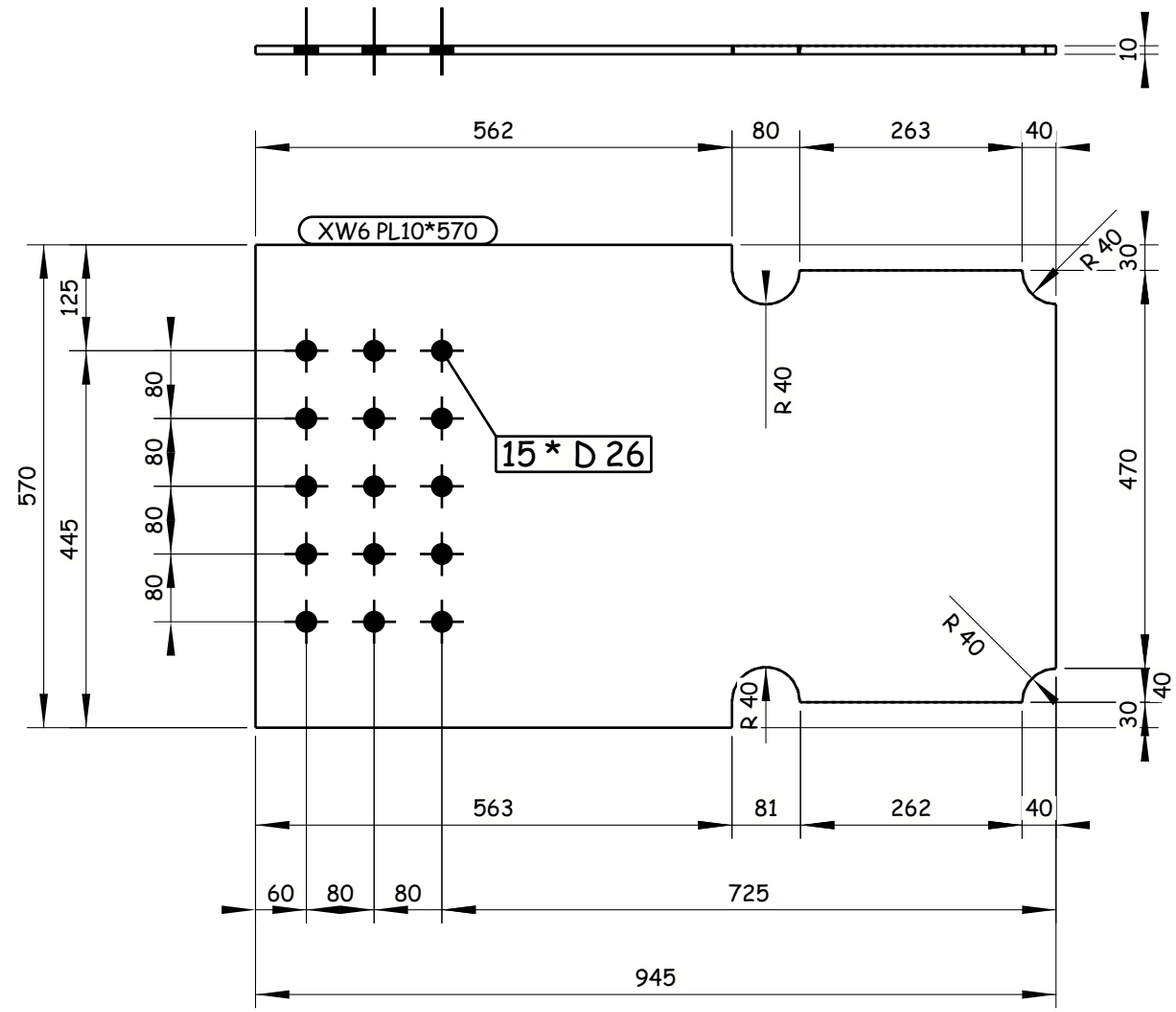

2 REQUIRED AS DRAWN E.SH XW6

GENERAL NOTES:

1. ALL DIMENSIONS ARE IN MILLIMETERS UNLESS OTHERWISE SPECIFIED.
2. LEVELS ARE IN METERS
3. DESIGN SERVICE LIFE OF 100 YEARS.
4. FLANGES OF TOP AND BOTTOM CHORDS TO BE SUPPLIED WITH IMPROVED THROUGH THICKNESS PROPERTIES Z25 ACCORDING TO EN10164.

REFERENCE DRAWINGS

1	93M-0407-SEN-6OL11-END-10118-B PAGE 01:17
2	
3	
4	
5	
6	
7	
8	
9	
10	
11	

6TH OF OCTOBER CITY RAIL TRANSIT MONORAIL &
NEW CAPITAL CITY RAIL TRANSIT MONORAIL

The Authority — Hill International — Authority Consultant
ORASCOM CONSTRUCTION — BOMBARDIER — Main Contractor
SENER — SHAKER CONSULTANCY GROUP — Designer

CONTRACTOR / CONSULTANT: ENGINEERING HOUSE FOR CONSULTANCY

SCALE	CHD DRAWING	DATE
AS SHOWN		20.11.2024

REV	DATE	BY	DESCRIPTION	CHK	APD
A	20-11-24	E.SH	ISSUE FOR APPROVAL	A.SH	M.M

6 October Monorail
Engineering Unit
Valid For Construction

DRAWING TITLE:
6TH OF OCTOBER MONORAIL
SHOP DRAWING FOR BRIDGE 6OL11-37
STEEL TRUSS (II).
XW6

Project Code	Rubric	Initiator	Lot	Ref	Number	Revision
93M	0407	AAC	60L11	DWG	90431	A

Tekla structures

All holes are 22mm U.N.O Length & Area & Weight per piece						
b18	PL12*360	S355J2N	1	2599.8	1.94	87.9
Mark	Profile	Grade	QTY	Length	Area	Weight

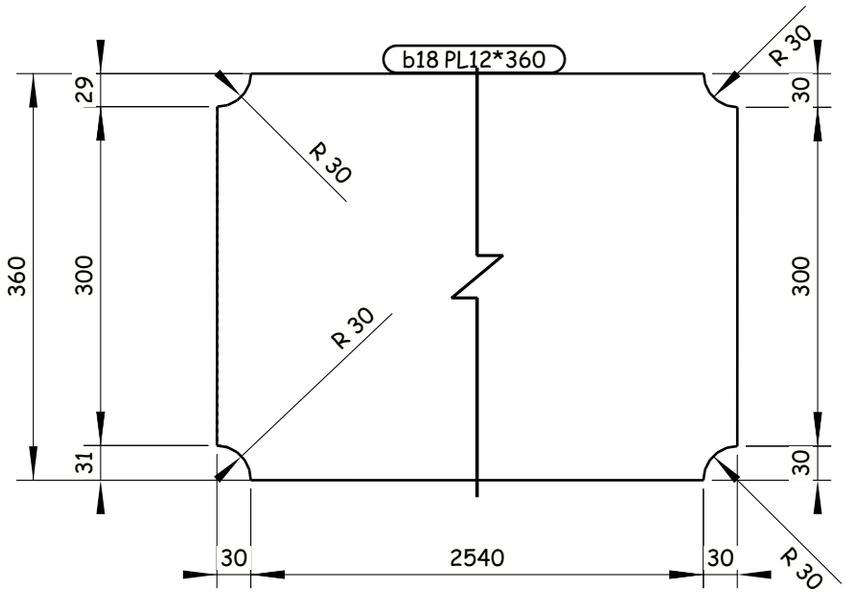

-Drawing shall be updated according to the comments on the GA drawing.
-Approval is subjected to the approval of coordination package between multi-discipline.

REVIEWED WITH COMMENT MONORAILS PROJECT

1 REQUIRED AS DRAWN E.SH b18

6 October Monorail Engineering Unit
Valid For Construction

Tekla structures

GENERAL NOTES:

1. ALL DIMENSIONS ARE IN MILLIMETERS UNLESS OTHERWISE SPECIFIED.
2. LEVELS ARE IN METERS
3. DESIGN SERVICE LIFE OF 100 YEARS.
4. FLANGES OF TOP AND BOTTOM CHORDS TO BE SUPPLIED WITH IMPROVED THROUGH THICKNESS PROPERTIES Z25 ACCORDING TO EN10164.

REFERENCE DRAWINGS

1	93M-0407-SEN-6OL11-END-10118-B PAGE 01:17
2	
3	
4	
5	
6	
7	
8	
9	
10	
11	

6TH OF OCTOBER CITY RAIL TRANSIT MONORAIL & NEW CAPITAL CITY RAIL TRANSIT MONORAIL

The Authority — Authority Consultant: Hill International — Main Contractor: ORASCOM CONSTRUCTION — Designer: BOMBARDIER, SENER, SHAKER

CONTRACTOR / CONSULTANT: ENGINEERING HOUSE FOR CONSULTANCY

SCALE: AS SHOWN | SHOP DRAWING | DATE: 20.11.2024

DRAWING TITLE:
6TH OF OCTOBER MONORAIL
SHOP DRAWING FOR BRIDGE 6OL11-37
STEEL TRUSS (II).
b18

REV	DATE	BY	DESCRIPTION	CHK	APD
A	20-11-24	E.SH	ISSUE FOR APPROVAL	A.SH	M.M

Project Code	Rubric	Initiator	Lot	Ref	Number	Revision
93M	0407	AAC	60L11	DWG	90432	A

All holes are 22mm U.N.O Length & Area & Weight per piece

Mark	Profile	Grade	QTY	Length	Area	Weight
p2	PL10*196.8	S355J2N	2	254.3	0.09	3.1

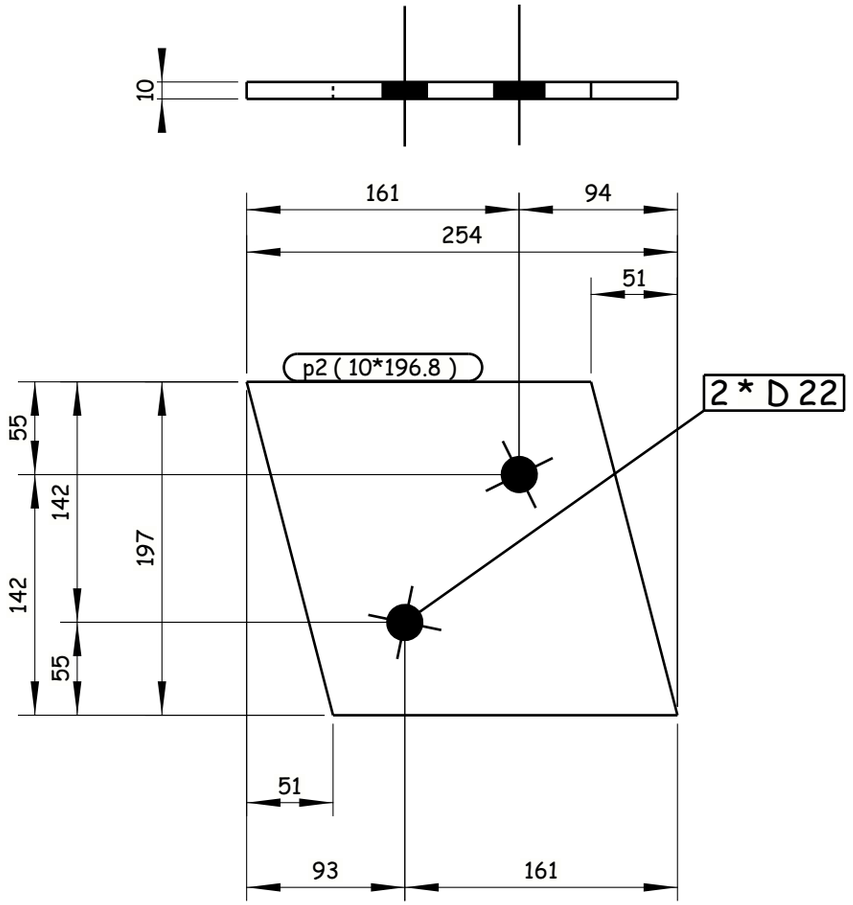

-Drawing shall be updated according to the comments on the GA drawing.
-Approval is subjected to the approval of coordination package between multi-discipline.

REVIEWED WITH COMMENT
MONORAILS PROJECT

2 REQUIRED AS DRAWN E.SH p2

Tekla structures

GENERAL NOTES:

1. ALL DIMENSIONS ARE IN MILLIMETERS UNLESS OTHERWISE SPECIFIED.
2. LEVELS ARE IN METERS
3. DESIGN SERVICE LIFE OF 100 YEARS.
4. FLANGES OF TOP AND BOTTOM CHORDS TO BE SUPPLIED WITH IMPROVED THROUGH THICKNESS PROPERTIES Z25 ACCORDING TO EN10164.

REFERENCE DRAWINGS

1	93M-0407-SEN-6OL11-END-10118-B PAGE 01:17
2	
3	
4	
5	
6	
7	
8	
9	
10	
11	

6TH OF OCTOBER CITY RAIL TRANSIT MONORAIL &
NEW CAPITAL CITY RAIL TRANSIT MONORAIL

The Authority
Hill International
Authority Consultant

ORASCOM CONSTRUCTION
BOMBARDIER
Main Contractor

SENER
SHAKER CONSULTANCY GROUP
Designer

CONTRACTOR & CONSULTANT:
ENGINEERING HOUSE FOR CONSULTANCY

SCALE: AS SHOWN
CHD DRAWING
DATE: 20.11.2024

6 October Monorail
Engineering Unit
Valid For Construction

REV	DATE	BY	DESCRIPTION	CHK	APD
A	20-11-24	E.SH	ISSUE FOR APPROVAL	A.SH	M.M

DRAWING TITLE:
6TH OF OCTOBER MONORAIL
SHOP DRAWING FOR BRIDGE 6OL11-37
STEEL TRUSS (II).
p2

Project Code	Rubric	Initiator	Lot	Ref	Number	Revision
9 3 M	0 4 0 7	A A C	6 0 L 1 1	D W G	90433	A

-Drawing shall be updated according to the comments on the GA drawing.
-Approval is subjected to the approval of coordination package between multi-discipline.

REVIEWED WITH COMMENT
MONORAILS PROJECT

All holes are 22mm U.N.O Length & Area & Weight per piece						
pl41	FLT40*600	S355J2N	4	1470.6	1.93	277.1
Mark	Profile	Grade	QTY	Length	Area	Weight

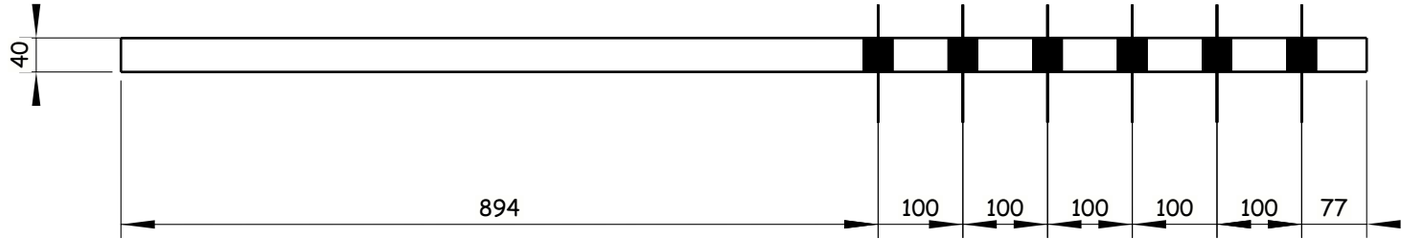

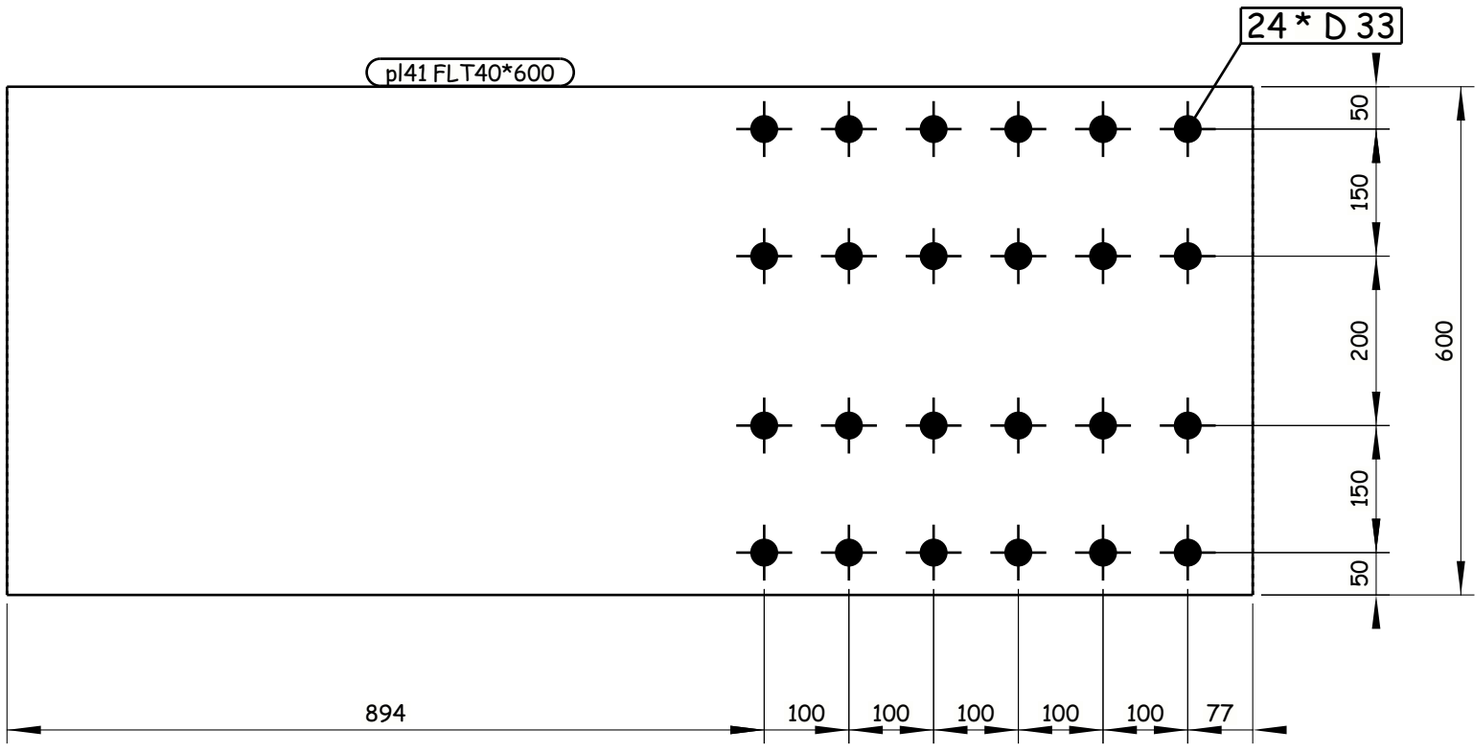

4 REQUIRED AS DRAWN E.SH pl41

6 October Monorail
Engineering Unit
Valid For Construction

GENERAL NOTES:
1. ALL DIMENSIONS ARE IN MILLIMETERS UNLESS OTHERWISE SPECIFIED.
2. LEVELS ARE IN METERS
3. DESIGN SERVICE LIFE OF 100 YEARS.
4. FLANGES OF TOP AND BOTTOM CHORDS TO BE SUPPLIED WITH IMPROVED THROUGH THICKNESS PROPERTIES Z25 ACCORDING TO EN10164.

REFERENCE DRAWINGS

1	93M-0407-SEN-6OL11-END-10118-B PAGE 01:17
2	
3	
4	
5	
6	
7	
8	
9	
10	
11	

6TH OF OCTOBER CITY RAIL TRANSIT MONORAIL &
NEW CAPITAL CITY RAIL TRANSIT MONORAIL

The Authority
Hill International
Authority Consultant

Main Contractor

Designer

CONTRACTOR & CONSULTANT:
ENGINEERING HOUSE FOR CONSULTANCY

SCALE: AS SHOWN | CHK'D DRAWING | DATE: 20.11.2024

REV	DATE	BY	DESCRIPTION	CHK	APD
A	20-11-24	E.SH	ISSUE FOR APPROVAL	A.SH	M.M

DRAWING TITLE:
6TH OF OCTOBER MONORAIL
SHOP DRAWING FOR BRIDGE 6OL11-37
STEEL TRUSS (II).
pl41

Project Code	Rubric	Initiator	Lot	Ref	Number	Revision
93M	0407	AAC	60L11	DWG	90434	A

Tekla structures

-Drawing shall be updated according to the comments on the GA drawing.
-Approval is subjected to the approval of coordination package between multi-discipline.

REVIEWED WITH COMMENT
MONORAILS PROJECT

All holes are 22mm U.N.O Length & Area & Weight per piece

Mark	Profile	Grade	QTY	Length	Area	Weight
pl42	PL40*700	S355J2N	4	1470.6	2.19	317.0

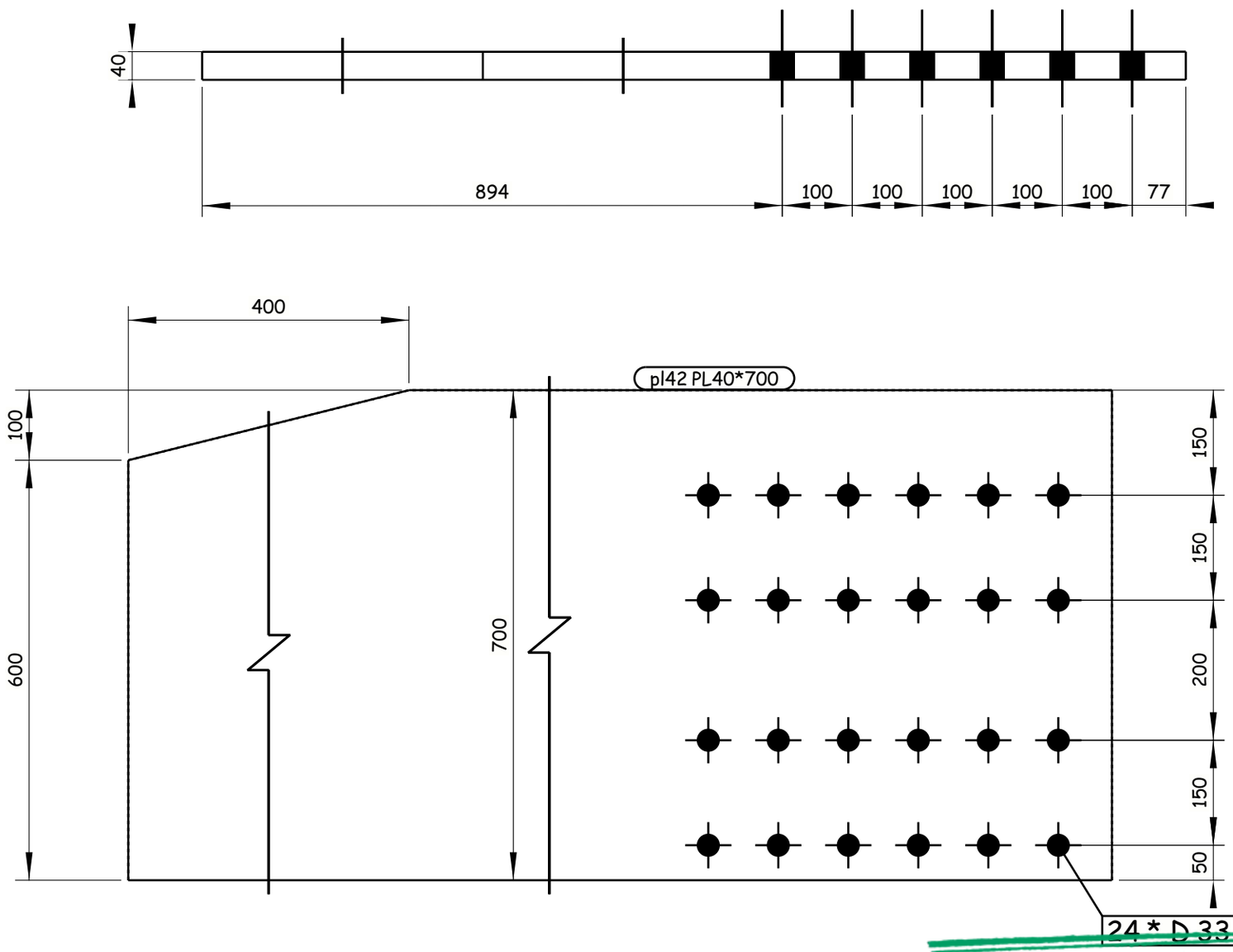

4 REQUIRED AS DRAWN E.SH pl42

Tekla structures

GENERAL NOTES:

1. ALL DIMENSIONS ARE IN MILLIMETERS UNLESS OTHERWISE SPECIFIED.
2. LEVELS ARE IN METERS
3. DESIGN SERVICE LIFE OF 100 YEARS.
4. FLANGES OF TOP AND BOTTOM CHORDS TO BE SUPPLIED WITH IMPROVED THROUGH THICKNESS PROPERTIES Z25 ACCORDING TO EN10164.

REFERENCE DRAWINGS

1	93M-0407-SEN-6OL11-END-10118-B PAGE 01:17
2	
3	
4	
5	
6	
7	
8	
9	
10	
11	

6TH OF OCTOBER CITY RAIL TRANSIT MONORAIL &
NEW CAPITAL CITY RAIL TRANSIT MONORAIL

The Authority — Hill International — Authority Consultant
ORASCOM CONSTRUCTION — BOMBARDIER — Main Contractor
SENER — SHAKER CONSULTANCY GROUP — Designer

CONTRACTOR & CONSULTANT:
ENGINEERING HOUSE FOR CONSULTANCY

SCALE	SHOP DRAWING	DATE
AS SHOWN		20.11.2024

REV	DATE	BY	DESCRIPTION	CHK	APD
A	20-11-24	E.SH	ISSUE FOR APPROVAL	A.SH	M.M

6 October Monorail
Engineering Unit
Valid For Construction

DRAWING TITLE:
6TH OF OCTOBER MONORAIL
SHOP DRAWING FOR BRIDGE 6OL11-37
STEEL TRUSS (II).
pl42

Project Code	Rubric	Initiator	Lot	Ref	Number	Revision
93M	0407	AAC	60L11	DWG	90435	A

-Drawing shall be updated according to the comments on the GA drawing.
-Approval is subjected to the approval of coordination package between multi-discipline.

REVIEWED WITH COMMENT
MONORAILS PROJECT

All holes are 22mm U.N.O Length & Area & Weight per piece

Mark	Profile	Grade	QTY	Length	Area	Weight
pl43	FLT40*600	S355J2N	4	2094.8	2.73	368.4

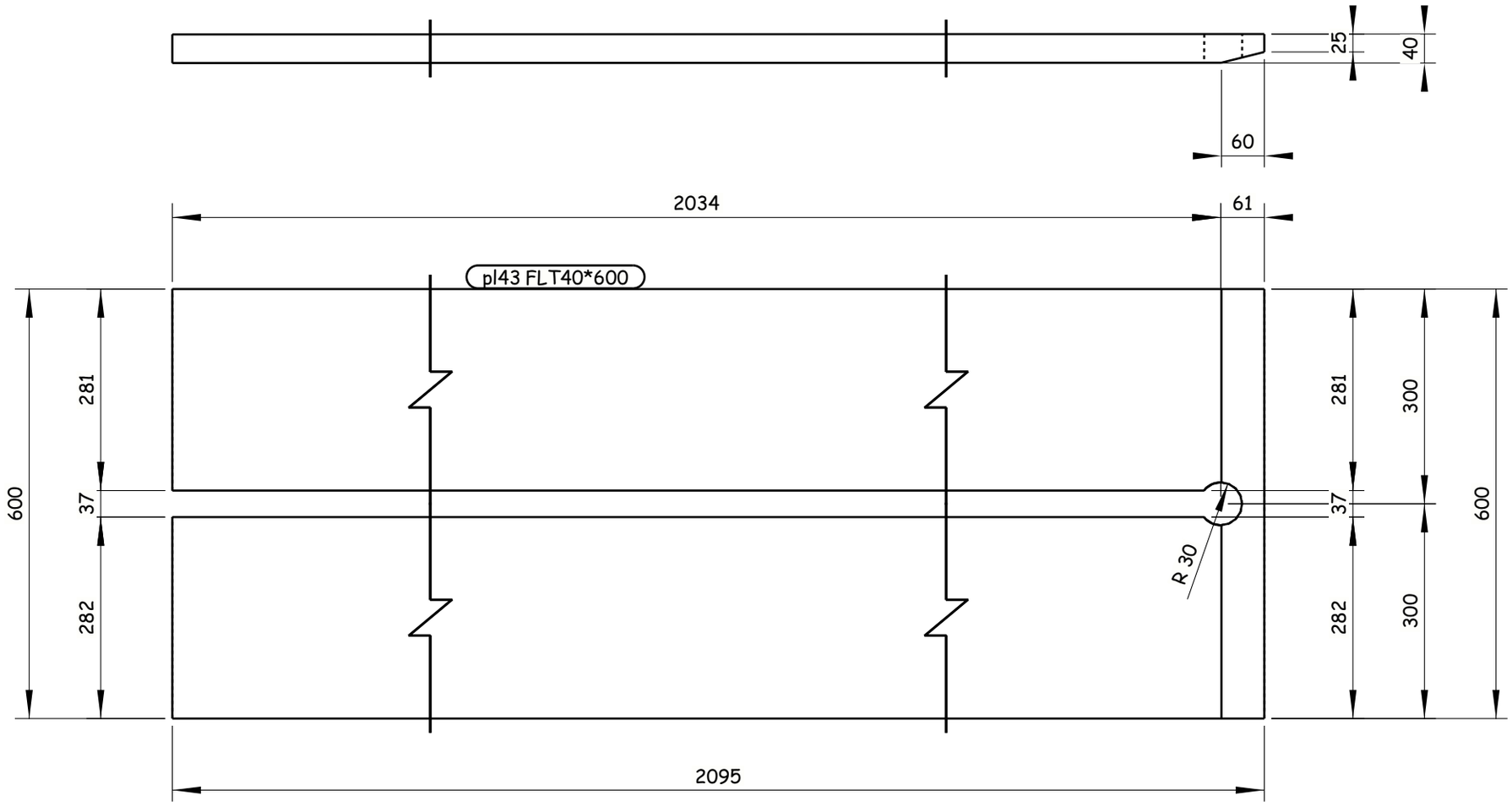

4 REQUIRED AS DRAWN E.SH pl43

GENERAL NOTES:

1. ALL DIMENSIONS ARE IN MILLIMETERS UNLESS OTHERWISE SPECIFIED.
2. LEVELS ARE IN METERS
3. DESIGN SERVICE LIFE OF 100 YEARS.
4. FLANGES OF TOP AND BOTTOM CHORDS TO BE SUPPLIED WITH IMPROVED THROUGH THICKNESS PROPERTIES Z25 ACCORDING TO EN10164.

REFERENCE DRAWINGS

1	93M-0407-SEN-6OL11-END-10118-B PAGE 01:17
2	
3	
4	
5	
6	
7	
8	
9	
10	
11	

6TH OF OCTOBER CITY RAIL TRANSIT MONORAIL &
NEW CAPITAL CITY RAIL TRANSIT MONORAIL

The Authority
Hill International
Authority Consultant

ORASCOM CONSTRUCTION
Main Contractor

BOMBARDIER
SENER
SHAKER CONSULTANCY GROUP
Designer

CONTRACTOR / CONSULTANT :
ENGINEERING HOUSE FOR CONSULTANCY

SCALE AS SHOWN | CHD DRAWING | DATE 20.11.2024

REV	DATE	BY	DESCRIPTION	CHK	APD
A	20-11-24	E.SH	ISSUE FOR APPROVAL	A.SH	M.M

6 October Monorail
Engineering Unit
Valid For Construction

DRAWING TITLE:
6TH OF OCTOBER MONORAIL
SHOP DRAWING FOR BRIDGE 6OL11-37
STEEL TRUSS (II).
pl43

Project Code	Rubric	Initiator	Lot	Ref	Number	Revision
9 3 M	0 4 0 7	A A C	6 0 L 1 1	D W G	90436	A

Tekla structures

-Drawing shall be updated according to the comments on the GA drawing.
-Approval is subjected to the approval of coordination package between multi-discipline.

REVIEWED WITH COMMENT
MONORAILS PROJECT

All holes are 22mm U.N.O Length & Area & Weight per piece

Mark	Profile	Grade	QTY	Length	Area	Weight
pl44	FLT40*600	S355J2N	4	2095.4	2.73	371.6

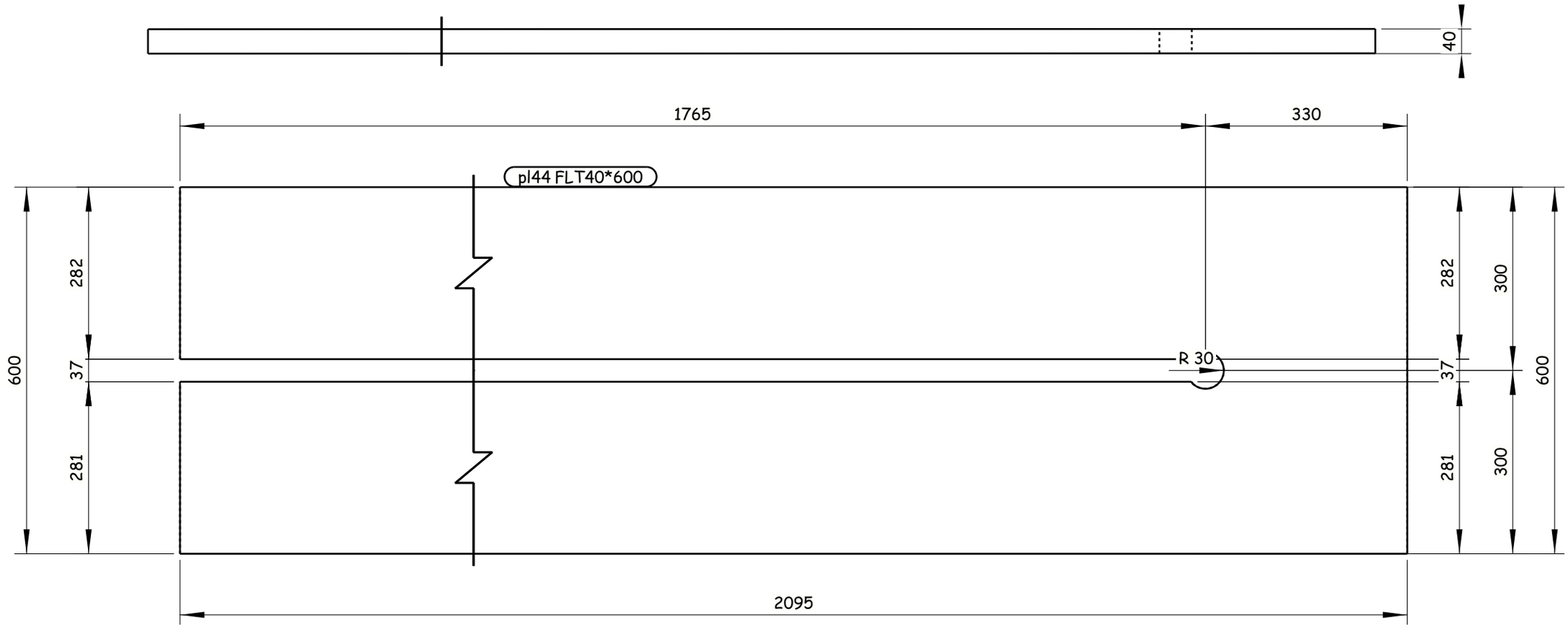

4 REQUIRED AS DRAWN E.SH pl44

GENERAL NOTES:

1. ALL DIMENSIONS ARE IN MILLIMETERS UNLESS OTHERWISE SPECIFIED.
2. LEVELS ARE IN METERS
3. DESIGN SERVICE LIFE OF 100 YEARS.
4. FLANGES OF TOP AND BOTTOM CHORDS TO BE SUPPLIED WITH IMPROVED THROUGH THICKNESS PROPERTIES Z25 ACCORDING TO EN10164.

REFERENCE DRAWINGS

1	93M-0407-SEN-6OL11-END-10118-B PAGE 01:17
2	
3	
4	
5	
6	
7	
8	
9	
10	
11	

6TH OF OCTOBER CITY RAIL TRANSIT MONORAIL &
NEW CAPITAL CITY RAIL TRANSIT MONORAIL

The Authority — Hill International Authority Consultant — Main Contractor — Designer

CONTRACTOR / CONSULTANT : ENGINEERING HOUSE FOR CONSULTANCY

SCALE: AS SHOWN | SHOP DRAWING | DATE: 20.11.2024

REV	DATE	BY	DESCRIPTION	CHK	APD
A	20-11-24	E.SH	ISSUE FOR APPROVAL	A.SH	M.M

6 October Monorail
Engineering Unit
Valid For Construction

DRAWING TITLE:
6TH OF OCTOBER MONORAIL
SHOP DRAWING FOR BRIDGE 6OL11-37
STEEL TRUSS (II).
pl44

Project Code	Rubric	Initiator	Lot	Ref	Number	Revision
93M	407	AAC	60L11	DWG	90437	A

Tekla structures

-Drawing shall be updated according to the comments on the GA drawing.
-Approval is subjected to the approval of coordination package between multi-discipline.

REVIEWED WITH COMMENT
MONORAILS PROJECT

All holes are 22mm U.N.O Length & Area & Weight per piece						
w1	PL35*1614.4	S355J2N	2	2810.0	7.20	937.7
Mark	Profile	Grade	QTY	Length	Area	Weight

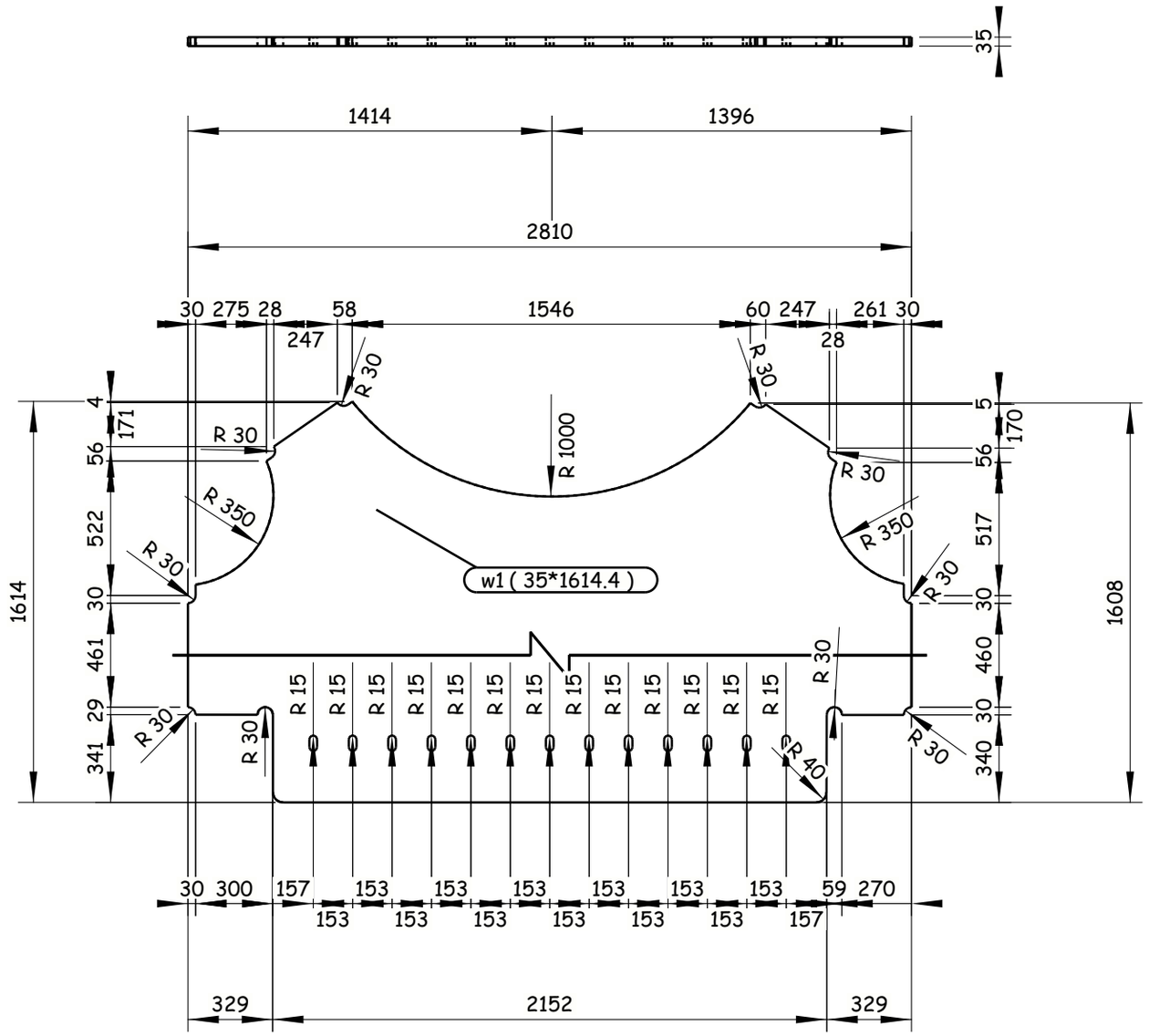

2 REQUIRED AS DRAWN E.SH w1

6 October Monorail
Engineering Unit
Valid For Construction

GENERAL NOTES:

1. ALL DIMENSIONS ARE IN MILLIMETERS UNLESS OTHERWISE SPECIFIED.
2. LEVELS ARE IN METERS
3. DESIGN SERVICE LIFE OF 100 YEARS.
4. FLANGES OF TOP AND BOTTOM CHORDS TO BE SUPPLIED WITH IMPROVED THROUGH THICKNESS PROPERTIES Z25 ACCORDING TO EN10164.

REFERENCE DRAWINGS

1	93M-0407-SEN-6OL11-END-10118-B PAGE 01:17
2	
3	
4	
5	
6	
7	
8	
9	
10	
11	

6TH OF OCTOBER CITY RAIL TRANSIT MONORAIL &
NEW CAPITAL CITY RAIL TRANSIT MONORAIL

The Authority — Hill International Authority Consultant
Main Contractor: ORASCOM CONSTRUCTION, BOMBARDIER
Designer: SENER, SHAKER CONSULTANCY GROUP

CONTRACTOR / CONSULTANT: EHC ENGINEERING HOUSE FOR CONSULTANCY

SCALE: AS SHOWN | SHD DRAWING | DATE: 20.11.2024

DRAWING TITLE:
6TH OF OCTOBER MONORAIL
SHOP DRAWING FOR BRIDGE 6OL11-37
STEEL TRUSS (II).
w1

REV	DATE	BY	DESCRIPTION	CHK	APD
A	20-11-24	E.SH	ISSUE FOR APPROVAL	A.SH	M.M

Project Code	Rubric	Initiator	Lot	Ref	Number	Revision
9 3 M 0	4 0 7	A A C	6 0 L 1 1	D W G	90438	A

Tekla structures

-Drawing shall be updated according to the comments on the GA drawing.
-Approval is subjected to the approval of coordination package between multi-discipline.

REVIEWED WITH COMMENT
MONORAILS PROJECT

All holes are 22mm U.N.O Length & Area & Weight per piece

Mark	Profile	Grade	QTY	Length	Area	Weight
w2	PL35*1616.8	S355J2N	2	2810.0	7.20	937.7

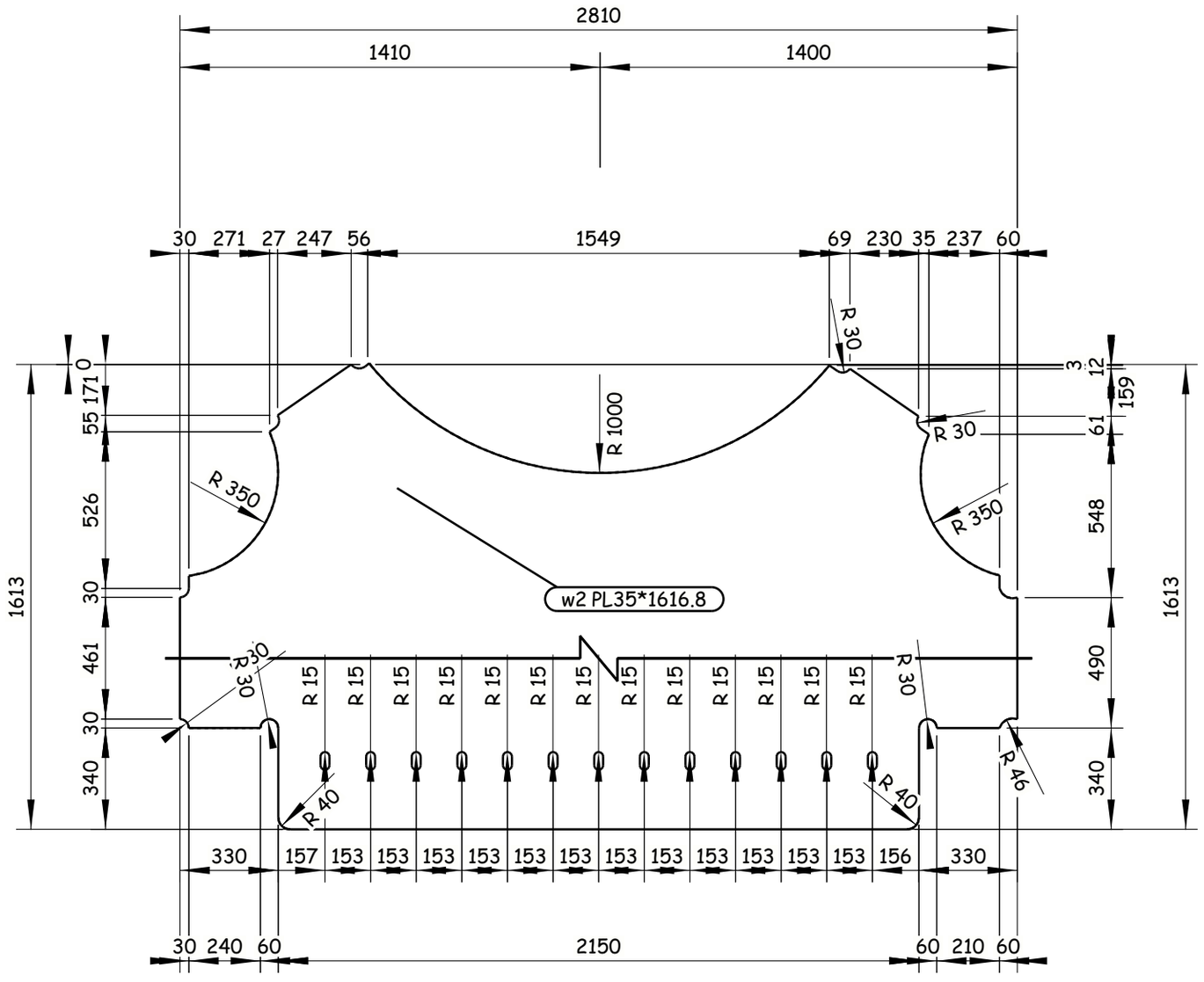

2 REQUIRED AS DRAWN E.SH w2

GENERAL NOTES:

1. ALL DIMENSIONS ARE IN MILLIMETERS UNLESS OTHERWISE SPECIFIED.
2. LEVELS ARE IN METERS
3. DESIGN SERVICE LIFE OF 100 YEARS.
4. FLANGES OF TOP AND BOTTOM CHORDS TO BE SUPPLIED WITH IMPROVED THROUGH THICKNESS PROPERTIES Z25 ACCORDING TO EN10164.

REFERENCE DRAWINGS

1	93M-0407-SEN-6OL11-END-10118-B PAGE 01:17
2	
3	
4	
5	
6	
7	
8	
9	
10	
11	

6TH OF OCTOBER CITY RAIL TRANSIT MONORAIL &
NEW CAPITAL CITY RAIL TRANSIT MONORAIL

The Authority
Hill International
Authority Consultant

ORASCOM CONSTRUCTION
BOMBARDIER
Main Contractor

SENER
SHAKER CONSULTANCY GROUP
Designer

CONTRACTOR
CONSULTANT :
ENGINEERING HOUSE FOR CONSULTANCY

6 October Monorail
Engineering Unit
Valid For Construction

SCALE	SHOP DRAWING	DATE
AS SHOWN		20.11.2024

DRAWING TITLE:
6TH OF OCTOBER MONORAIL
SHOP DRAWING FOR BRIDGE 6OL11-37
STEEL TRUSS (II).
w2

REV	DATE	BY	DESCRIPTION	CHK	APD
A	20-11-24	E.SH	ISSUE FOR APPROVAL	A.SH	M.M

Project Code	Rubric	Initiator	Lot	Ref	Number	Revision
93M	0407	AAC	60 L11	DWG	90439	A

Tekla structures

-Drawing shall be updated according to the comments on the GA drawing.
-Approval is subjected to the approval of coordination package between multi-discipline.

REVIEWED WITH COMMENT
MONORAILS PROJECT

All holes are 22mm U.N.O Length & Area & Weight per piece

Mark	Profile	Grade	QTY	Length	Area	Weight
w3	PL35*1636.7	S355J2N	4	2812.9	7.28	949.0

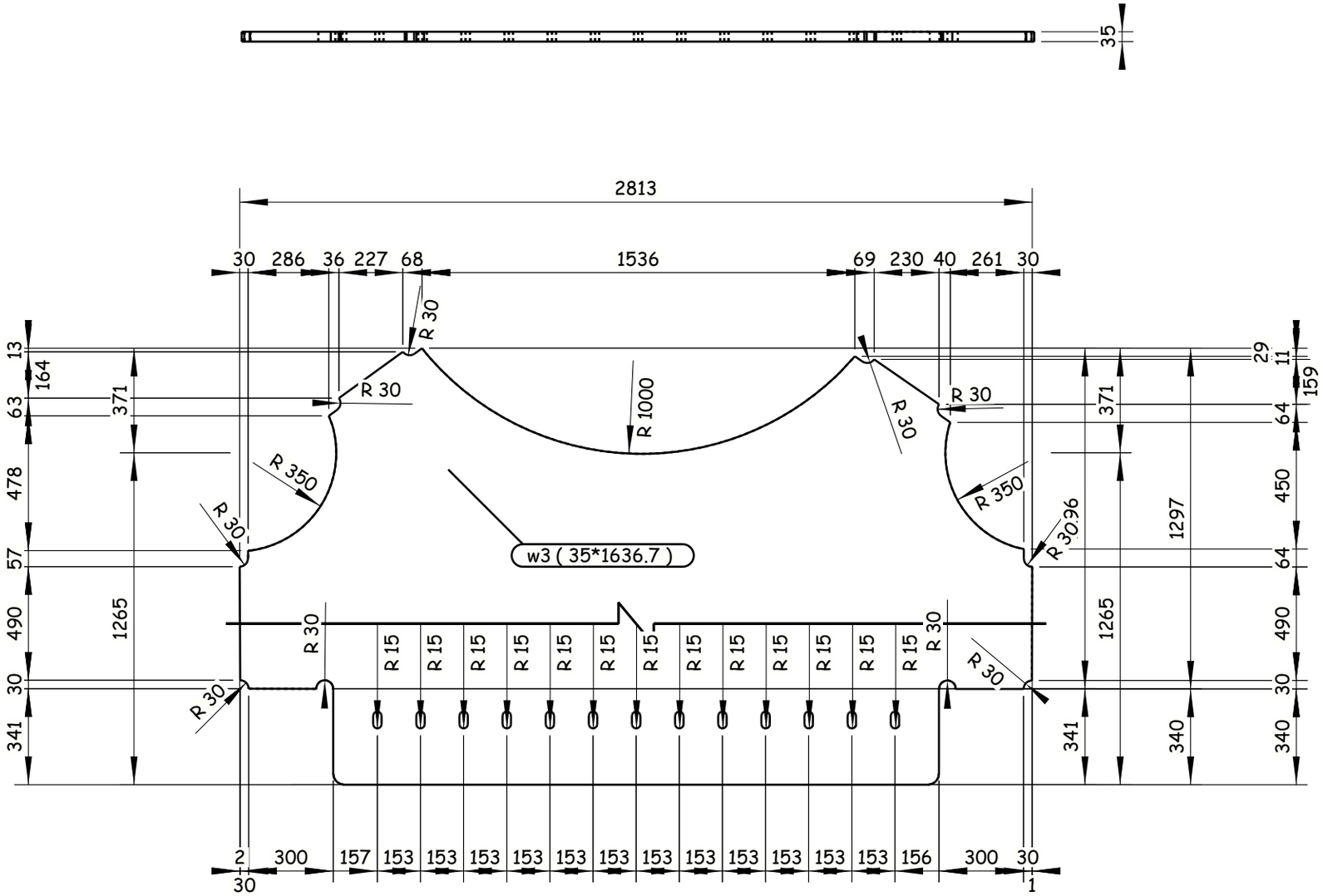

4 REQUIRED AS DRAWN E.SH w3

GENERAL NOTES:

1. ALL DIMENSIONS ARE IN MILLIMETERS UNLESS OTHERWISE SPECIFIED.
2. LEVELS ARE IN METERS
3. DESIGN SERVICE LIFE OF 100 YEARS.
4. FLANGES OF TOP AND BOTTOM CHORDS TO BE SUPPLIED WITH IMPROVED THROUGH THICKNESS PROPERTIES Z25 ACCORDING TO EN10164.

REFERENCE DRAWINGS

1	93M-0407-SEN-6OL11-END-10118-B PAGE 01:17
2	
3	
4	
5	
6	
7	
8	
9	
10	
11	

6TH OF OCTOBER CITY RAIL TRANSIT MONORAIL &
NEW CAPITAL CITY RAIL TRANSIT MONORAIL

The Authority — Authority Consultant
Hill International
ORASCOM CONSTRUCTION — Main Contractor
BOMBARDIER
SENER / SHAKER CONSULTANCY GROUP — Designer

CONTRACTOR & CONSULTANT:
ENGINEERING HOUSE FOR CONSULTANCY

SCALE	SHOP DRAWING	DATE
AS SHOWN		20.11.2024

REV	DATE	BY	DESCRIPTION	CHK	APD
A	20-11-24	E.SH	ISSUE FOR APPROVAL	A.SH	M.M

6 October Monorail
Engineering Unit
Valid For Construction

DRAWING TITLE:
6TH OF OCTOBER MONORAIL
SHOP DRAWING FOR BRIDGE 6OL11-37
STEEL TRUSS (II).
w3

Project Code	Rubric	Initiator	Lot	Ref	Number	Revision
93M	0407	AAC	60L11	DWG	90440	A

Tekla structures

-Drawing shall be updated according to the comments on the GA drawing.
-Approval is subjected to the approval of coordination package between multi-discipline.

REVIEWED WITH COMMENT
MONORAILS PROJECT

All holes are 22mm U.N.O Length & Area & Weight per piece

Mark	Profile	Grade	QTY	Length	Area	Weight
w4	PL35*1636.3	S355J2N	4	2812.9	7.29	951.2

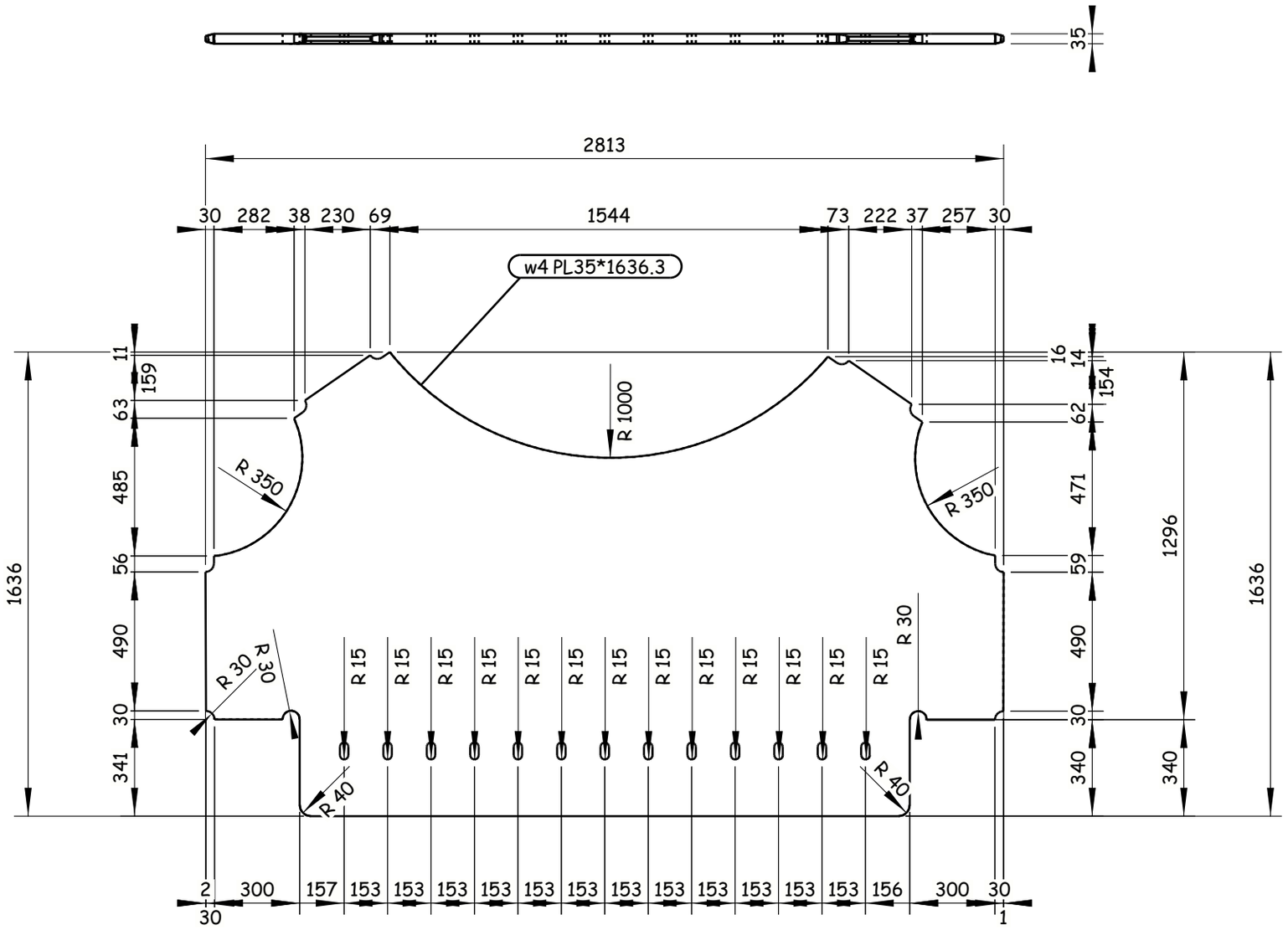

4 REQUIRED AS DRAWN E.SH w4

6 October Monorail
Engineering Unit
Valid For Construction

Tekla structures

GENERAL NOTES:

1. ALL DIMENSIONS ARE IN MILLIMETERS UNLESS OTHERWISE SPECIFIED.
2. LEVELS ARE IN METERS
3. DESIGN SERVICE LIFE OF 100 YEARS.
4. FLANGES OF TOP AND BOTTOM CHORDS TO BE SUPPLIED WITH IMPROVED THROUGH THICKNESS PROPERTIES Z25 ACCORDING TO EN10164.

REFERENCE DRAWINGS

1	93M-0407-SEN-6OL11-END-10118-B PAGE 01:17
2	
3	
4	
5	
6	
7	
8	
9	
10	
11	

6TH OF OCTOBER CITY RAIL TRANSIT MONORAIL &
NEW CAPITAL CITY RAIL TRANSIT MONORAIL

The Authority — Authority Consultant
Hill International
ORASCOM CONSTRUCTION — BOMBARDIER — Main Contractor
SENER — SHAKER CONSULTANCY GROUP — Designer

CONTRACTOR & CONSULTANT:
ENGINEERING HOUSE FOR CONSULTANCY

SCALE: AS SHOWN | SHOP DRAWING | DATE: 20.11.2024

REV	DATE	BY	DESCRIPTION	CHK	APD
A	20-11-24	E.SH	ISSUE FOR APPROVAL	A.SH	M.M

DRAWING TITLE:
6TH OF OCTOBER MONORAIL
SHOP DRAWING FOR BRIDGE 6OL11-37
STEEL TRUSS (II).
w4

Project Code	Rubric	Initiator	Lot	Ref	Number	Revision
9 3	M 0 4 0 7	A A C	6 0 L 1 1	D W G	90441	A

-Drawing shall be updated according to the comments on the GA drawing.
-Approval is subjected to the approval of coordination package between multi-discipline.

REVIEWED WITH COMMENT
MONORAILS PROJECT

All holes are 22mm U.N.O Length & Area & Weight per piece

Mark	Profile	Grade	QTY	Length	Area	Weight
w5	PL35*1617.7	S355J2N	2	2810.0	7.20	937.7

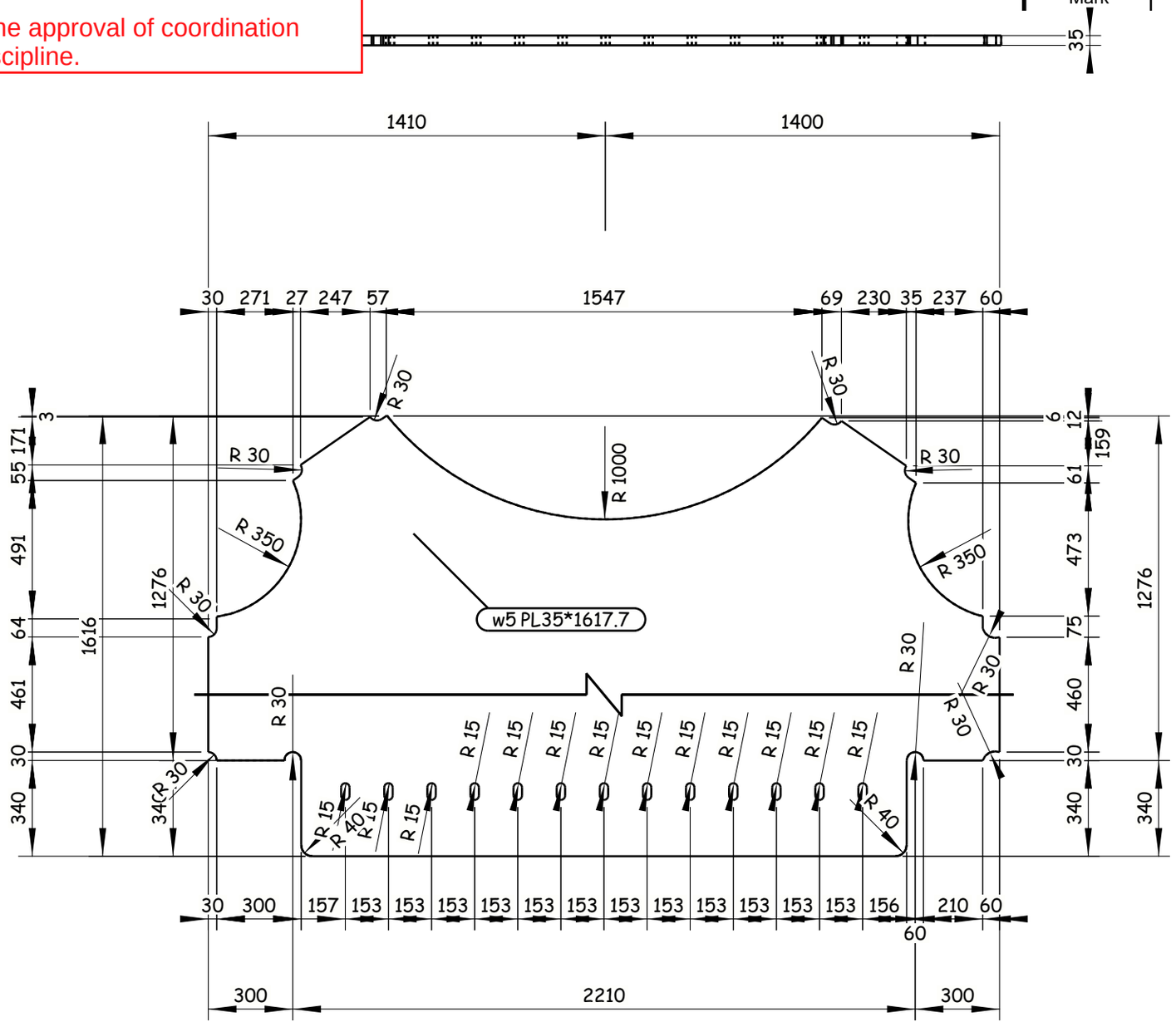

2 REQUIRED AS DRAWN E.SH w5

6 October Monorail
Engineering Unit
Valid For Construction

GENERAL NOTES:
1. ALL DIMENSIONS ARE IN MILLIMETERS UNLESS OTHERWISE SPECIFIED.
2. LEVELS ARE IN METERS
3. DESIGN SERVICE LIFE OF 100 YEARS.
4. FLANGES OF TOP AND BOTTOM CHORDS TO BE SUPPLIED WITH IMPROVED THROUGH THICKNESS PROPERTIES Z25 ACCORDING TO EN10164.

REFERENCE DRAWINGS

1	93M-0407-SEN-6OL11-END-10118-B PAGE 01:17
2	
3	
4	
5	
6	
7	
8	
9	
10	
11	

6TH OF OCTOBER CITY RAIL TRANSIT MONORAIL &
NEW CAPITAL CITY RAIL TRANSIT MONORAIL

The Authority — Hill International Authority Consultant
Main Contractor: ORASCOM CONSTRUCTION / BOMBARDIER
Designer: SENER / SHAKER CONSULTANCY GROUP

CONTRACTOR / CONSULTANT: ENGINEERING HOUSE FOR CONSULTANCY

SCALE: AS SHOWN | CHD DRAWING | DATE: 20.11.2024

REV	DATE	BY	DESCRIPTION	CHK	APD
A	20-11-24	E.SH	ISSUE FOR APPROVAL	A.SH	M.M

DRAWING TITLE:
6TH OF OCTOBER MONORAIL
SHOP DRAWING FOR BRIDGE 6OL11-37
STEEL TRUSS (II).
w5

Project Code	Rubric	Initiator	Lot	Ref	Number	Revision
93M	0407	AAC	60L11	DWG	90442	A

Tekla structures

All holes are 22mm U.N.O Length & Area & Weight per piece						
w6	PL35*1612.9	S355J2N	4	2810.0	7.20	937.3
Mark	Profile	Grade	QTY	Length	Area	Weight

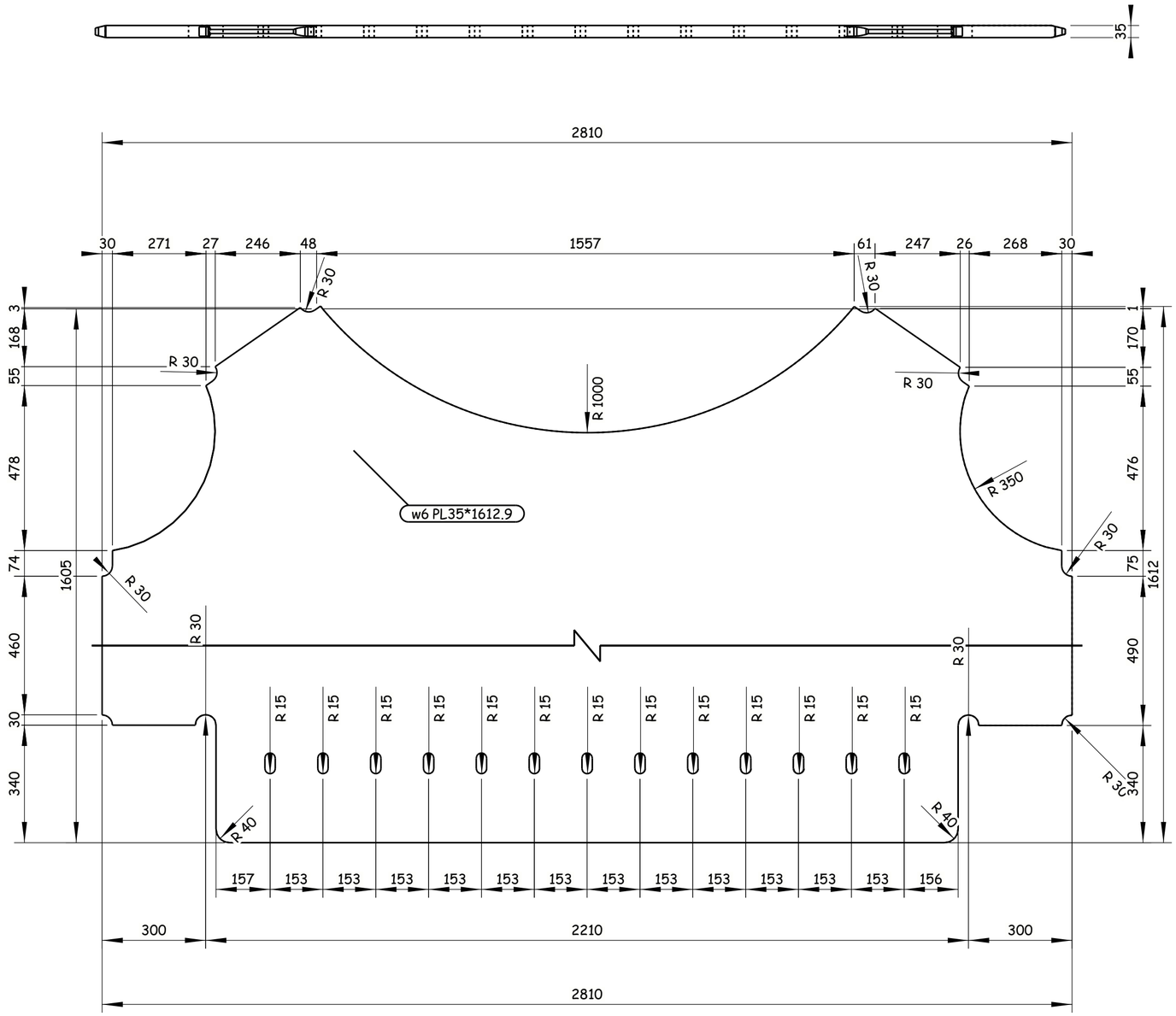

-Drawing shall be updated according to the comments on the GA drawing.
-Approval is subjected to the approval of coordination package between multi-discipline.

REVIEWED WITH COMMENT MONORAILS PROJECT

4 REQUIRED AS DRAWN E.SH w6

Tekla structures

GENERAL NOTES:

1. ALL DIMENSIONS ARE IN MILLIMETERS UNLESS OTHERWISE SPECIFIED.
2. LEVELS ARE IN METERS
3. DESIGN SERVICE LIFE OF 100 YEARS.
4. FLANGES OF TOP AND BOTTOM CHORDS TO BE SUPPLIED WITH IMPROVED THROUGH THICKNESS PROPERTIES Z25 ACCORDING TO EN10164.

REFERENCE DRAWINGS

1	93M-0407-SEN-6OL11-END-10118-B PAGE 01:17
2	
3	
4	
5	
6	
7	
8	
9	
10	
11	

6TH OF OCTOBER CITY RAIL TRANSIT MONORAIL & NEW CAPITAL CITY RAIL TRANSIT MONORAIL

The Authority — Hill International Authority Consultant — ORASCOM CONSTRUCTION — BOMBARDIER — Main Contractor — SENER SHAKER CONSULTANCY GROUP — Designer

CONTRACTOR CONSULTANT: ENGINEERING HOUSE FOR CONSULTANCY

SCALE: AS SHOWN | SHOP DRAWING | DATE: 20.11.2024

6 October Monorail Engineering Unit Valid For Construction

DRAWING TITLE:
6TH OF OCTOBER MONORAIL
SHOP DRAWING FOR BRIDGE 6OL11-37
STEEL TRUSS (II).
w6

REV	DATE	BY	DESCRIPTION	CHK	APD
A	20-11-24	E.SH	ISSUE FOR APPROVAL	A.SH	M.M

Project Code	Rubric	Initiator	Lot	Ref	Number	Revision
93M	0407	AAC	60L11	DWG	90443	A

All holes are 22mm U.N.O Length & Area & Weight per piece						
w7	PL35*1614.4	S355J2N	2	2810.2	7.20	937.0
Mark	Profile	Grade	QTY	Length	Area	Weight

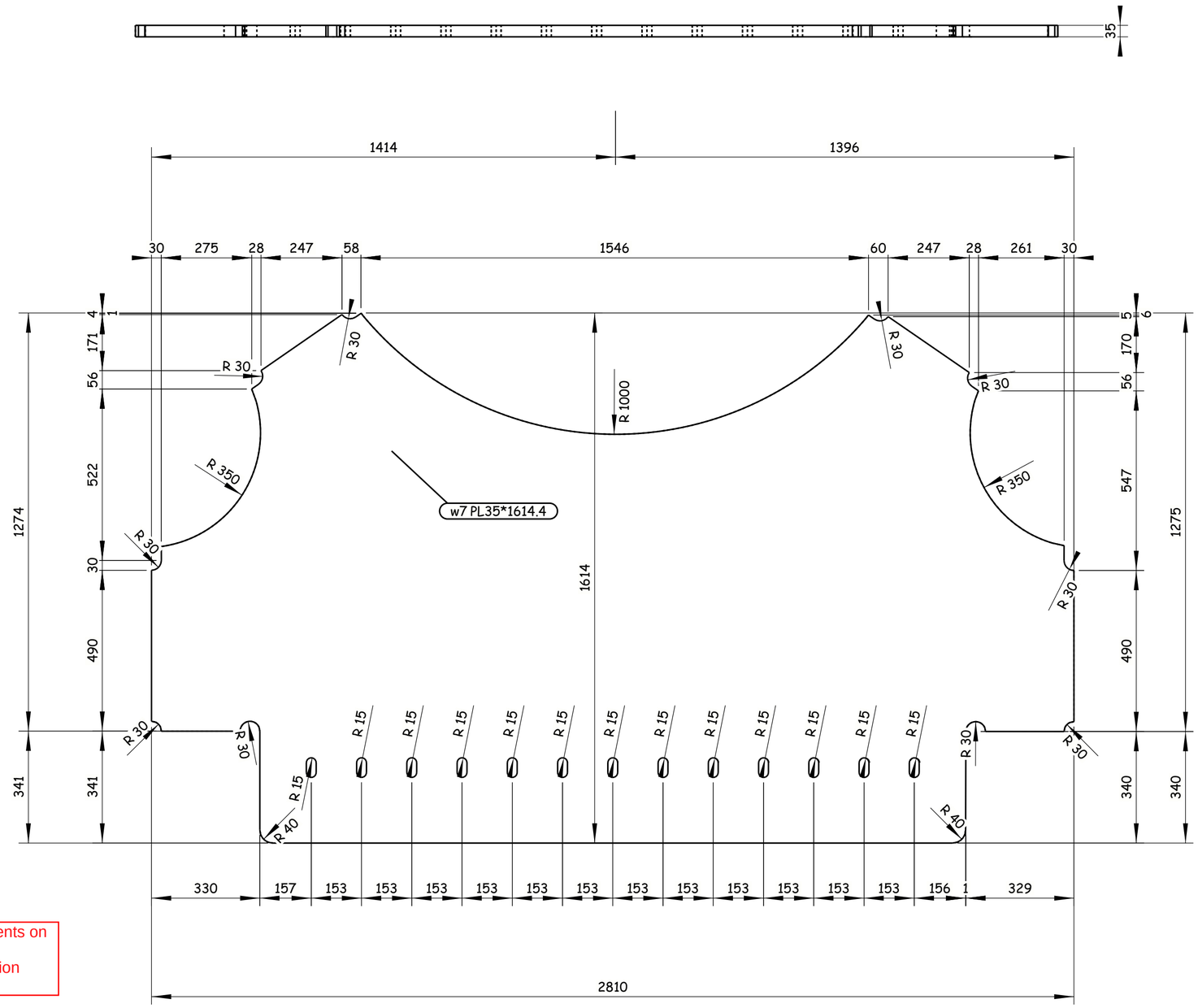

-Drawing shall be updated according to the comments on the GA drawing.
-Approval is subjected to the approval of coordination package between multi-discipline.

REVIEWED WITH COMMENT MONORAILS PROJECT

2 REQUIRED AS DRAWN E.SH w7

Tekla structures

GENERAL NOTES:

1. ALL DIMENSIONS ARE IN MILLIMETERS UNLESS OTHERWISE SPECIFIED.
2. LEVELS ARE IN METERS
3. DESIGN SERVICE LIFE OF 100 YEARS.
4. FLANGES OF TOP AND BOTTOM CHORDS TO BE SUPPLIED WITH IMPROVED THROUGH THICKNESS PROPERTIES Z25 ACCORDING TO EN10164.

REFERENCE DRAWINGS

1	93M-0407-SEN-6OL11-END-10118-B PAGE 01:17
2	
3	
4	
5	
6	
7	
8	
9	
10	
11	

6TH OF OCTOBER CITY RAIL TRANSIT MONORAIL & NEW CAPITAL CITY RAIL TRANSIT MONORAIL

The Authority — Hill International — Authority Consultant

Main Contractor

Designer

CONTRACTOR
CONSULTANT
ENGINEERING HOUSE FOR CONSULTANCY

REV	DATE	BY	DESCRIPTION	CHK	APD
A	20-11-24	E.SH	ISSUE FOR APPROVAL	A.SH	M.M

SCALE: AS SHOWN — SHOP DRAWING — DATE: 20.11.2024

6th of October Monorail — Engineering Unit — Valid For Construction

DRAWING TITLE:
6TH OF OCTOBER MONORAIL
SHOP DRAWING FOR BRIDGE 6OL11-37
STEEL TRUSS (II).
w7

Project Code	Rubric	Initiator	Lot	Ref	Number	Revision
9 3 M	0 4 0 7	A A C	6 0 L 1 1	D W G	90444	A